Digitized Automation for a Changing World

Delta Heavy Duty Vector Control Drive CH2000 Series User Manual

www.deltaww.com

Copyright notice

©Delta Electronics, Inc. All rights reserved.

All information contained in this user manual is the exclusive property of Delta Electronics Inc. (hereinafter referred to as "Delta ") and is protected by copyright law and all other laws. Delta retains the exclusive rights of this user manual in accordance with the copyright law and all other laws. No parts in this manual may be reproduced, transmitted, transcribed, translated or used in any other ways without the prior consent of Delta.

Limitation of Liability

The contents of this user manual are only for the use of the AC motor drives manufactured by Delta. Except as defined in special mandatory laws, Delta provides this user manual “as is” and does not offer any kind of warranty through this user manual for using the product, either express or implied, including but not limited to the following: (i) this product will meet your needs or expectations; (ii) the information contained in the product is current and correct; (iii) the product does not infringe any rights of any other person. You shall bear your own risk to use this product.

In no event shall Delta, its subsidiaries, affiliates, managers, employees, agents, partners and licensors be liable for any direct, indirect, incidental, special, derivative or consequential damages (including but not limited to the damages for loss of profits, goodwill, use or other intangible losses) unless the laws contains special mandatory provisions to the contrary.

Delta reserves the right to make changes to the user manual and the products described in the user manual without prior notice and afterwards.

READ PRIOR TO INSTALLATION FOR SAFETY.

DANGER

- ☑ Disconnect AC input power before connecting any wiring to the AC motor drive.
- ☑ When wiring, turn off the AC motor drive power first. It takes a certain time for the internal DC capacitor to discharge. A charge may still remain in the DC link capacitors with hazardous voltages before the POWER LED is OFF. Do NOT touch the internal circuits and components. To avoid damage, use a voltmeter for testing. Wiring only after the voltage is lower than the safety voltage value of 25 V_{DC}. If the AC motor drive does not fully discharge, there will be residual voltage inside. Any wiring at this time causes short-circuit and fire. It is strongly suggested to operate the wiring under no-voltage conditions to ensure personnel safety.
- ☑ There are highly sensitive MOS components on the printed circuit boards. These components are especially sensitive to static electricity. Take anti-static measure before touching these components or the circuit boards.
- ☑ Never modify the internal components or wiring.
- ☑ Ground the AC motor drive by using the ground terminal. The grounding method must comply with the laws of the country where the AC motor drive is to be installed.
- ☑ Do NOT install the AC motor drive in a location with high temperature, direct sunlight or inflammable materials or gases.

CAUTION

- ☑ Never connect the AC motor drive output terminals U/T1, V/T2 and W/T3 directly to the AC mains circuit power supply.
- ☑ After finishing the wiring of the AC motor drive, check if R/L1, S/L2, and T/L3 are short-circuited to ground with a multimeter. Do NOT power the drive if short circuits occur. Eliminate the short circuits before the drive is powered.
- ☑ The rated voltage of power system to install motor drives is listed below. Ensure that the installation voltage is in the correct range when installing a motor drive.
  1. For 230V models, the range is between 170–264V.
  2. For 460V models, the range is between 323–528V.
- ☑ Refer to the table below for short circuit rating:

Model (Power)	Short circuit rating
230V / 460V	100 kA

- ☑ Only qualified persons are allowed to install, wire and maintain the AC motor drives.
- ☑ Even if the three-phase AC motor is stopped, a charge with hazardous voltages may still remain in the main circuit terminals of the AC motor drive.
- ☑ The performance of electrolytic capacitor will degrade if it is not charged for a long time. It is recommended to charge the drive that is stored in no charge condition every 2 years for 3–4 hours to restore the performance of electrolytic capacitor in the motor drive. **NOTE:** When power up the motor drive, use adjustable AC power source (ex. AC autotransformer) to charge the drive at 70–80% of rated voltage for 30 minutes (do not run the motor drive). Then charge the drive at 100% of rated voltage for an hour (do not run the motor drive). By doing these, restore the performance of electrolytic capacitor before starting to run the motor drive. Do NOT run the motor drive at 100% rated voltage right away.
- ☑ Pay attention to the following precautions when transporting and installing this package (including wooden crate and wood stave)
  1. If you need to deworm the wooden crate, do NOT use fumigation or you will damage the drive. Any damage to the drive caused by using fumigation voids the warranty.
  2. Use other methods, such as heat treatment or any other non-fumigation treatment, to deworm the wood packaging material.
  3. If you use heat treatment to deworm, leave the packaging materials in an environment of over 56°C for a minimum of thirty minutes.
- ☑ Connect the drive to a three-phase three-wire or three-phase four-wire Wye system to comply with UL standards.

	☑ If the motor drive generates leakage current over AC 3.5 mA or over DC 10 mA on a grounding conductor, compliance with local grounding regulations or IEC61800-5-1 standard is the minimum requirement for grounding.

NOTE: The content of this manual may be revised without prior notice. Consult our distributors or download the latest version at http://www.deltaww.com/iadownload_acmotordrive

Table of Contents

Chapter 1 Introduction 1-1

1-1 Nameplate Information 1-2

1-2 Model Name 1-3

1-3 Serial Number 1-4

1-4 Apply After Service by Mobile Device 1-5

1-5 RFI Jumper 1-6

1-6 Dimensions 1-9

Chapter 2 Installation 2-1

2-1 Mounting Clearance 2-2

2-2 Airflow and Power Dissipation 2-5

Chapter 3 Unpacking 3-1

3-1 Unpacking 3-2

3-2 The Lifting Hook 3-15

Chapter 4 Wiring 4-1

4-1 System Wiring Diagram 4-3

4-2 Wiring 4-4

Chapter 5 Main Circuit Terminals 5-1

5-1 Main Circuit Diagram 5-4

5-2 Main Circuit Terminals 5-8

Chapter 6 Control Terminals 6-1

6-1 Remove the Cover for Wiring 6-4

6-2 Specifications of Control Terminal 6-8

6-3 Remove the Terminal Block 6-11

Chapter 7 Optional Accessories 7-1

7-1 Brake Resistors and Brake Units Used in AC Motor Drives 7-2

7-2 Magnetic Contactor / Air Circuit Breaker and Non-fuse Circuit Breaker 7-7

7-3 Fuse Specification Chart 7-10

7-4 AC / DC Reactor 7-12

7-5 Zero Phase Reactors 7-53

7-6 EMC Filter 7-59

7-7 Panel Mounting (MKC-KPPK) 7-78

7-8 Conduit Box Kit 7-80

7-9 Fan Kit 7-94

7-10 Flange Mounting Kit 7-112

7-11 Power Terminal Kit 7-128

7-12 USB / RS-485 Communication Interface IFD6530 7-131

Chapter 8 Option Cards 8-1

8-1 Option Card Installation 8-2

8-2 EMC-D42A -- Extension card for 4-point digital input / 2-point digital input 8-15

8-3 EMC-D611A -- Extension card for 6-point digital input (110 V_{AC} input voltage) 8-15

8-4 EMC-R6AA -- Relay output extension card (6-point N.O. output contact) 8-15
8-5 EMC-BPS01 -- +24V power card 8-16
8-6 EMC-A22A -- Extension card for 2-point analog input / 2-point analog output 8-17
8-7 EMC-PG01L / EMC-PG02L -- PG card (Line Driver) 8-19
8-8 EMC-PG01O / EMC-PG02O -- PG card (Open collector) 8-22
8-9 EMC-PG01U / EMC-PG02U -- PG card (ABZ Incremental encoder signal/ UVW Hall position signal input) 8-25
8-10 EMC-PG01R -- PG card (Resolver) 8-27
8-11 EMC-PG01H – PG card (Resolver) 8-30
8-12 EMC-MC01 -- Motion control card 8-33
8-13 CMC-PD01 -- Communication card, PROFIBUS DP 8-38
8-14 CMC-DN01 -- Communication card, DeviceNet 8-40
8-15 CMC-EIP01 / CMC-EIP01 -- Communication card, EtherNet/IP 8-43
8-16 CMC-EC01 -- Communication card, EtherCAT 8-47
8-17 CMC-PN01 -- Communication card, PROFINET 8-50
8-18 EMC-COP01 -- Communication card, CANopen 8-54
8-19 Delta Standard Fieldbus Cables 8-56
Chapter 9 Specification 9-1
9-1 230V Models 9-2
9-2 460V Models 9-3
9-3 Environment for Operation, Storage and Transportation 9-7
9-4 Specification for Operation Temperature and Protection Level 9-8
9-5 Derating Curve 9-9
9-6 Efficiency Curve 9-13
Chapter 10 Digital Keypad 10-1
10-1 Descriptions of Digital Keypad 10-2
10-2 Function of Digital Keypad KPC-CC01 10-5
10-3 TPEditor Installation Instruction 10-26
10-4 Digital Keypad KPC-CC01 Fault Codes and Descriptions 10-35
10-5 Unsupported Functions when Using TPEditor with the KPC-CC01 10-40
Chapter 11 Summary of Parameter Settings 11-1
00 Drive Parameters 11-2
01 Basic Parameters 11-11
02 Digital Input / Output Parameters 11-15
03 Analog Input / Output Parameters 11-22
04 Multi-step Speed Parameters 11-26
05 Motor Parameters 11-29
06 Protection Parameters 11-32
07 Special Parameters 11-39
08 High-function PID Parameters 11-42
09 Communication Parameters 11-44
10 Speed Feedback Control Parameters 11-50
11 Advanced Parameters 11-55

13 Application Parameters by Industry 11-59
14 Extension Card Parameter 11-60
Chapter 12 Descriptions of Parameter Settings 12-1
12-1 Descriptions of Parameter Settings 12-2
00 Drive Parameters 12-2
01 Basic Parameters 12-43
02 Digital Input / Output Parameter 12-61
03 Analog Input / Output Parameter 12-97
04 Multi-step Speed Parameters 12-123
05 Motor Parameters 12-129
06 Protection Parameters 12-139
07 Special Parameters 12-167
08 High-function PID Parameters 12-187
09 Communication Parameters 12-201
10 Speed Feedback Control Parameters 12-211
11 Advanced Parameters 12-233
13 Application Parameters by Industry 12-297
14 Extension Card Parameter 12-301
12-2 Adjustment & Application 12-305
Chapter 13 Warning Codes 13-1
Chapter 14 Fault Codes and Descriptions 14-1
Chapter 15 CANopen Overview 15-1
15-1 CANopen Overview 15-3
15-2 Wiring for CANopen 15-6
15-3 CANopen Communication Interface Descriptions 15-7
15-4 CANopen Supported Index 15-20
15-5 CANopen Fault Code 15-27
15-6 CANopen LED Function 15-38
Chapter 16 PLC Function Applications 16-1
16-1 PLC Summary 16-2
16-2 Notes before PLC Use 16-3
16-3 Turn On 16-5
16-4 Basic Principles of PLC Ladder Diagrams 16-14
16-5 Various PLC Device Functions 16-25
16-6 Introduction to the Command Window 16-39
16-7 Error Display and Handling 16-132
16-8 CANopen Master Control Applications 16-133
16-9 Explanation of Various PLC Mode Controls (Speed, Torque, Homing, and Position) 16-146
16-10 Internal Communications Main Node Control 16-152
16-11 Count Function Using MI8 16-156
16-12 Modbus Remote IO Control Applications (use MODRW) 16-157
16-13 Calendar Functions 16-164

Chapter 17 Safe Torque Off Function **17-1**
17-1 The Drive Safety Function Failure Rate 17-2
17-2 Safety Torque Off Terminal Function Description 17-3
17-3 Wiring Diagram 17-4
17-4 Parameters 17-6
17-5 Operating Sequence Description 17-7
17-6 New Error Code for STO Function 17-9
Appendix A.Modbus Protocol **A-1**
A-1 Code description A-2
A-2 Data format A-2
A-3 Communication Protocol A-3
A-4 Address list A-8
A-5 Exception response A-17
Appendix B. Revision History **B-1**

Issued Edition: 00
Firmware Version: V2.09 (Refer to Parameter 00-06 on the product to get the firmware version.)
Issued Date: 2024 / 04

[This page intentionally left blank]

Chapter 1 Introduction

1-1 Nameplate Information

1-2 Model Name

1-3 Serial Number

1-4 Apply After Service by Mobile Device

1-5 RFI Jumper

1-6 Dimensions

After receiving the AC motor drive, check for the following:

1. Inspect the unit after unpacking to ensure that it was not damaged during shipment. Make sure that the part number printed on the package matches the part number indicated on the nameplate.
2. Make sure that the mains voltage is within the range indicated on the nameplate. Install the AC motor drive according to the instructions in this manual.
3. Before applying power, make sure that all devices, including mains power, motor, control board and digital keypad, are connected correctly.
4. When wiring the AC motor drive, make sure that the wiring of input terminals “R/L1, S/L2, T/L3” and output terminals ”U/T1, V/T2, W/T3” are correct to prevent damage to the drive.
5. When power is applied, use the digital keypad (KPC-CC01) to select the language and set parameters. When executing a trial run, begin with a low speed and then gradually increase the speed to the desired speed.

1-1 Nameplate Information

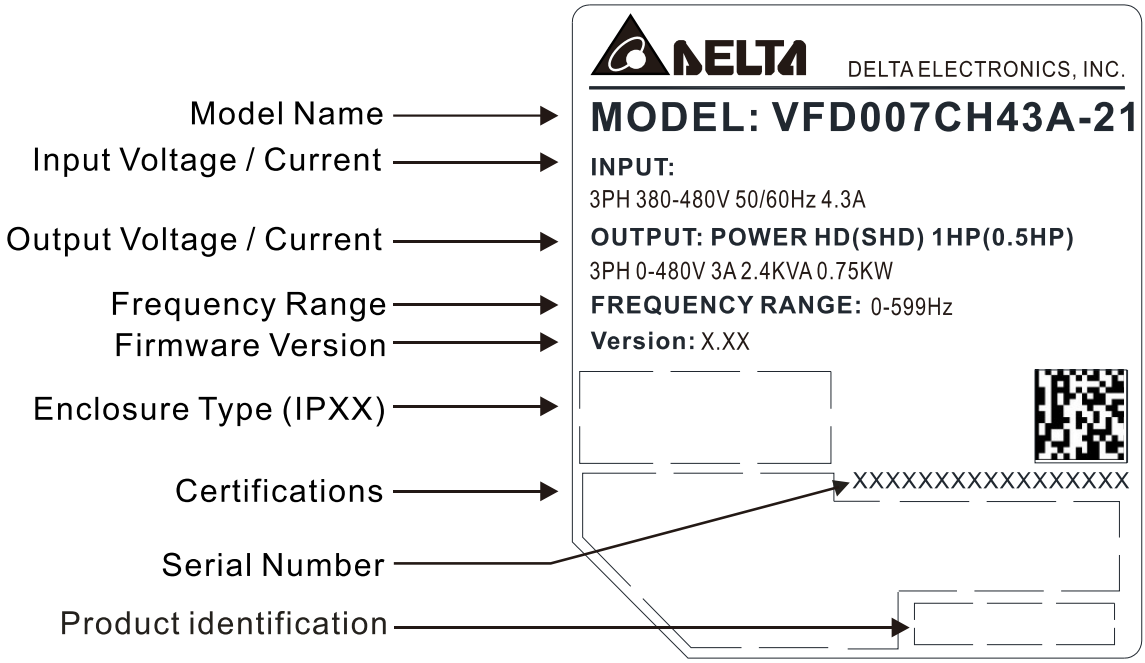

Figure 1-1

1-2 Model Name

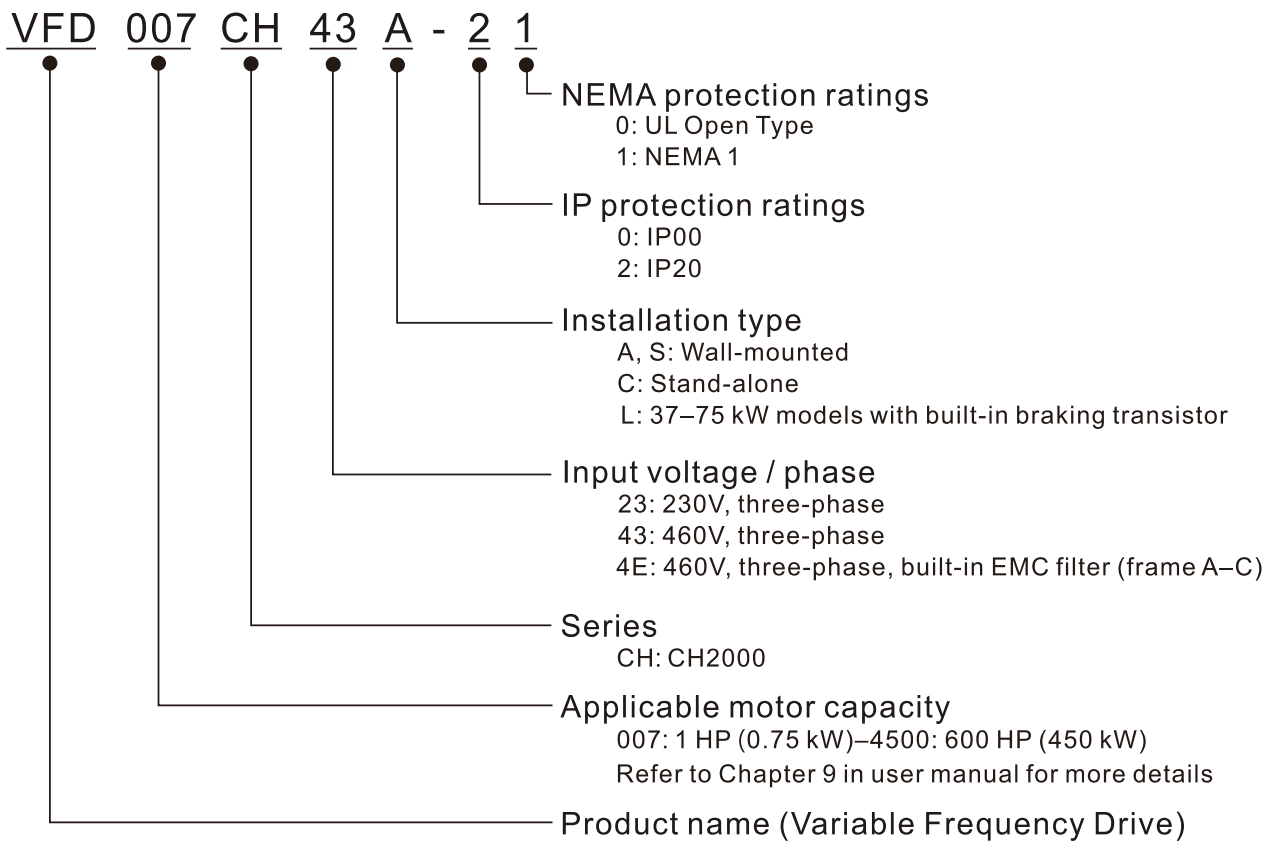

1-3 Serial Number

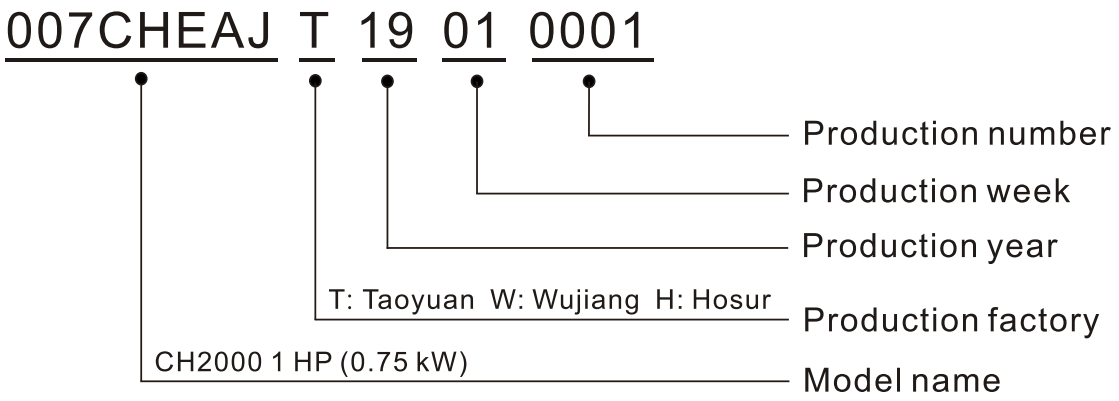

1-4 Apply After Service by Mobile Device

1-4-1 Location of Service Link Label

Frame A–H

Service link label (Service Label) is pasted on the upper-right corner of the side where keypad is installed on the case body, as the drawing below shown:

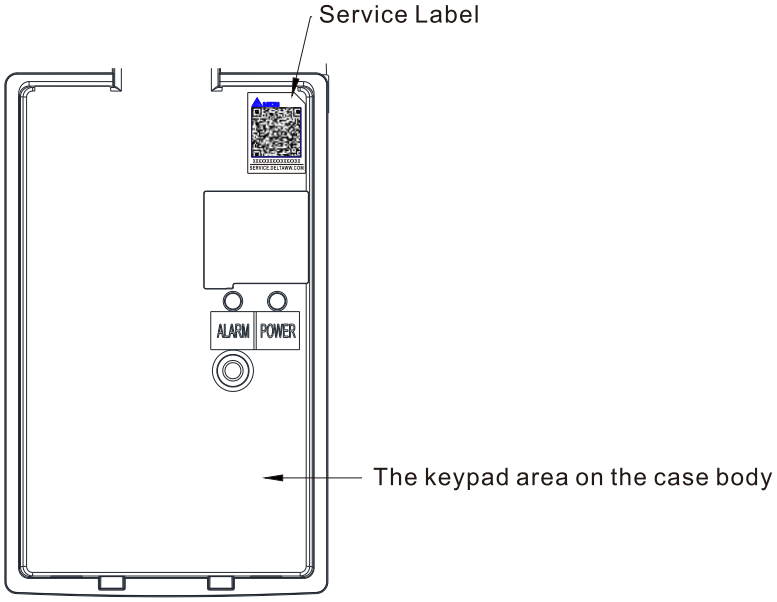

Figure 1-2

1-4-2 Service Link Label

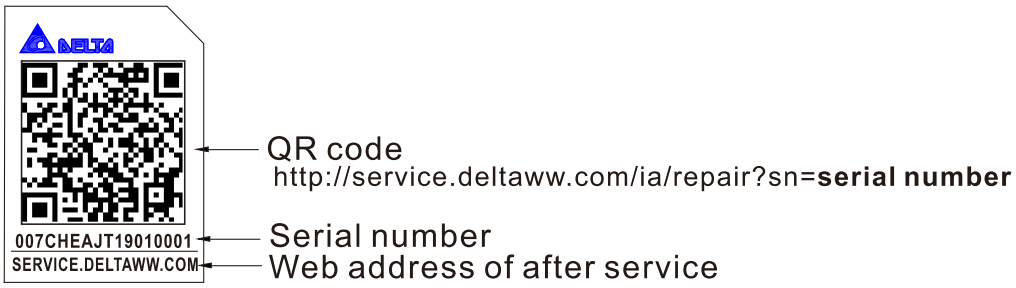

Figure 1-3

Scan QR Code to request service

1. Find the QR code sticker (as shown above).
2. Use a smartphone to run a QR Code reader APP.
3. Point your camera at the QR Code. Hold your camera steady until the QR code comes into focus.
4. Access the Delta After Service website.
5. Fill your information into the column marked with an orange star.
6. Enter the CAPTCHA and click “Submit” to complete the application.

Cannot find the QR Code?

1. Open a web browser on your computer or smart phone.
2. Enter https://service.deltaww.com/ia/repair in browser bar and press the Enter key.
3. Fill your information into the columns marked with an orange star.
4. Enter the CAPTCHA and click “Submit” to complete the application.

1-5 RFI Jumper

RFI Jumper

1. The drive contains Varistors / MOVs that are connected from phase to phase and from phase to ground to prevent the drive from unexpected stop or damage caused by mains surges or voltage spikes. Because the Varistors / MOVs from phase to ground are connected to ground with the RFI jumper, removing the RFI jumper disables the protection.
2. In models with a built-in EMC filter, the RFI jumper connects the filer capacitors to ground to form a return path for high frequency noise in order to isolate the noise from contaminating the mains power. Removing the RFI jumper strongly reduces the effect of the built-in EMC filter. Although a single drive complies with the international standards for leakage current, an installation with several drives with built-in EMC filters can trigger the RCD. Removing the RFI jumper helps, but the EMC performance of each drive is no longer guaranteed.

Frame A–C Screw Torque: 8–10 kg-cm / (6.9–8.7 lb-in.) / (0.8–1.0 Nm)

Loosen the screw and remove the RFI jumper (as shown below).

Fasten the screw again after you remove the RFI jumper.

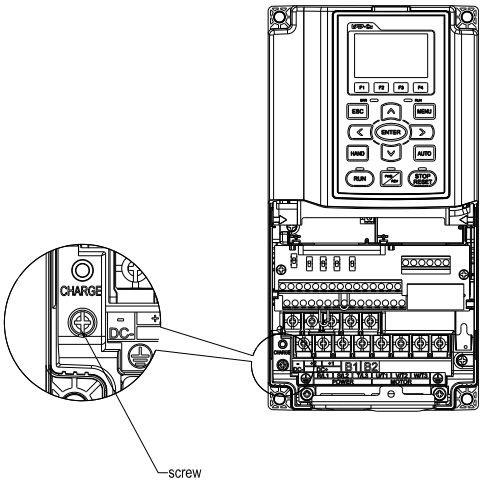

Figure 1-4

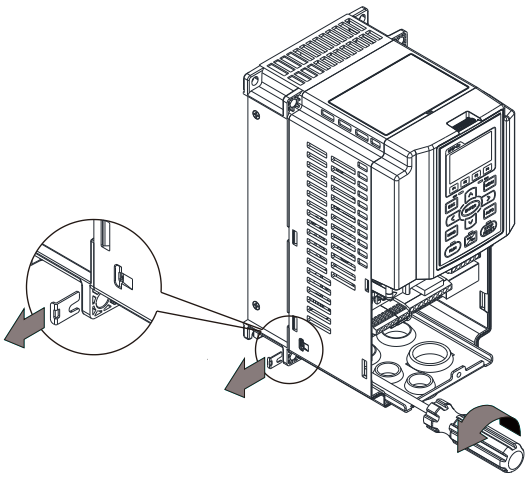

Figure 1-5

Frame D0–H

Remove the RFI jumper by hands (as shown below).

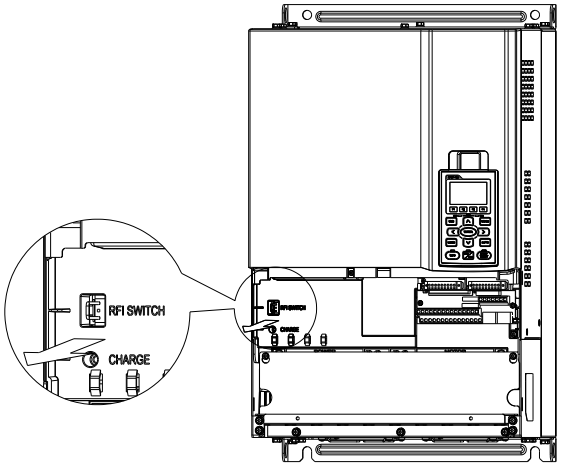

Figure 1-6

Isolating main power from ground:

When the power distribution system for the drive is a floating ground system (IT) or an asymmetric ground system (Corner Grounded TN Systems), you must remove the RFI jumper. Removing the RFI jumper disconnects the internal capacitors from ground to avoid damaging the internal circuits and to reduce the ground leakage current.

Important points regarding ground connection

- ☑ To ensure the safety of personnel, proper operation, and to reduce electromagnetic radiation, you must properly ground the motor and drive during installation.
- ☑ The diameter of the grounding cables must with the local safety regulations.
- ☑ You must connect the shielded cable to the motor drive's ground to meet safety regulations.
- ☑ Only use the shielded cable as the ground for equipment when the aforementioned points are met.
- ☑ When installing multiple drives, do not connect the grounds of the drives in series but connect each drive to ground. The following pictures show the correct and wrong ways to connect the grounds.

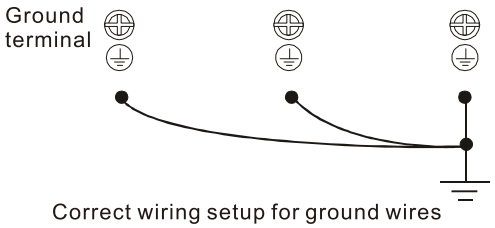

Figure 1-7

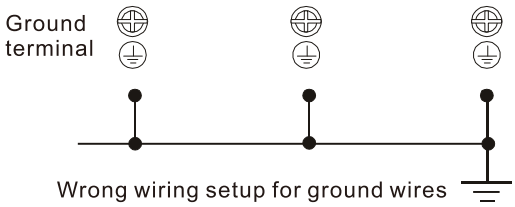

Figure 1-8

Pay particular attention to the following points:

- ☑ Do not remove the RFI jumper while the power is on.
- ☑ Removing the RFI jumper also cuts the capacitor conductivity of the surge absorber to ground and the built-in EMC filter capacitors. Compliance with the EMC specifications is no longer guaranteed.
- ☑ Do not remove the RFI jumper if the mains power is a symmetrical grounded power system in order to maintain the efficiency for EMC circuit.
- ☑ Remove the RFI jumper when conducting high voltage tests. When conducting a high voltage test to the entire facility, disconnect the mains power and the motor if the leakage current is too high.

Floating Ground System (IT Systems)

A floating ground system is also called an IT system, an ungrounded system, or a high impedance / resistance (greater than 30 Ω) grounded system.

- ☑ Remove the RFI jumper to disconnect the ground cable from the internal filter capacitor and surge absorber.
- ☑ Do not install an external RFI / EMC filter. The external EMC filter passes through a filter capacitor and connects power input to the ground. This is very dangerous and damages the motor drive.
- ☑ In situations where EMC is required, use an EMC filter specifically for IT system if necessary. Disconnecting the ground cable from the filter prevents damage to the motor drive but compliance with EMC is no longer guaranteed.
- ☑ In situations where EMC is required, check for excess electromagnetic radiation affecting nearby low-voltage circuits. In some situations, the adapter and cable naturally provide enough suppression. If in doubt, install an extra electrostatic shielded cable on the power supply side between the main circuit and the control terminals to increase shielding.

Asymmetric Ground System(Corner Grounded TN Systems)

Caution: Do not remove the RFI jumper while power to the input terminal of the drive is ON.

In the following four situations, you must remove the RFI jumper. This is to prevent the system from grounding through the RFI and filter capacitors and damaging the drive.

You must remove the RFI jumper for an asymmetric ground system	
1. Grounding at a corner in a triangle configuration 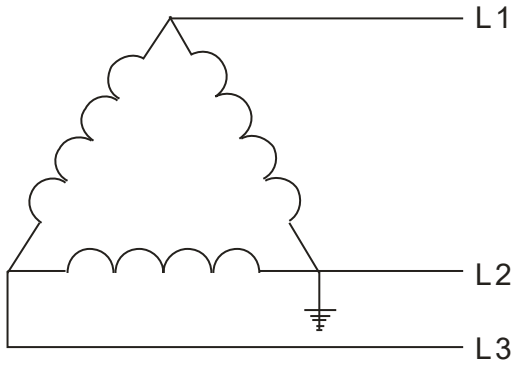 Figure 1-9	2. Grounding at a midpoint in a polygonal configuration 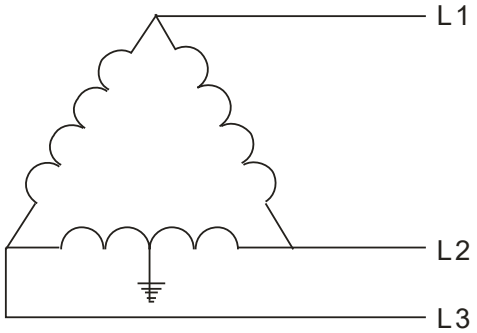 Figure 1-10
3. Grounding at one end in a single-phase configuration 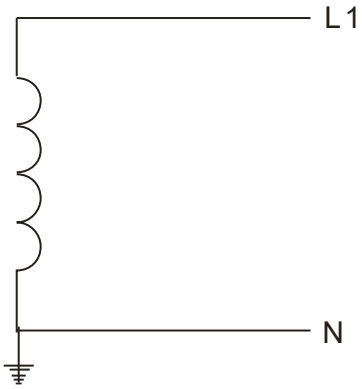 Figure 1-11	4. No stable neutral grounding in a three-phase autotransformer configuration 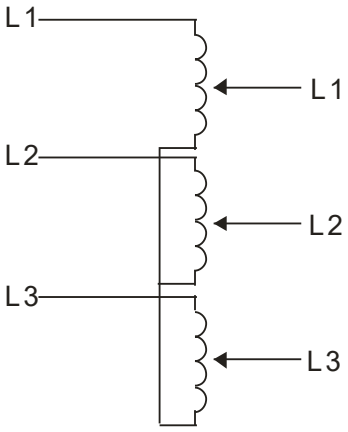 Figure 1-12
You can use the RFI jumper for a symmetrical grounding power system	
In a situation with a symmetrical grounding power system, you can use the RFI jumper to maintain the effect of the built-in EMC filter and surge absorber. For example, the diagram on the right is a symmetrical grounding power system.	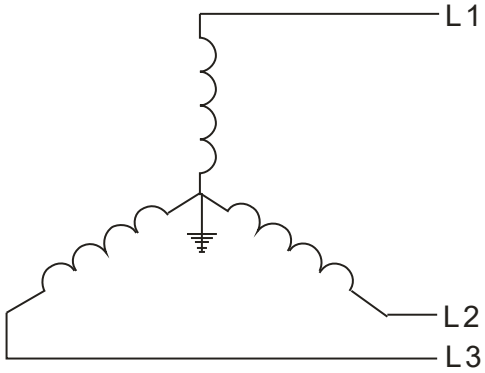 Figure 1-13

1-6 Dimensions

Frame A

VFD007CH23A-21, VFD015CH23A-21, VFD022CH23A-21, VFD037CH23A-21, VFD007CH43A-21, VFD015CH43A-21, VFD022CH43A-21, VFD037CH43A-21, VFD055CH43A-21, VFD007CH4EA-21, VFD015CH4EA-21, VFD022CH4EA-21, VFD037CH4EA-21, VFD055CH4EA-21

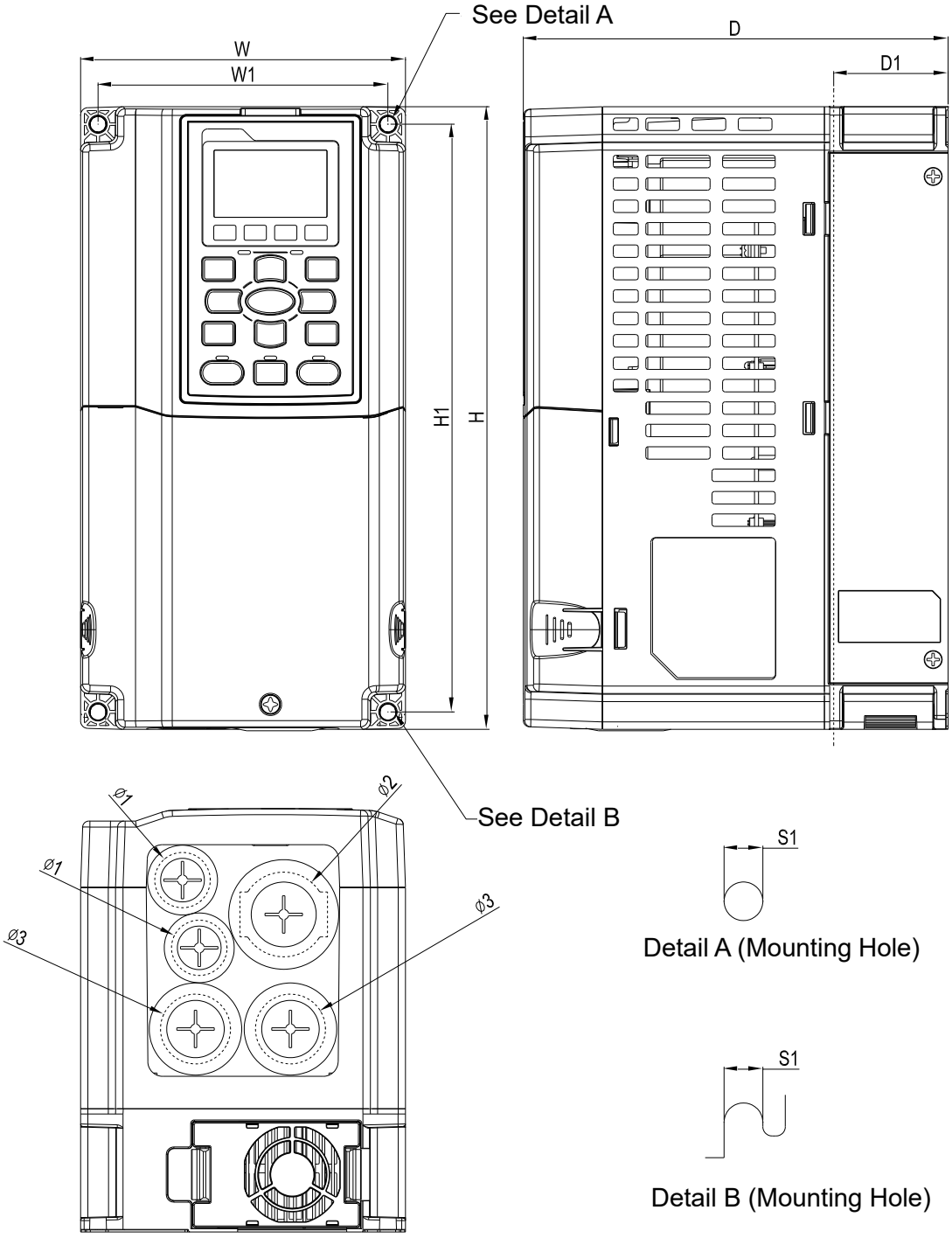

Figure 1-14

Unit: mm (inch)

Frame	W	H	D	W1	H1	D1*	S1	Ø1	Ø2	Ø3
A1	130.0 (5.12)	250.0 (9.84)	170.0 (6.69)	116.0 (4.57)	236.0 (9.29)	45.8 (1.80)	6.2 (0.24)	22.2 (0.87)	34.0 (1.34)	28.0 (1.10)

D1*: Flange mounting

Table 1-1

Frame B

VFD055CH23A-21, VFD075CH23A-21, VFD110CH23A-21, VFD075CH43A-21, VFD110CH43A-21, VFD150CH43A-21, VFD075CH4EA-21, VFD110CH4EA-21, VFD150CH4EA-21

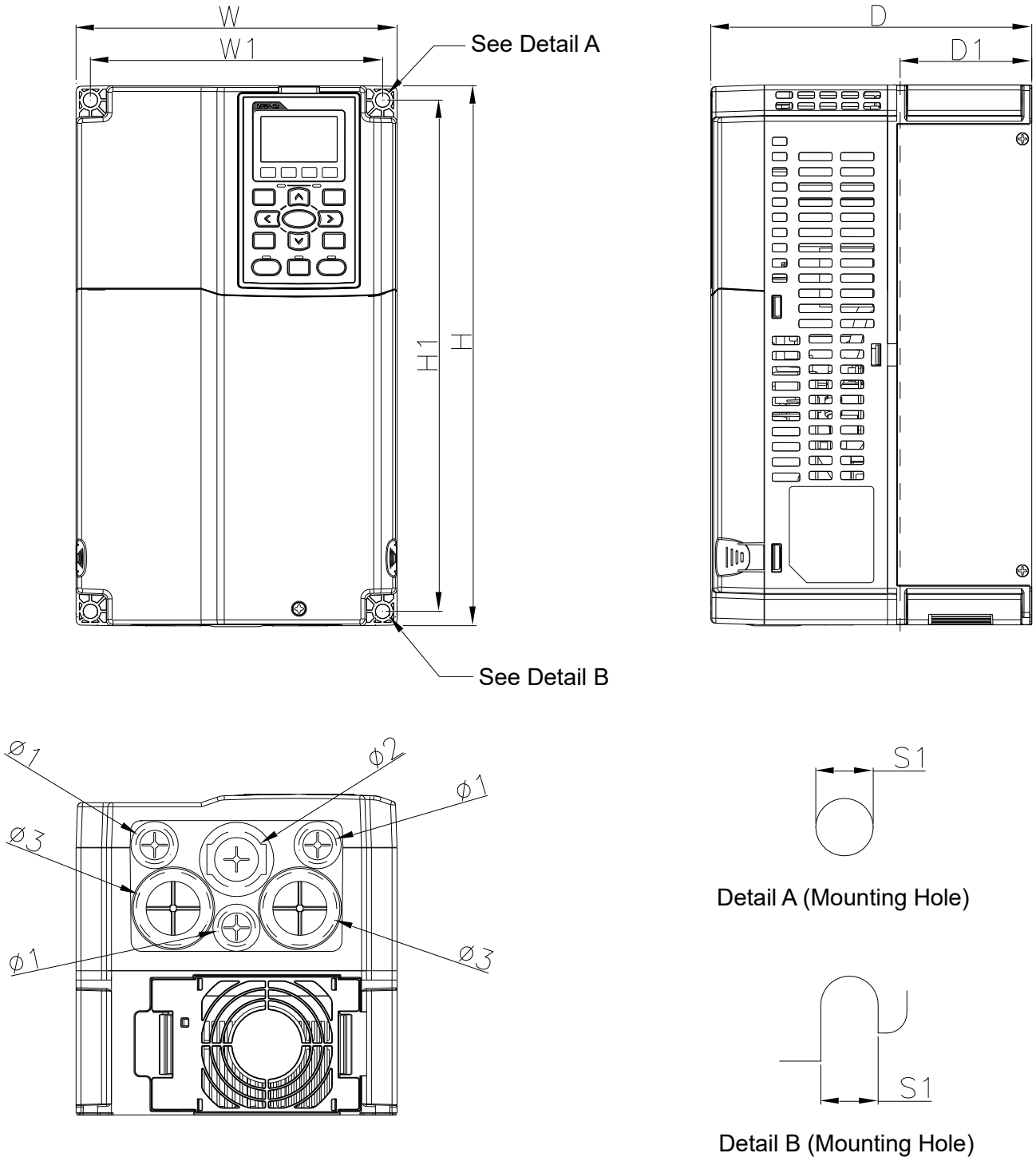

Figure 1-15

Unit: mm (inch)

Frame	W	H	D	W1	H1	D1*	S1	Ø1	Ø2	Ø3
B1	190.0 (7.48)	320.0 (12.60)	190.0 (7.48)	173.0 (6.81)	303.0 (11.93)	77.9 (3.07)	8.5 (0.33)	22.2 (0.87)	34.0 (1.34)	43.8 (1.72)

D1*: Flange mounting

Table 1-2

Frame C

VFD150CH23A-21, VFD185CH23A-21, VFD185CH43A-21, VFD220CH43A-21, VFD300CH43A-21, VFD185CH4EA-21, VFD220CH4EA-21, VFD300CH4EA-21

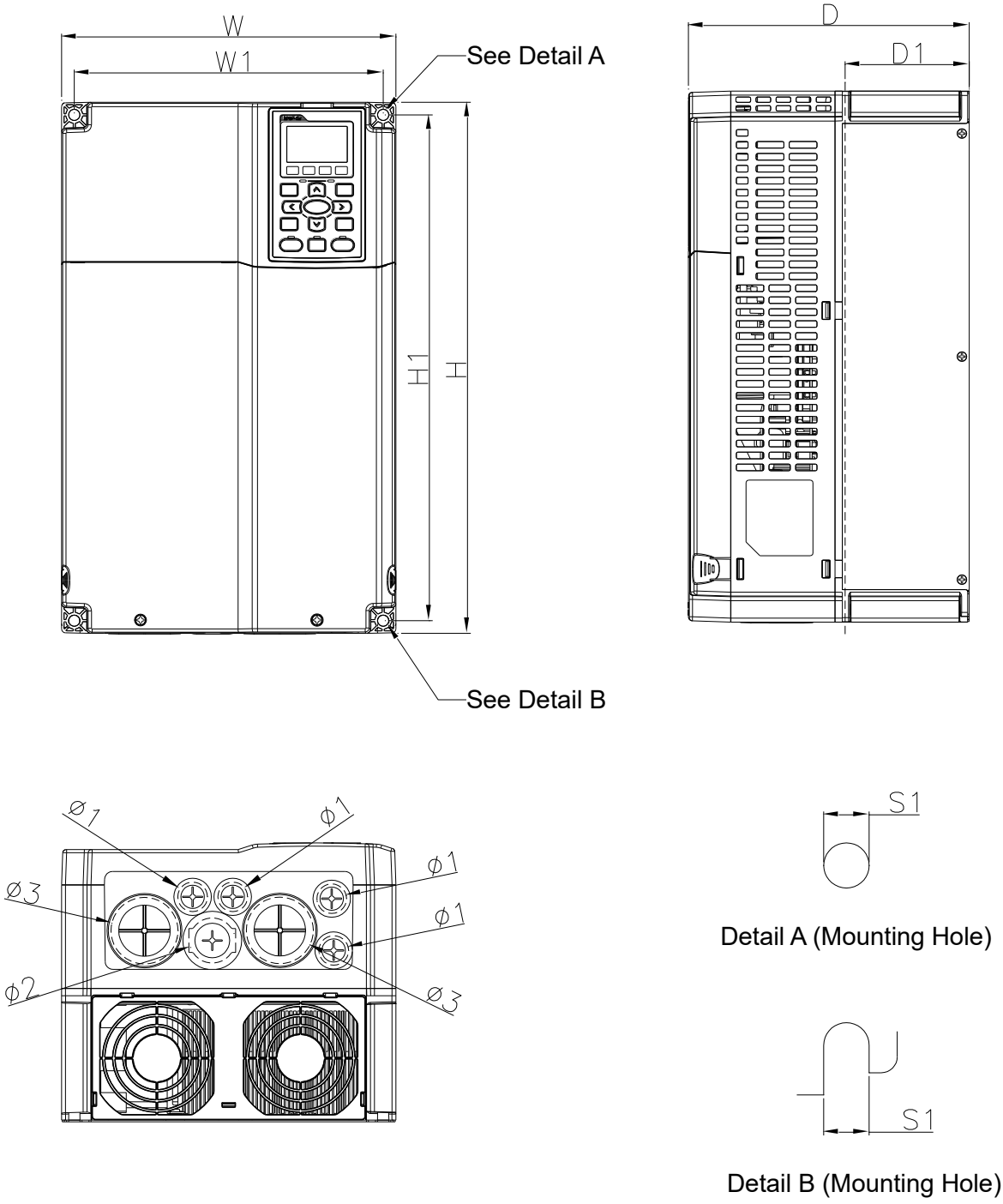

Figure 1-16

Unit: mm (inch)

Frame	W	H	D	W1	H1	D1*	S1	Ø1	Ø2	Ø3
C1	250.0 (9.84)	400.0 (15.75)	210.0 (8.27)	231.0 (9.09)	381.0 (15.00)	92.9 (3.66)	8.5 (0.33)	22.2 (0.87)	34.0 (1.34)	50.0 (1.97)

D1*: Flange mounting

Table 1-3

Frame D0

D0-1: VFD370CH43S-21

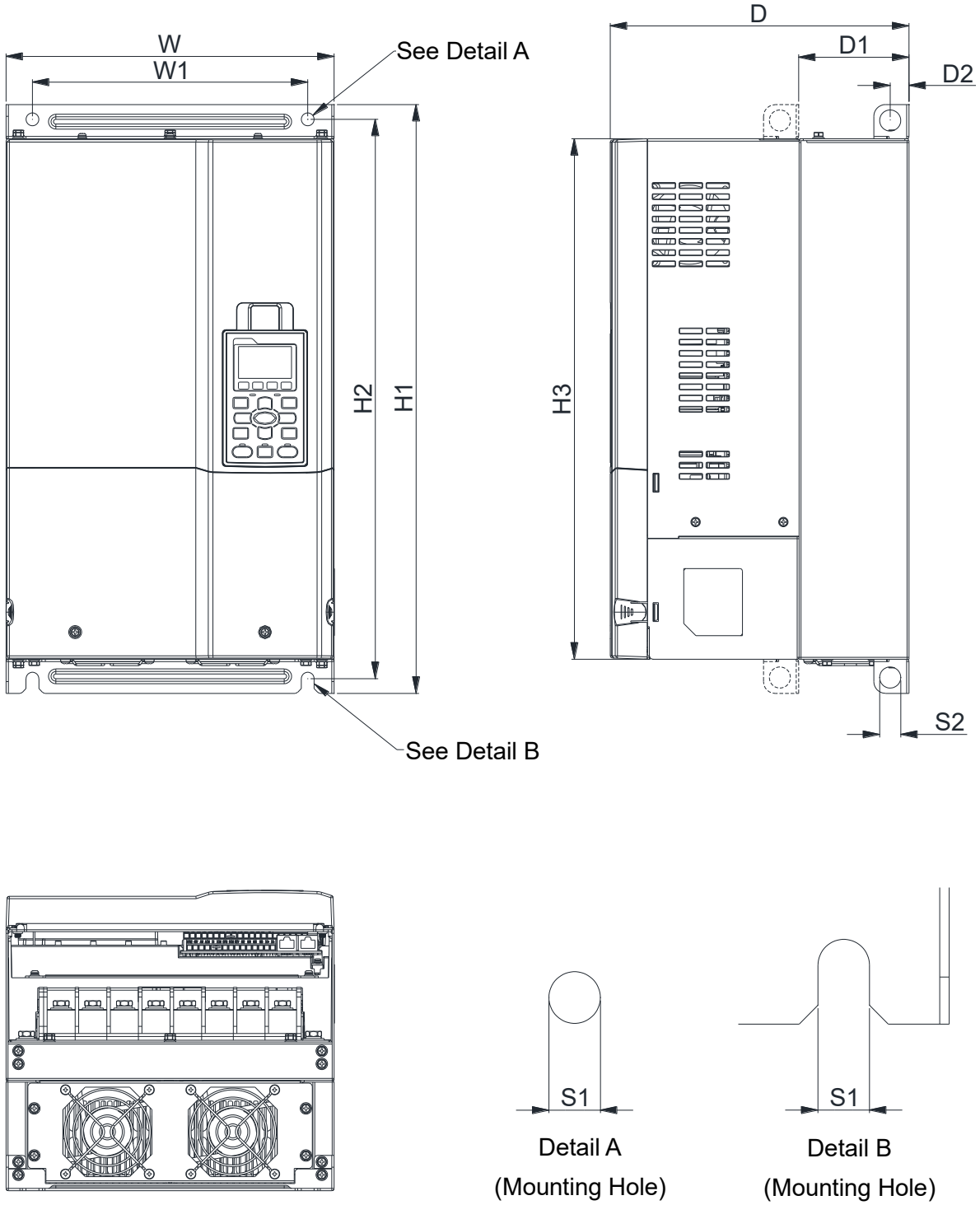

Figure 1-17

Unit: mm (inch)

Frame	W	H1	D	W1	H2	H3	D1*	D2	S1	S2
D0-1	280.0 (11.02)	500.0 (19.69)	255.0 (10.04)	235.0 (9.25)	475.0 (18.70)	442.0 (17.40)	94.2 (3.71)	16.0 (0.63)	11.0 (0.43)	18.0 (0.71)

D1*: Flange mounting

Table 1-4

Frame D0

D0-2: VFD370CH43S-21

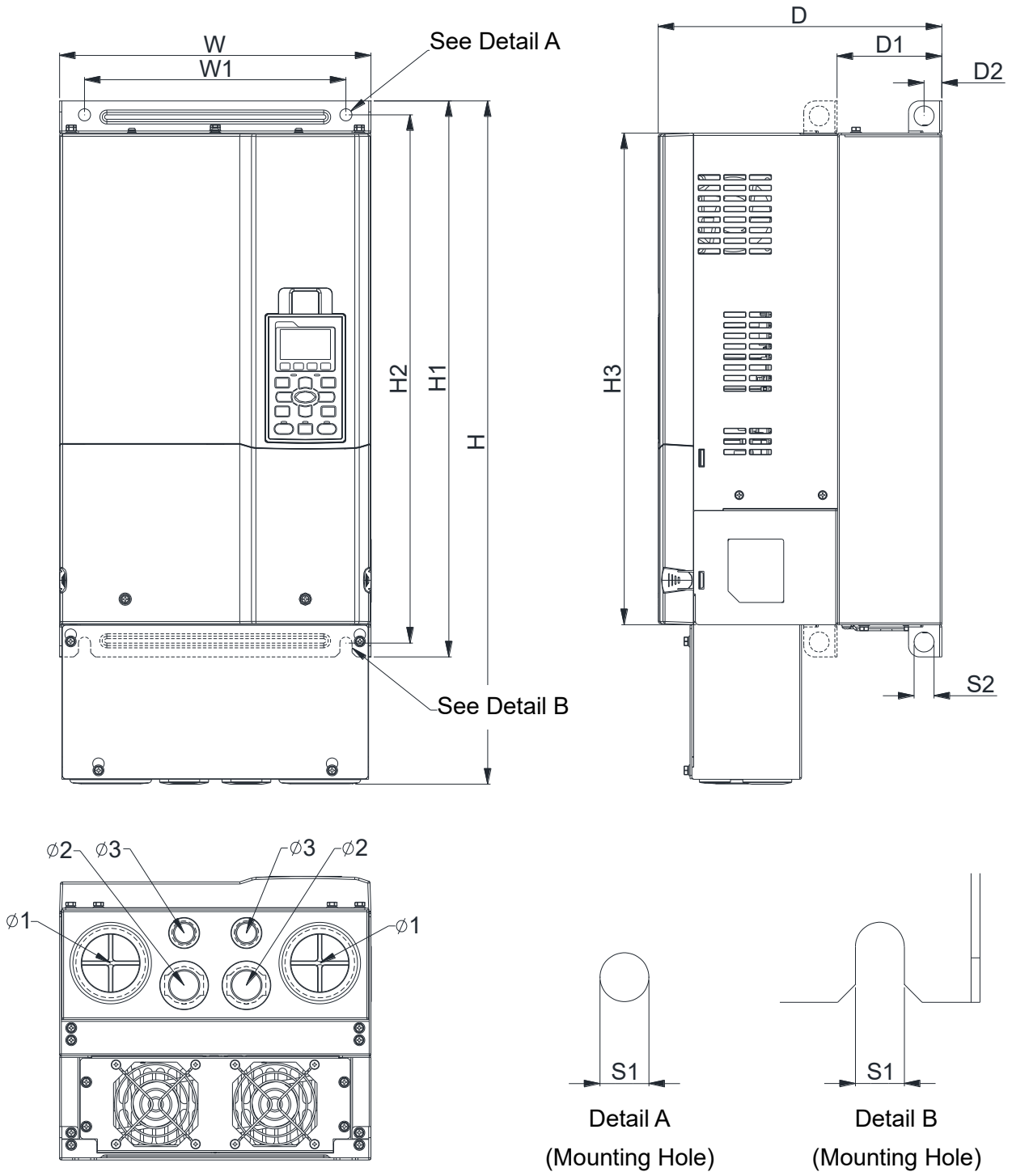

Figure 1-18

Unit: mm (inch)

Frame	W	H	D	W1	H1	H2	H3	D1*	D2	S1	S2	Ø1	Ø2	Ø3
D0-2	280.0 (11.02)	614.4 (24.19)	255.0 (10.04)	235.0 (9.25)	500.0 (19.69)	475.0 (18.70)	442.0 (17.40)	94.2 (3.71)	16.0 (0.63)	11.0 (0.43)	18.0 (0.71)	62.7 (2.47)	34.0 (1.34)	22.0 (0.87)

D1*: Flange mounting

Table 1-5

Frame D0

D0-3: VFD370CH43L-00

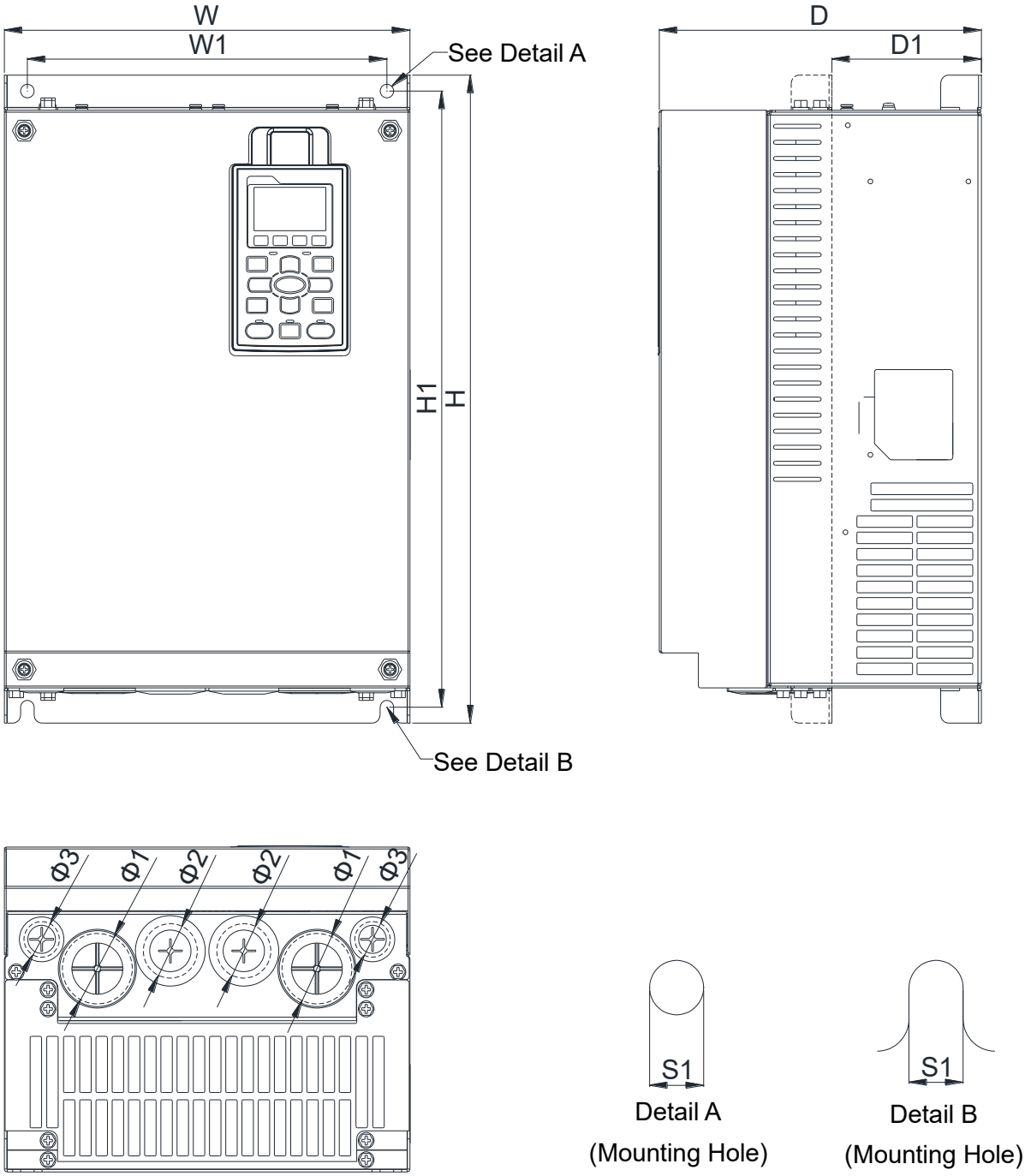

Figure 1-19

Unit: mm (inch)

Frame	W	H	D	W1	H1	D1*	S1	Ø1	Ø2	Ø3
D0-3	255.0 (10.04)	403.8 (15.90)	202.5 (7.97)	226.0 (8.90)	384.0 (15.12)	94.0 (3.70)	8.5 (0.33)	44.0 (1.73)	34.0 (1.34)	22.3 (0.88)

D1*: Flange mounting

Table 1-6

Frame D

D1: VFD220CH23A-00, VFD300CH23A-00, VFD370CH23A-00, VFD450CH43A-00, VFD550CH43A-00, VFD750CH43A-00

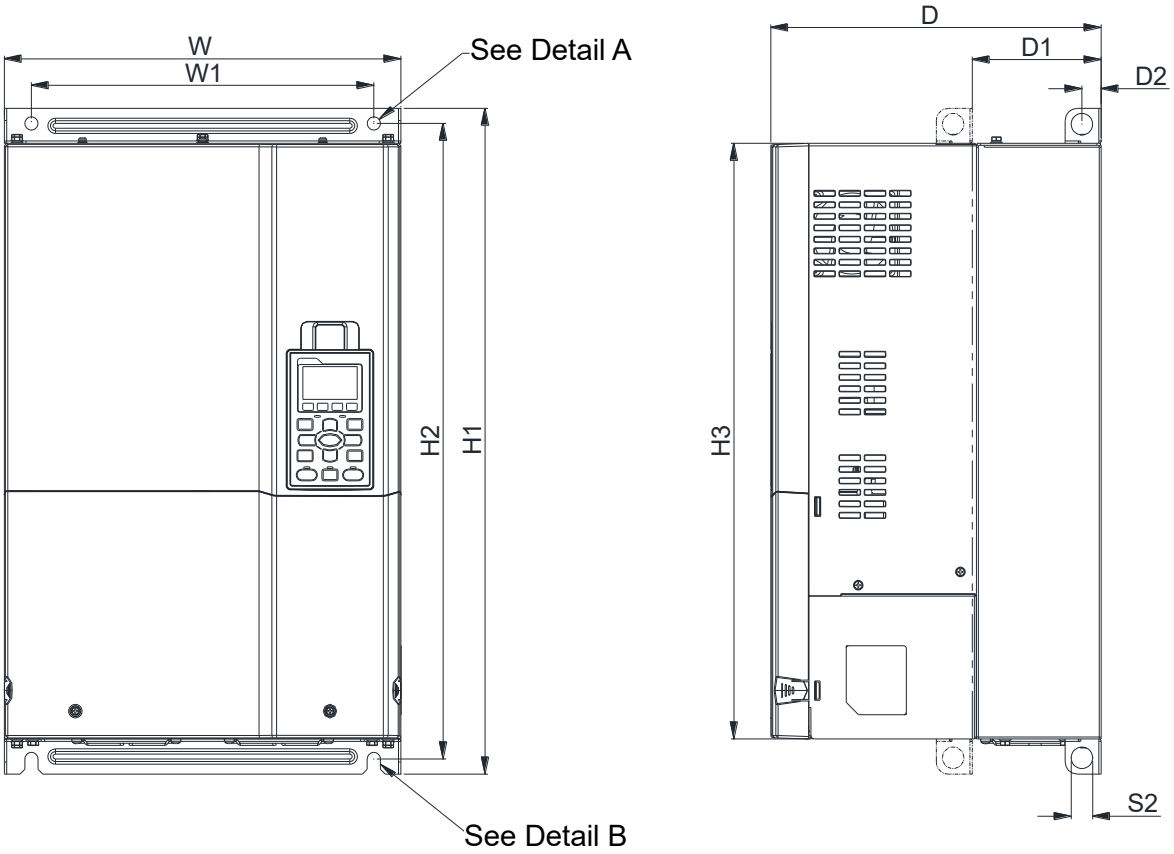

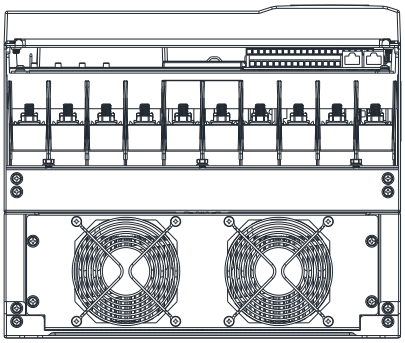

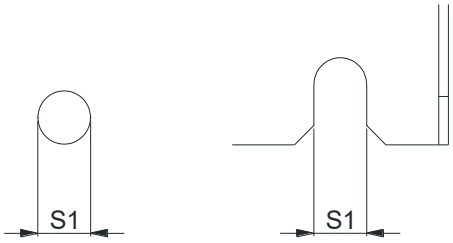

Detail A (Mounting Hole)

Detail B (Mounting Hole)

Figure 1-20

Unit: mm (inch)

Frame	W	H	D	W1	H1	H2	H3	D1*	D2	S1	S2	Ø1	Ø2	Ø3
D1	330.0 (12.99)	-	275.0 (10.83)	285.0 (11.22)	550.0 (21.65)	525.0 (20.67)	492.0 (19.37)	107.2 (4.22)	16.0 (0.63)	11.0 (0.43)	18.0 (0.71)	-	-	-

D1*: Flange mounting

Table 1-7

Frame D

D2: VFD220CH23A-21, VFD300CH23A-21,VFD370CH23A-21, VFD450CH43A-21, VFD550CH43A-21, VFD750CH43A-21

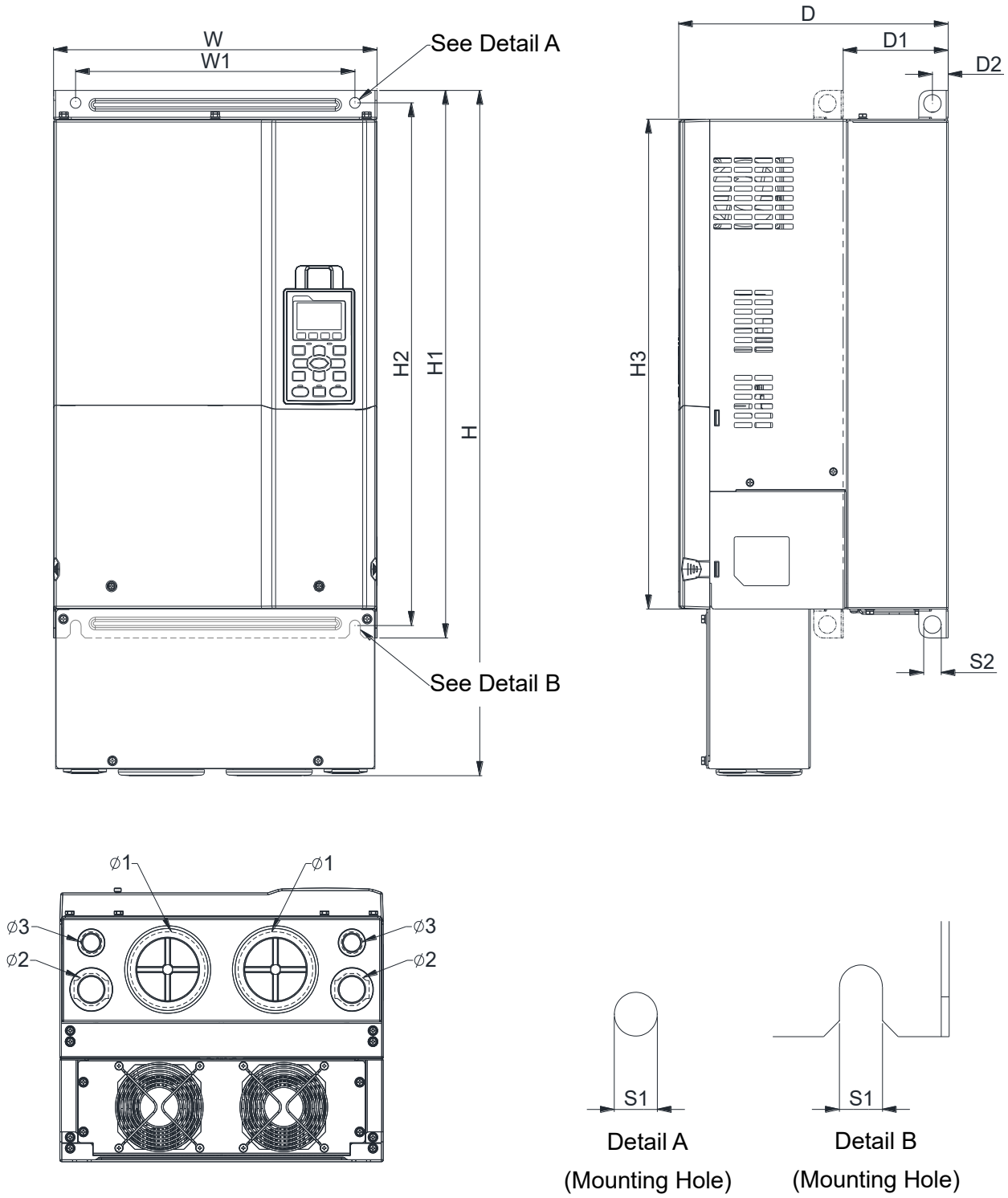

Figure 1-21

Unit: mm (inch)

Frame	W	H	D	W1	H1	H2	H3	D1*	D2	S1	S2	Ø1	Ø2	Ø3
D2	330.0 (12.99)	688.3 (27.10)	275.0 (10.83)	285.0 (11.22)	550.0 (21.65)	525.0 (20.67)	492.0 (19.37)	107.2 (4.22)	16.0 (0.63)	11.0 (0.43)	18.0 (0.71)	76.2 (3.00)	34.0 (1.34)	22.0 (0.87)

D1*: Flange mounting

Table 1-8

Frame D

D3: VFD450CH43L-00, VFD550CH43L-00, VFD750CH43L-00

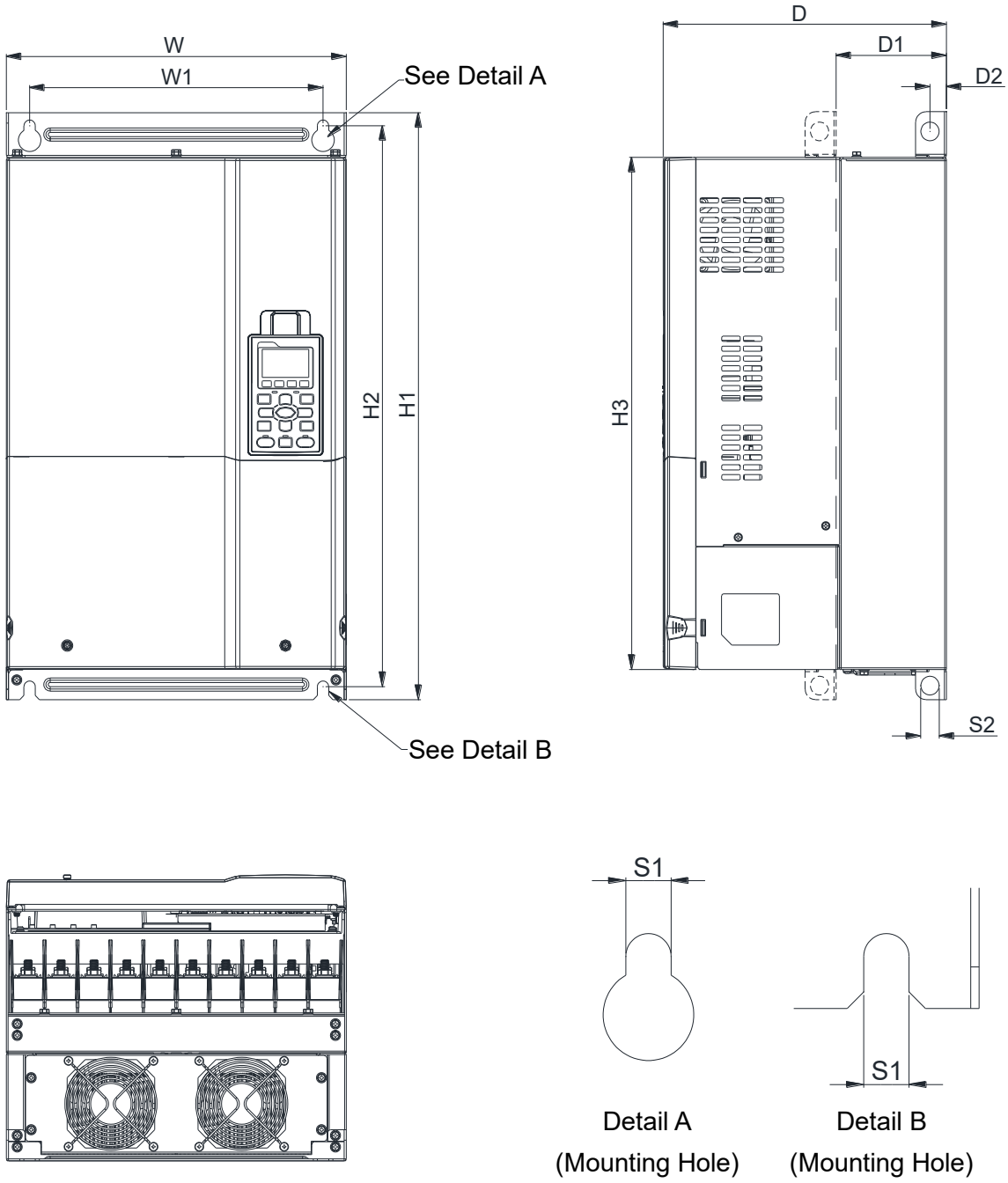

Figure 1-22

Unit: mm (inch)

Frame	W	D	W1	D1*	D2	H1	H2	H3	S1	S2
D3	330.0 (12.99)	275.0 (10.83)	285.0 (11.22)	107.2 (4.22)	16.0 (0.63)	565.0 (22.24)	540.0 (20.67)	492.0 (19.37)	11.0 (0.43)	18.0 (0.71)

D1*: Flange mounting

Table 1-9

Frame E

E1: VFD450CH23A-00, VFD550CH23A-00, VFD900CH43A-00, VFD1100CH43A-00

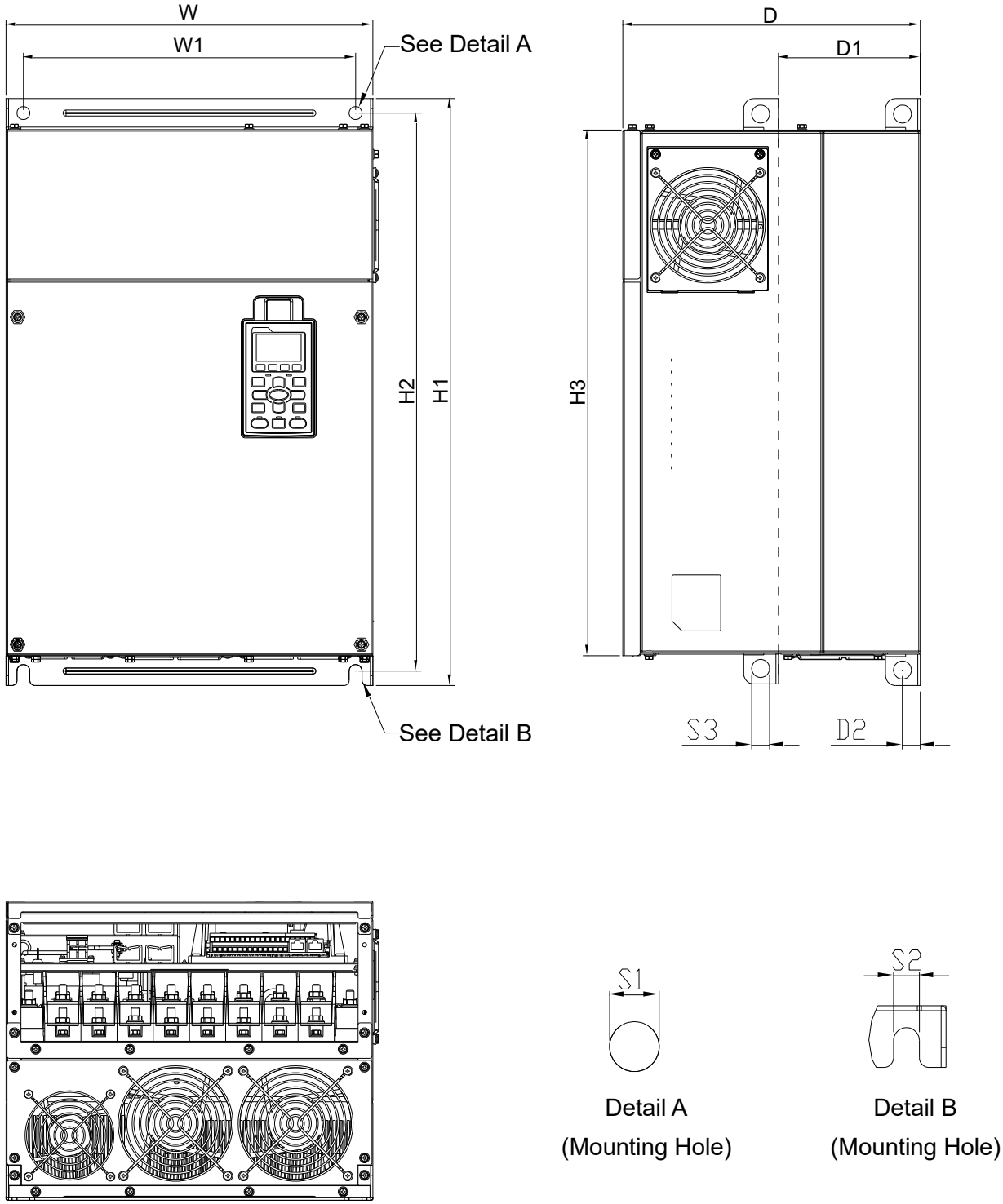

Figure 1-23

Unit: mm (inch)

Frame	W	H	D	W1	H1	H2	H3	D1*	D2	S1, S2	S3	Ø1	Ø2	Ø3
E1	370.0 (14.57)	-	300.0 (11.81)	335.0 (13.19	589 (23.19)	560.0 (22.05)	528.0 (20.80)	143.0 (5.63)	18.0 (0.71)	13.0 (0.51)	18.0 (0.71)	-	-	-

D1*: Flange mounting

Table 1-10

Frame E

E2: VFD450CH23A-21, VFD550CH23A-21, VFD900CH43A-21, VFD1100CH43A-21

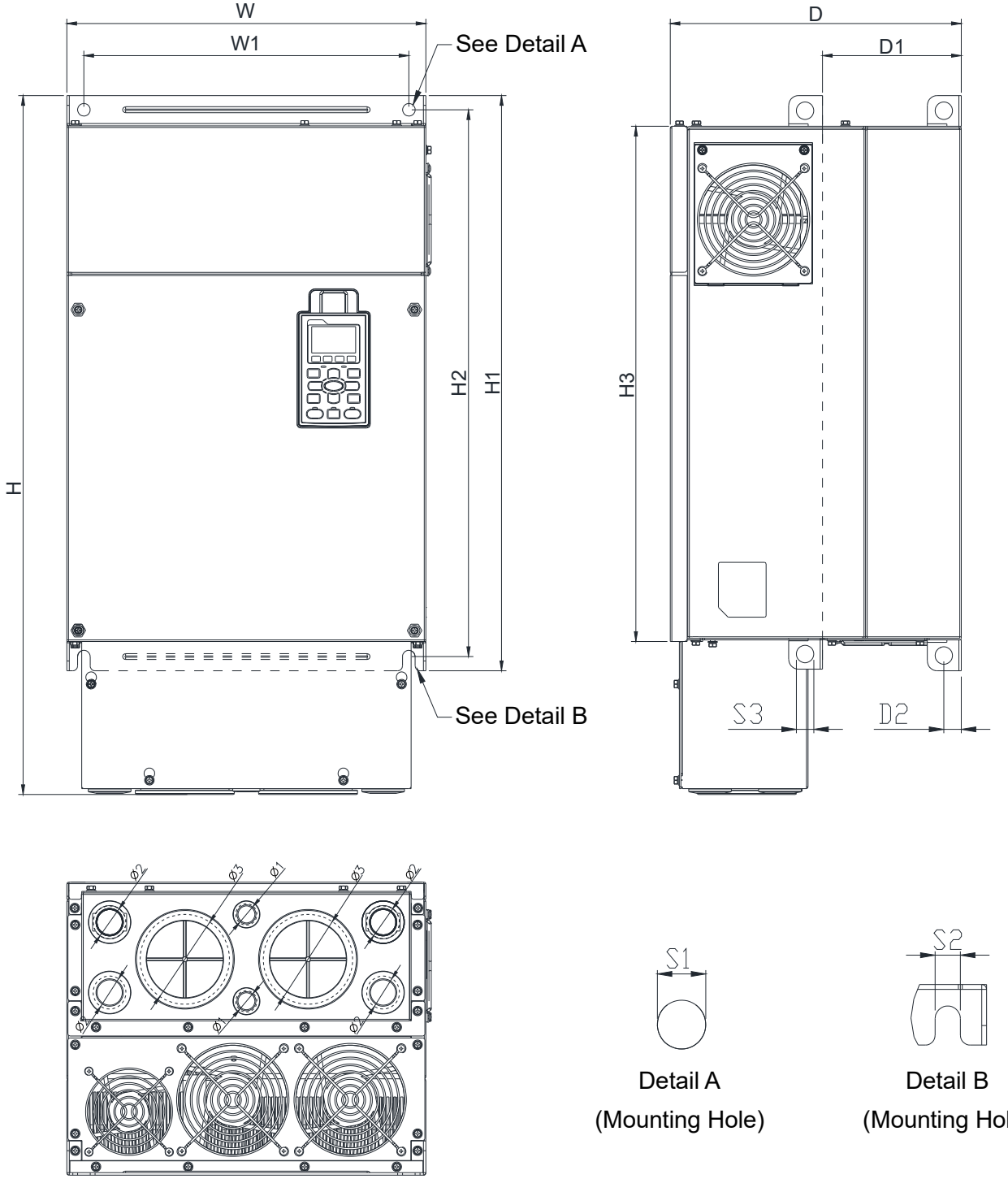

Figure 1-24

Unit: mm (inch)

Frame	W	H	D	W1	H1	H2	H3	D1*	D2	S1, S2	S3	Ø1	Ø2	Ø3
E2	370.0 (14.57)	715.8 (28.18)	300.0 (11.81)	335.0 (13.19	589 (23.19)	560.0 (22.05)	528.0 (20.80)	143.0 (5.63)	18.0 (0.71)	13.0 (0.51)	18.0 (0.71)	22.0 (0.87)	34.0 (1.34)	92.0 (3.62)

D1*: Flange mounting

Table 1-11

Frame F

F1: VFD750CH23A-00, VFD1320CH43A-00

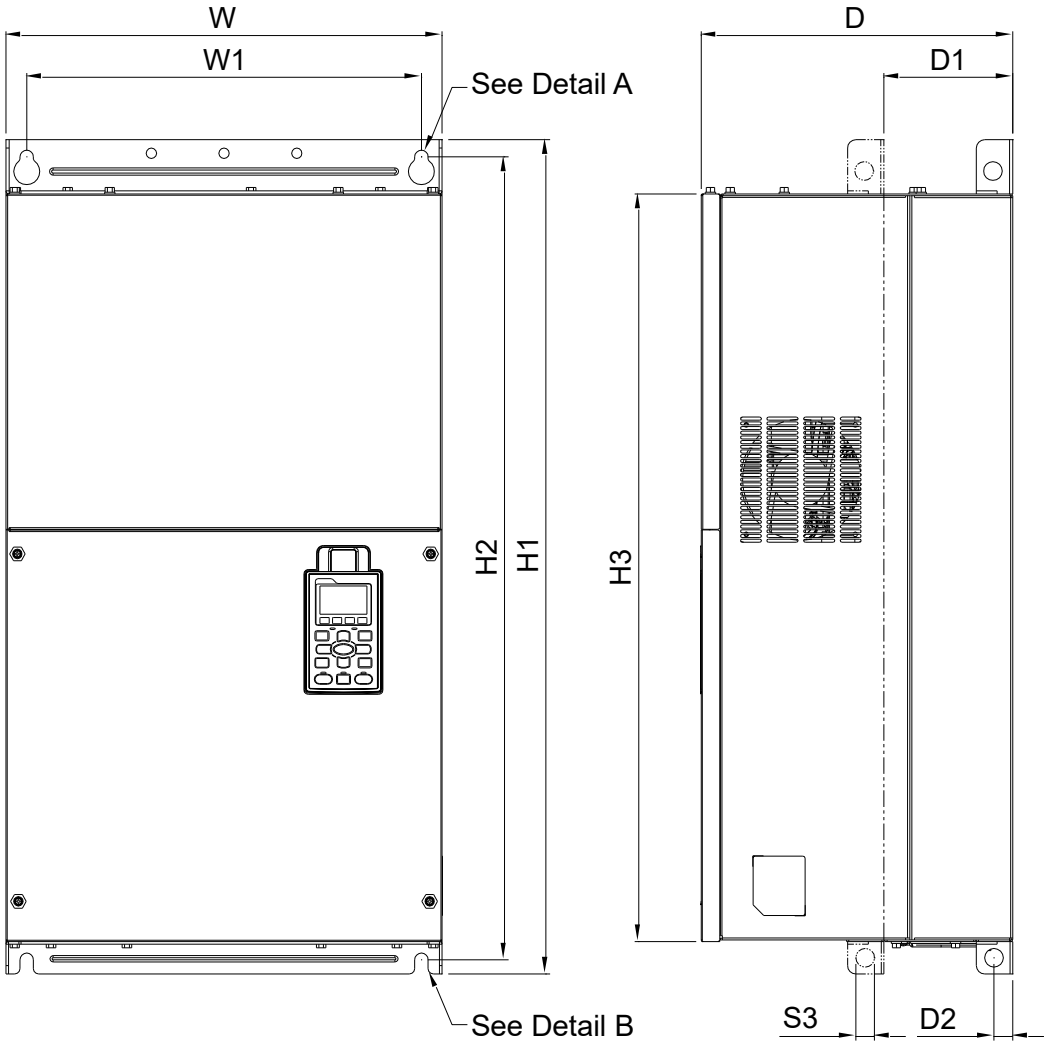

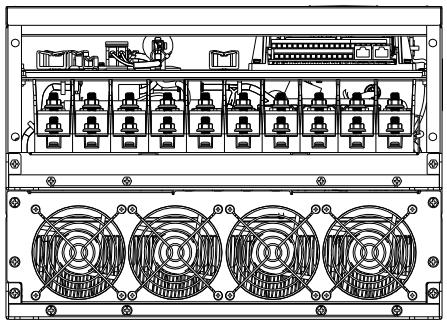

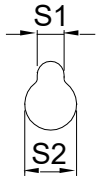

Detail A (Mounting Hole)

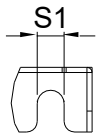

Detail B (Mounting Hole)

Figure 1-25

Unit: mm (inch)

Frame	W	H	D	W1	H1	H2	H3	D1*	D2	S1	S2	S3
F1	420.0 (16.54)	-	300.0 (11.81)	380.0 (14.96)	800.0 (31.50)	770.0 (30.32)	717.0 (28.23)	124.0 (4.88)	18.0 (0.71)	13.0 (0.51)	25.0 (0.98)	18.0 (0.71)

D1*: Flange mounting

Table 1-12

Frame F

F2: VFD750CH23A-21, VFD1320CH43A-21

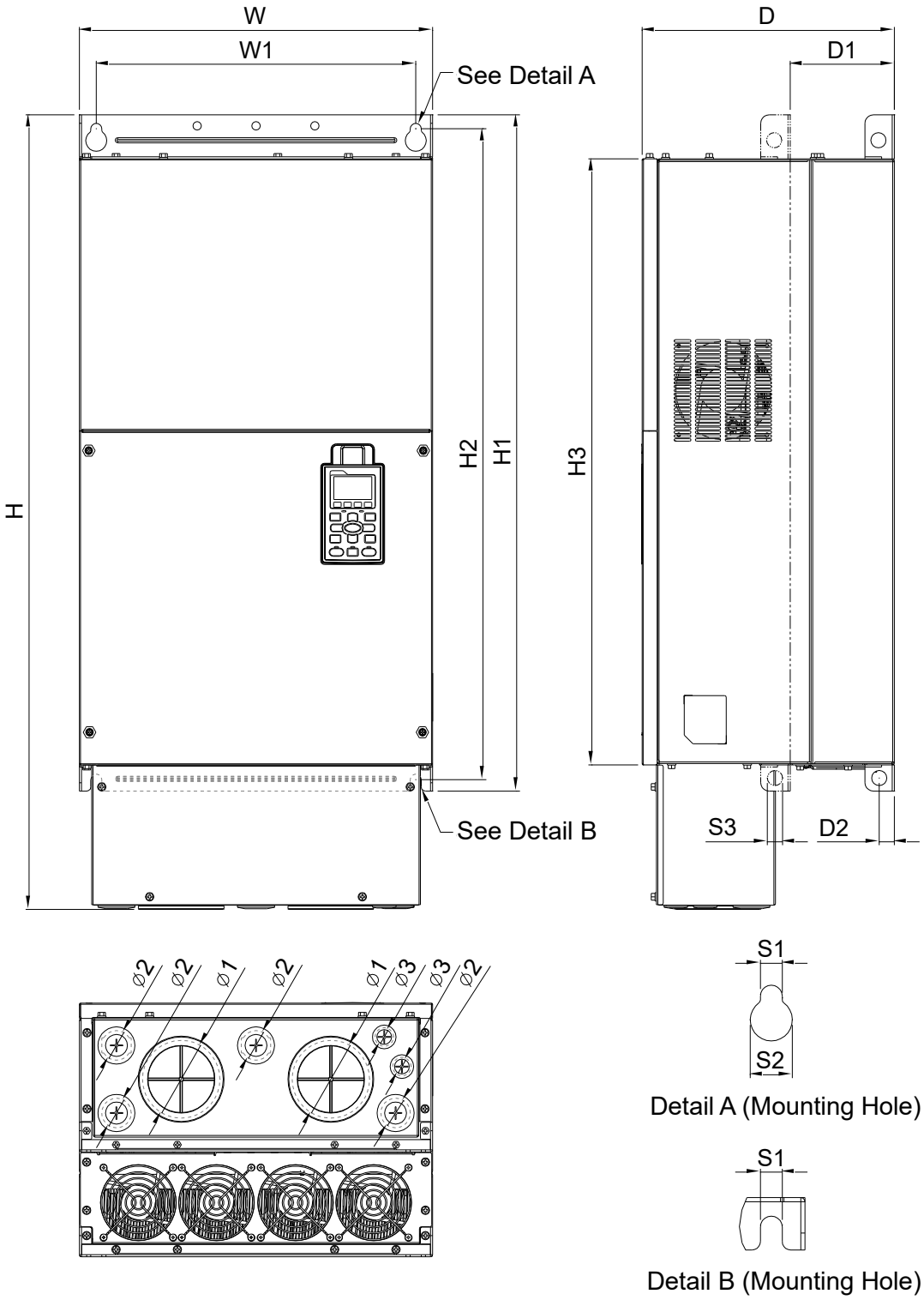

Figure 1-26

Unit: mm (inch)

Frame	W	H	D	W1	H1	H2	H3	D1*	D2	S1	S2	S3
F2	420.0 (16.54)	940.0 (37.00)	300.0 (11.81)	380.0 (14.96)	800.0 (31.50)	770.0 (30.32)	717.0 (28.23)	124.0 (4.88)	18.0 (0.71)	13.0 (0.51)	25.0 (0.98)	18.0 (0.71)

Frame	Ø1	Ø2	Ø3
F2	92.0 (3.62)	35.0 (1.38)	22.0 (0.87)

D1*: Flange mounting

Table 1-13

Frame G

G1: VFD1600CH43A-00, VFD1850CH43A-00, VFD2200CH43A-00

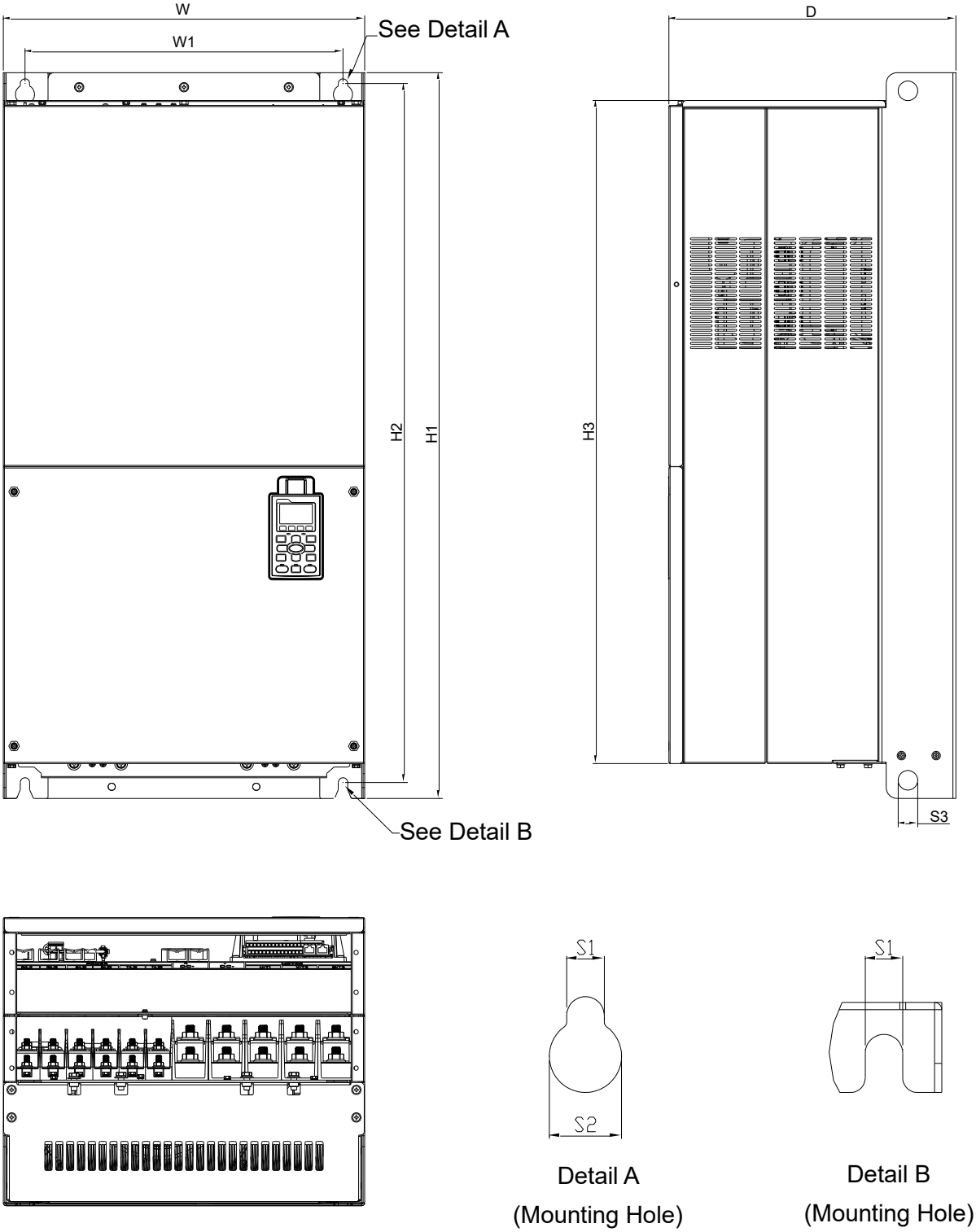

Figure 1-27

Unit: mm (inch)

Frame	W	H	D	W1	H1	H2	H3	S1	S2	S3	Ø1	Ø2	Ø3
G1	500.0 (19.69)	-	397.0 (15.63)	440.0 (217.32)	1000.0 (39.37)	963.0 (37.91)	913.6 (35.97)	13.0 (0.51)	26.5 (1.04)	27.0 (1.06)	-	-	-

Table 1-14

Frame G

G2: VFD1600CH43A-21, VFD1850CH43A-21, VFD2200CH43A-21

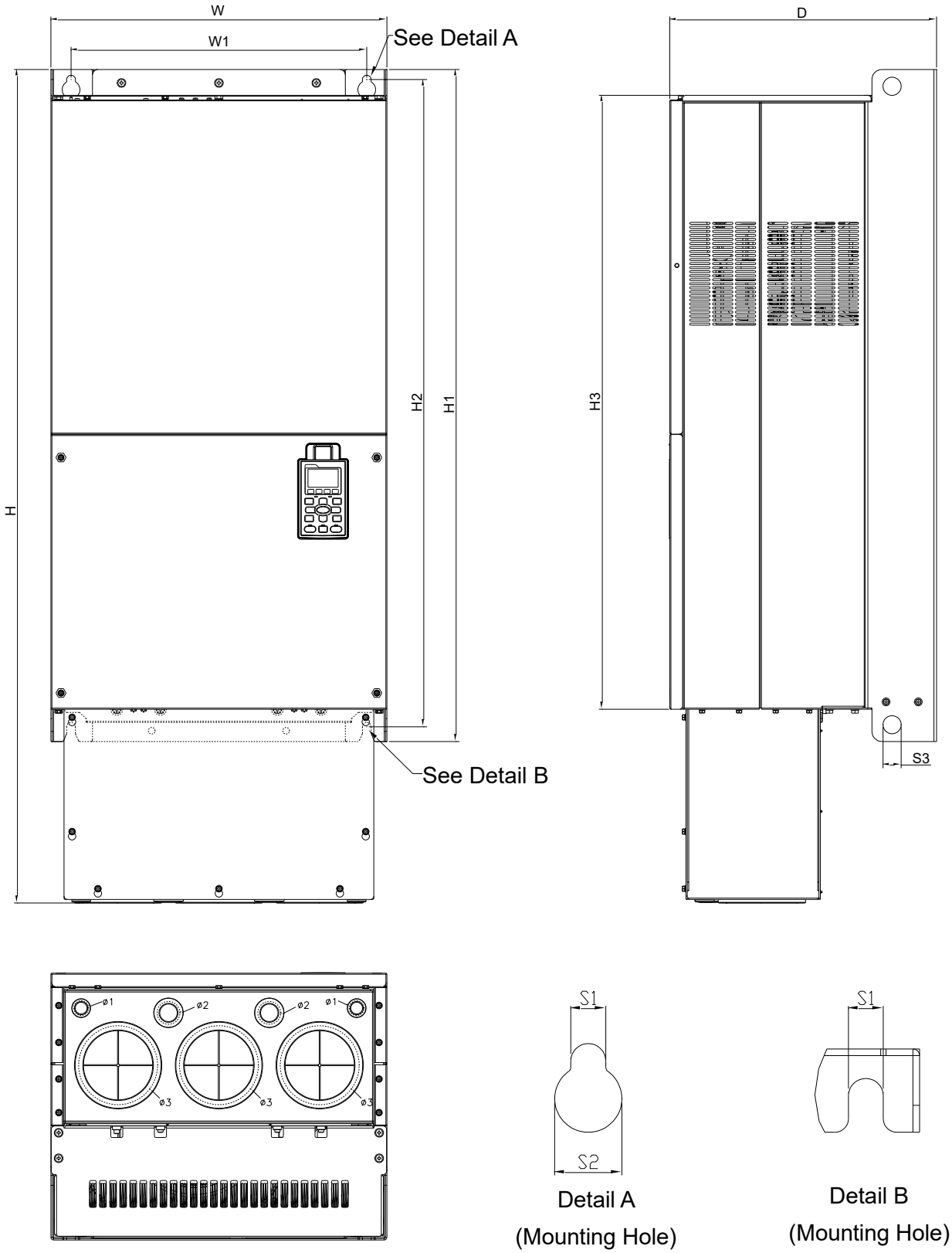

Figure 1-28

Unit: mm (inch)

Frame	W	H	D	W1	H1	H2	H3	S1	S2	S3	Ø1	Ø2	Ø3
G2	500.0 (19.69)	1240.2 (48.83)	397.0 (15.63)	440.0 (217.32)	1000.0 (39.37)	963.0 (37.91)	913.6 (35.97)	13.0 (0.51)	26.5 (1.04)	27.0 (1.06)	22.0 (0.87)	34.0 (1.34)	117.5 (4.63)

Table 1-15

Frame H

H1: VFD2800CH43A-00, VFD3150CH43A-00, VFD3550CH43A-00, VFD4500CH43A-00

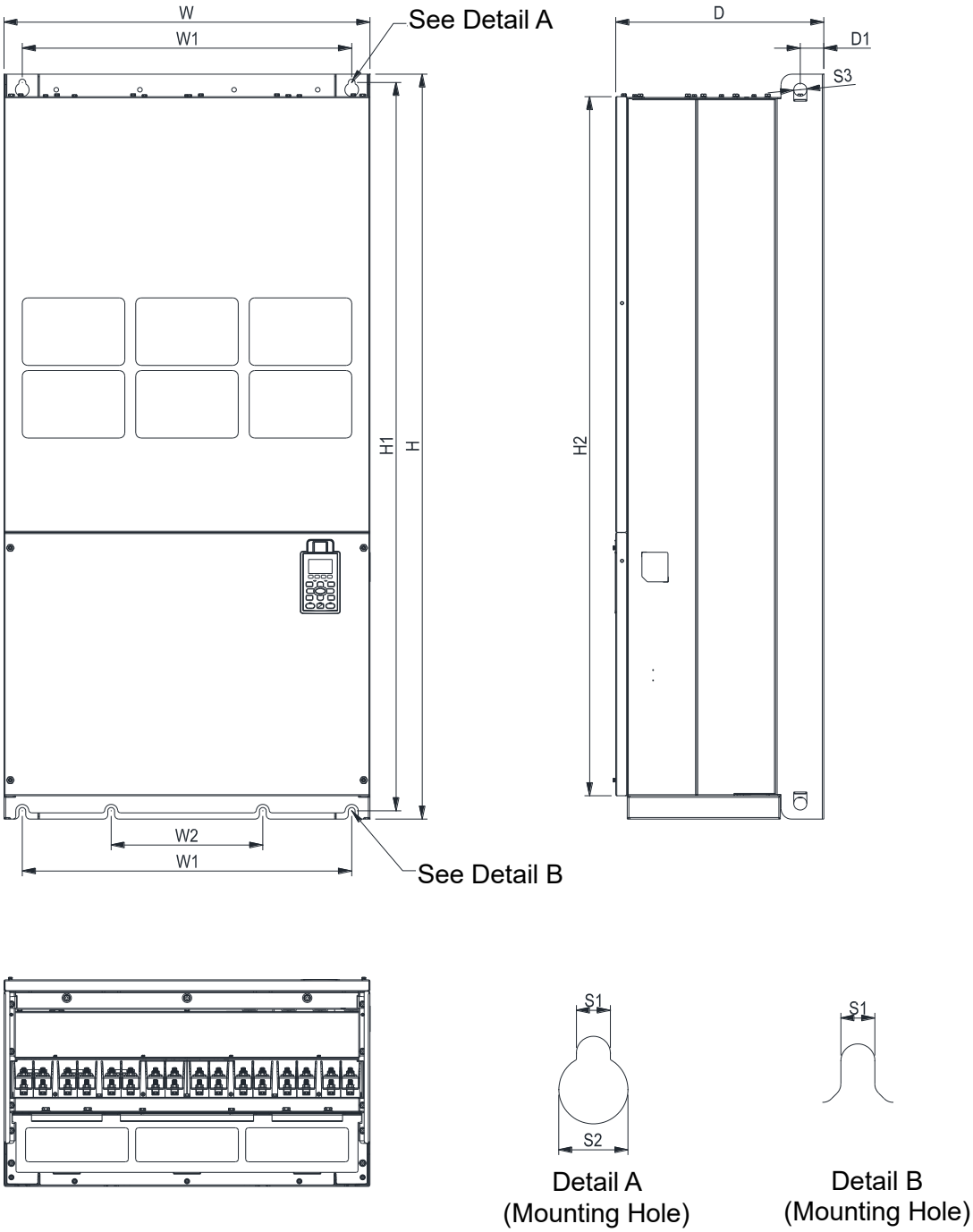

Figure 1-29

Unit: mm (inch)

Frame	W	H	D	W1	W2	W3	W4	W5	W6	H1	H2	H3	H4
H1	700.0 (27.56)	1435.0 (56.5)	398.0 (15.67)	630.0 (24.8)	290.0 (11.42)	-	-	-	-	1403.0 (55.24)	1346.6 (53.02)	-	-

Frame	H5	D1	D2	D3	D4	D5	D6	S1	S2	S3	Ø1	Ø2	Ø3
H1	-	45.0 (1.77)	-	-	-	-	-	13.0 (0.51)	26.5 (1.04)	25.0 (0.98)	-	-	-

Table 1-16

Frame H

H3: VFD2800CH43C-21, VFD3150CH43C-21, VFD3550CH43C-21, VFD4500CH43C-21

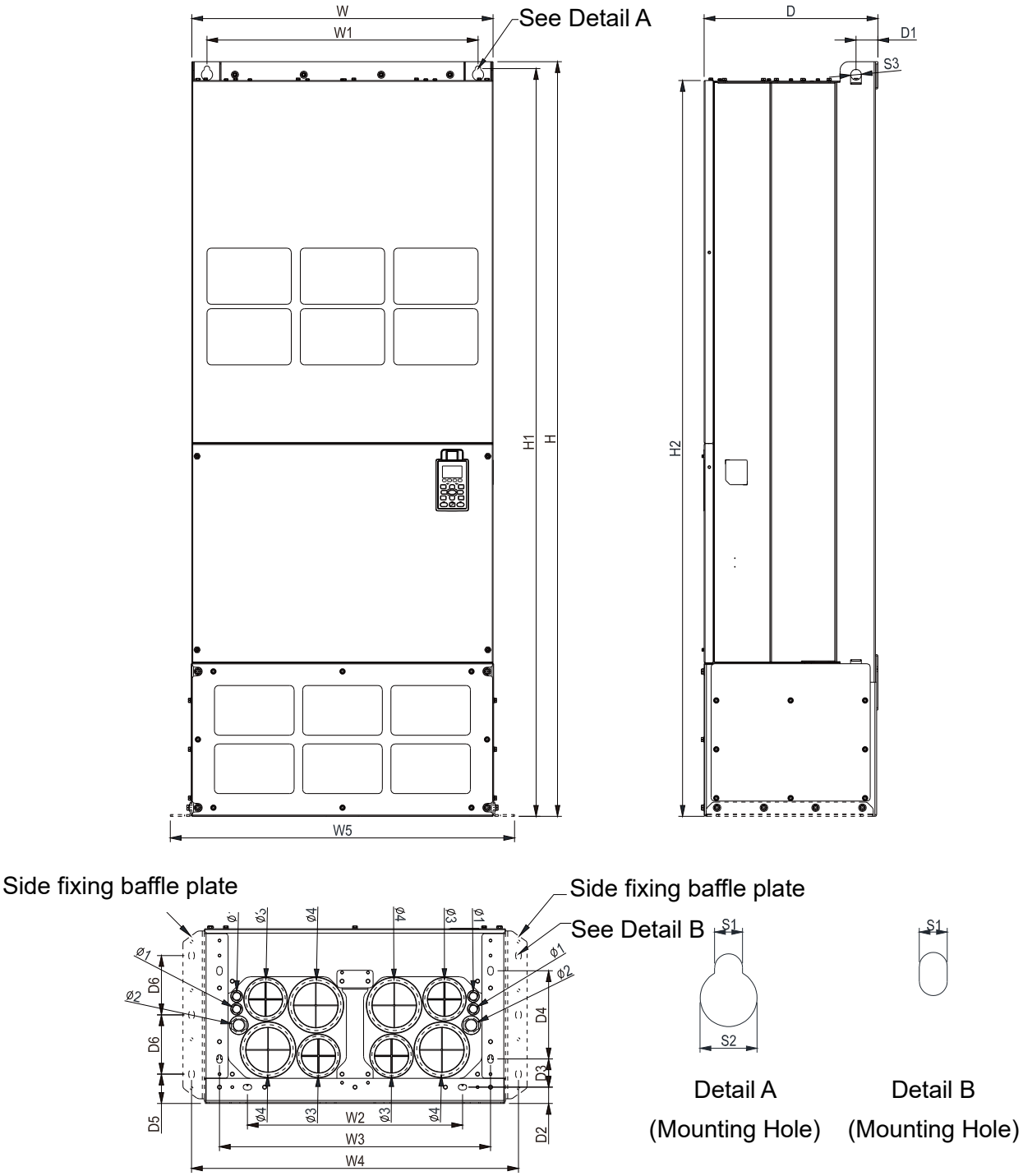

Figure 1-30

Unit: mm (inch)

Frame	W	H	D	W1	W2	W3	W4	W5	W6	H1	H2	H3	H4
H3	700.0 (27.56)	1745.0 (68.70)	404.0 (15.9)	630.0 (24.8)	500.0 (19.69)	630.0 (24.8)	760.0 (29.92)	800.0 (31.5)	-	1729.0 (68.07)	1701.6 (66.99)	-	-

Frame	D1	D2	D3	D4	D5	D6	S1	S2	S3	Ø1	Ø2	Ø3	Ø4
H3	51.0 (2.0)	38.0 (1.5)	65.0 (2.56)	204.0 (8.03)	68.0 (2.68)	137.0 (5.4)	13.0 (0.51)	26.5 (1.04)	25.0 (0.98)	22.0 (0.87)	34.0 (1.34)	91.5 (3.60)	117.5 (4.63)

Table 1-17

Digital Keypad

KPC-CC01

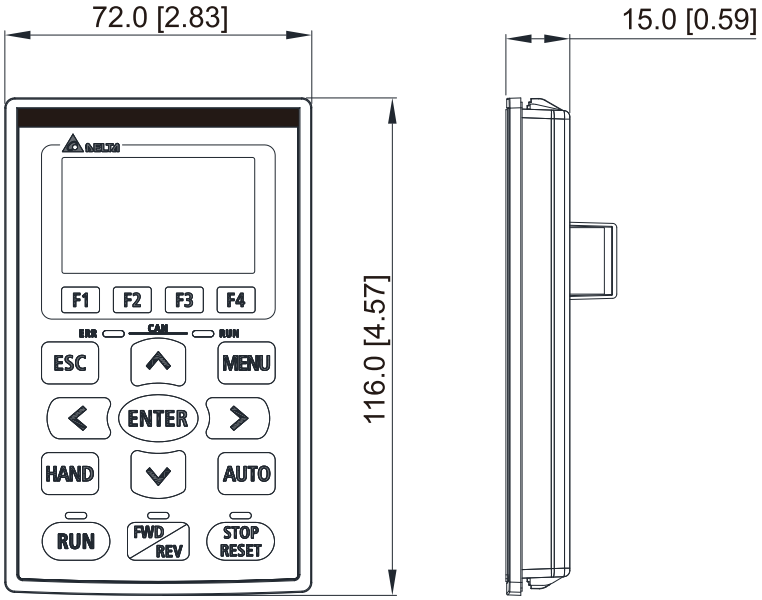

Figure 1-31

Chapter 2 Installation

2-1 Mounting Clearance

2-2 Airflow and Power Dissipation

2-1 Mounting Clearance

☑ Prevent fiber particles, scraps of paper, shredded wood, sawdust, metal particles, etc. from adhering to the heat sink.

☑ Install the AC motor drive in a metal cabinet. When installing one drive below another one, use a metal separator between the AC motor drives to prevent mutual heating and to prevent the risk of fire accident.

☑ Install the AC motor drive in Pollution Degree 2 environments with clean and circulating air. A clean and circulating environment means airs without polluting substances and dust.

The appearances shown in the following figures are for reference only. The actual motor drives may look different.

Airflow direction: (Blue arrow) Inflow: (Red arrow) Outflow: (Black) Distance

Single drive installation (Frame A–H)

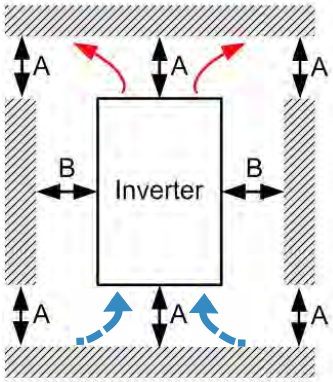

Figure 2-1

Side-by-side horizontal installation (Frame A–C)

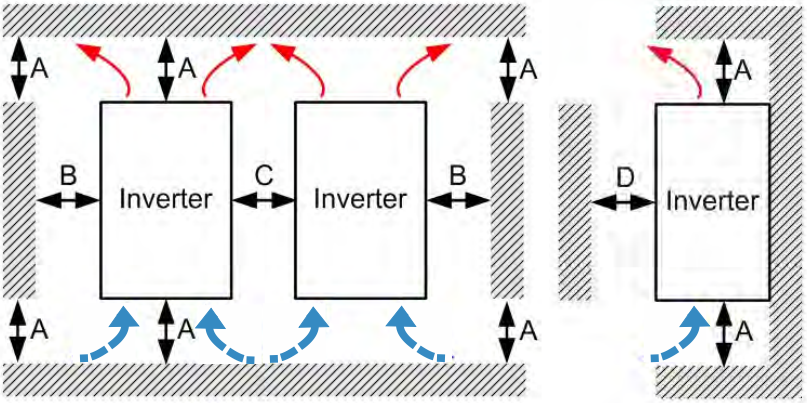

Figure 2-2

Multiple drives, single side-by-side horizontal installation (Frame A–C, G, H)

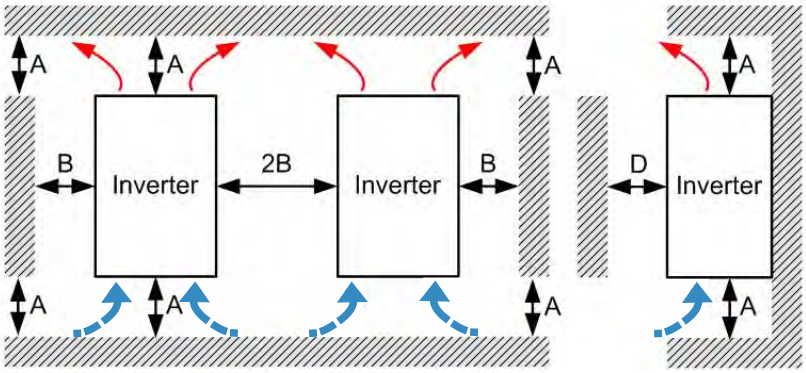

Figure 2-3

Multiple drives, side-by-side installation (Frame D0, D, E, F) Install metal separator between the drives.

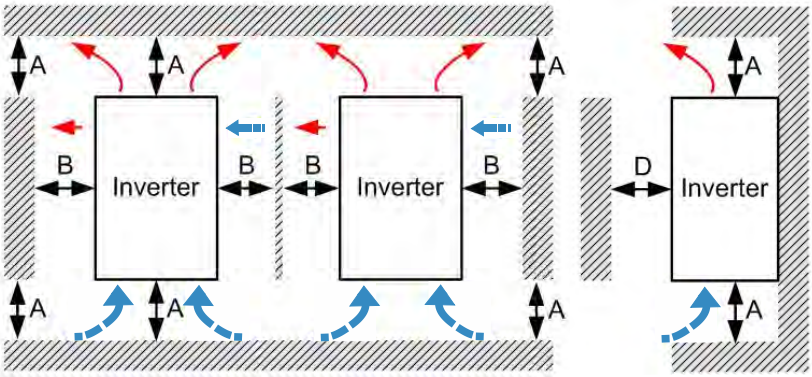

Figure 2-4

Multiple drives side-by-side vertical installation

Ta: Frame A–G Ta*: Frame H

When installing one AC motor drive below another one (top-bottom installation), use a metal separator between the drives to prevent mutual heating. The temperature measured at the fan's inflow side must be lower than the temperature measured at the operation side. If the fan's inflow temperature is higher, use a thicker or larger size of metal separator. Operation temperature is the temperature measured at 50 mm away from the fan's inflow side (as shown in the figure below).

(Frame A–C)

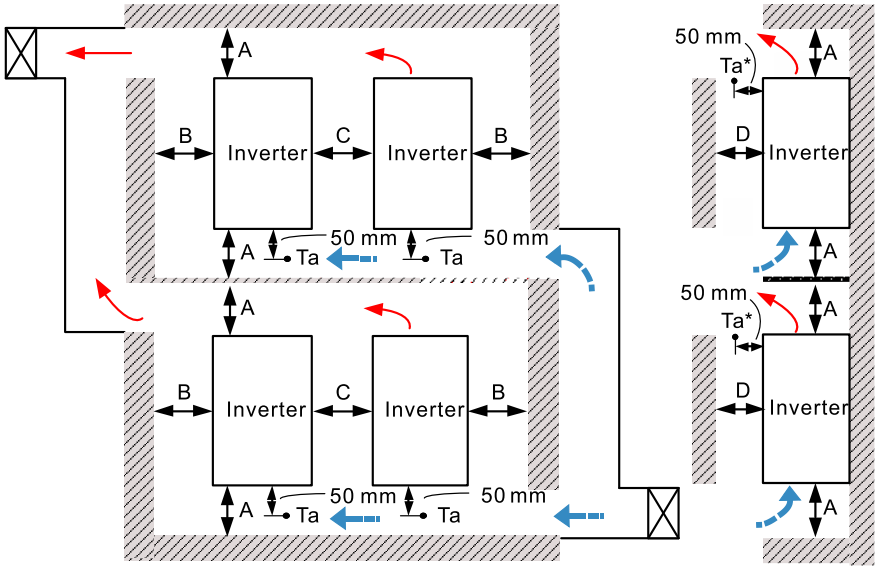

Figure 2-5

(Frame D0–G) Install metal separator between the drives

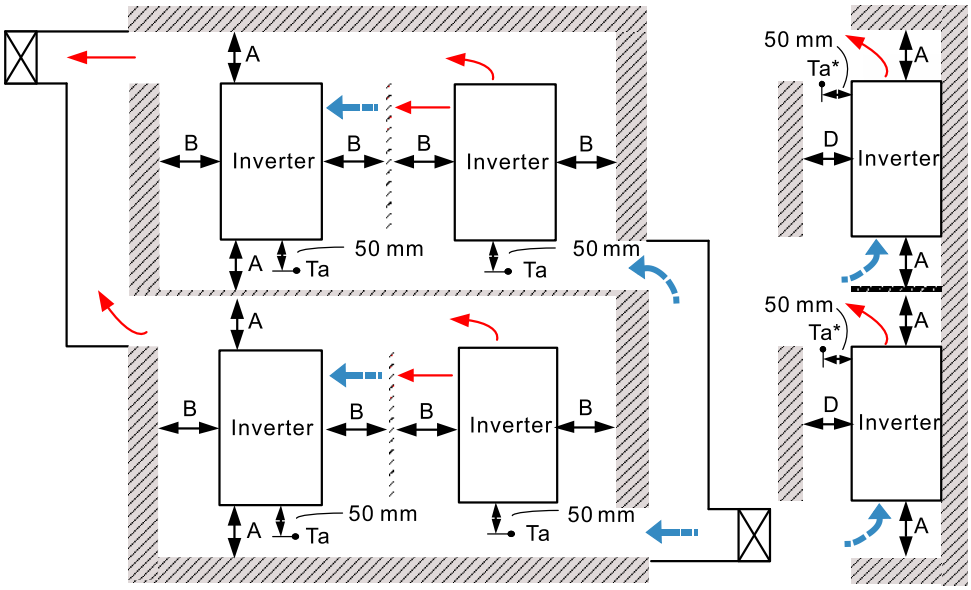

Figure 2-6

Minimum mounting clearance

Frame	A (mm)	B (mm)	C (mm)	D (mm)
A–C	60	30	10	0
D0–F	100	50	-	0
D0 (D0-3)	200	75	-	0
D (D3)	200	75	-	0
D (D3, 100 HP)	250	75	-	0
G	200	100	-	0
H*2	350	0	0	200 (100, Ta=Ta*=50°C)

Table 2-1

NOTE:

1. The minimum mounting clearances A–D stated in the table above apply to AC motor drives installation. Failing to follow the minimum mounting clearances may cause the fan to malfunction and heat dissipation problems.
2. Frame H does not have side installing holes or fans; there is no request for mounting clearance B and C.

Frame A	VFD007CH23A-21; VFD015CH23A-21; VFD022CH23A-21; VFD037CH23A-21; VFD007CH43A/4EA-21; VFD015CH43A/4EA-21; VFD022CH43A/4EA-21; VFD037CH43A/4EA-21; VFD055CH43A/4EA-21
Frame B	VFD055CH23A-21; VFD075CH23A-21; VFD110CH23A-21; VFD075CH43A/4EA-21; VFD110CH43A/4EA-21; VFD150CH43A/4EA-21
Frame C	VFD150CH23A-21; VFD185CH23A-21; VFD185CH43A/4EA-21; VFD220CH43A/4EA-21; VFD300CH43A/4EA-21
Frame D0	VFD370CH43S-00; VFD370CH43S-21; VFD370CH43L-00
Frame D	VFD220CH23A-00/-21; VFD300CH23A-00/-21; VFD370CH23A-00/-21; VFD450CH43A-00/-21; VFD550CH43A-00/-21; VFD750CH43A-00/-21; VFD450CH43L-00; VFD550CH43L-00; VFD750CH43L-00
Frame E	VFD450CH23A-00/-21; VFD550CH23A-00/-21; VFD900CH43A-00/-21; VFD1100CH43A-00/-21
Frame F	VFD750CH23A-00/-21; VFD1320CH43A-00/-21
Frame G	VFD1600CH43A-00/-21; VFD1850CH43A-00/-21; VFD2200CH43A-00/-21
Frame H	VFD2800CH43A-00; VFD3150CH43A-00; VFD3550CH43A-00; VFD4500CH43A-00; VFD2800CH43C-21; VFD3150CH43C-21; VFD3550CH43C-21; VFD4500CH43C-21

Table 2-2

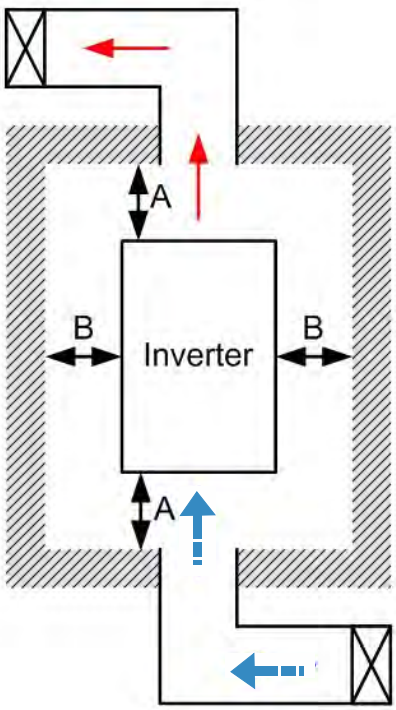

Figure 2-7

NOTE:

※ The mounting clearance stated in the figure is for installing the drive in an open area. To install the drive in a confined space (such as cabinet or electric box), follow the following rules: (1) Keep the minimum mounting clearances. (2) Install a ventilation equipment or an air conditioner to keep surrounding temperature lower than operation temperature. (3) Refer to parameter setting and set up Pr.00-16, Pr.00-17, and Pr.06-55.

※ The table below shows the heat dissipation and the required air volume when installing a single drive in a confined space. When installing multiple drives, the required air volume shall be multiplied by the number of the drives.

※ Refer to the table below (Airflow Rate for Cooling) for ventilation equipment design and selection.

※ Refer to the table below (Power Dissipation for AC Motor Drive) for air conditioner design and selection.

※ Different control mode affects the derating. See Pr.06-55 for more information.

※ Ambient temperature derating curve shows the dertaing status in different temperature in relation to different protection level.

※ Refer to Section 9-5 for ambient temperature derating curve and derating curves under different control modes.

※ If UL Type 1 models need side-by-side installation, remove the top cover for Frame A–C. Do NOT install the conduit box for Frame D and above.

2-2 Airflow and Power Dissipation

Airflow Rate for Cooling							Power Dissipation		
Model No.	Flow Rate (cfm)			Flow Rate (m^3/hr)			Power Dissipation (watt)		
	External	Internal	Total	External	Internal	Total	Loss External (Heat sink)	Internal	Total
VFD007CH23A-21	-	-	-	-	-	-	38	27	65
VFD015CH23A-21	14	-	14	24	-	24	59	31	90
VFD022CH23A-21	14	-	14	24	-	24	80	36	116
VFD037CH23A-21	10	-	10	17	-	17	127	46	173
VFD055CH23A-21	40	14	54	68	24	92	223	67	290
VFD075CH23A-21	66	14	80	112	24	136	306	86	392
VFD110CH23A-21	58	14	72	99	24	136	432	121	553
VFD150CH23A-21	166	12	178	282	20	302	499	161	660
VFD185CH23A-21	166	12	178	282	20	302	589	184	773
VFD220CH23A-21	179	30	209	304	51	355	737	216	953
VFD300CH23A-21	179	30	209	304	51	355	1001	186	1187
VFD370CH23A-00/23A-21	179	30	209	304	51	355	1064	220	1284
VFD450CH23A-00/23A-21	228	73	301	387	124	511	1238	267	1505
VFD550CH23A-00/23A-21	246	73	319	418	124	542	1505	308	1813
VFD750CH23A-00/23A-21	224	112	346	381	190	571	1758	369	2127
VFD007CH43A/4EA-21	-	-	-	-	-	-	43	25	68
VFD015CH43A/4EA-21	14	-	14	24	-	24	59	29	88
VFD022CH43A/4EA-21	14	-	14	24	-	24	76	33	109
VFD037CH43A/4EA-21	10	-	10	17	-	17	118	42	160
VFD055CH43A/4EA-21	14	-	14	24	-	24	152	46	198
VFD075CH43A/4EA-21	40	14	54	68	24	92	260	76	336
VFD110CH43A/4EA-21	58	14	72	99	24	124	348	93	441
VFD150CH43A/4EA-21	58	14	72	99	24	124	469	122	591
VFD185CH43A/4EA-21	99	21	120	168	36	204	445	138	583
VFD220CH43A/4EA-21	99	21	120	168	36	204	509	158	667
VFD300CH43A/4EA-21	99	21	120	168	36	204	655	211	866
VFD370CH43S-00/43S-21/43L-00	179	30	209	304	51	355	809	184	993
VFD370CH4EA-21	147	30	177	248	21	269	863	184	1047
VFD450CH43A-00/43A-21/43L-00	179	30	209	304	51	355	1162	218	1380
VFD550CH43A-00/43A-21/43L-00	186	30	216	316	51	367	1384	257	1641
VFD750CH43A-00/43A-21/43L-00	186	30	216	316	51	367	1878	334	2212
VFD900CH43A-00/43A-21	257	73	330	437	124	561	1878	399	2277
VFD1100CH43A-00/43A-21	223	73	296	379	124	503	2336	491	2827
VFD1320CH43A-00/43A-21	224	112	336	381	190	571	2680	579	3259
VFD1600CH43A-00/43A-21			454			771			4179

Airflow Rate for Cooling							Power Dissipation		
Model No.	Flow Rate (cfm)			Flow Rate (m^3/hr)			Power Dissipation (watt)		
	External	Internal	Total	External	Internal	Total	Loss External (Heat sink)	Internal	Total
VFD1850CH43A-00/43A-21			454			771			5011
VFD2200CH43A-00/43A-21			454			771			6168
VFD2800CH43A-00/43C-21			769			1307			7059
VFD3150CH43A-00/43C-21			952.9			1618.9			7875
VFD3550CH43A-00/43C-21			952.9			1618.9			8875
VFD4500CH43A-00/43C-21			952.9			1618.9			12400
※ The required airflow shown in the table is for installing single drive in a confined space. ※ When installing multiple drives, the required air volume should be the required air volume for single drive × the number of the drives.							※ The heat dissipation shown in the table is for installing single drive in a confined space. ※ When installing multiple drives, volume of heat dissipation should be the heat dissipated for single drive × the number of the drives. ※ Heat dissipation for each model is calculated by rated voltage, current and default carrier.		

Table 2-3

Chapter 3 Unpacking

3-1 Unpacking

3-2 The Lifting Hook

The AC motor drive should be kept in the shipping carton or crate before installation. In order to retain the warranty coverage, the AC motor drive should be stored properly when it is not to be used for an extended period of time.

3-1 Unpacking

The AC motor drive is packed in the crate. Follows the following step for unpack:

Frame E	
Crate 1 (VFDXXXXCHXXA-00)	Crate 2 (VFDXXXXCHXXA-21)
Loosen the 4 screws on the iron plates. There are 4 iron plates and in total of 16 screws. 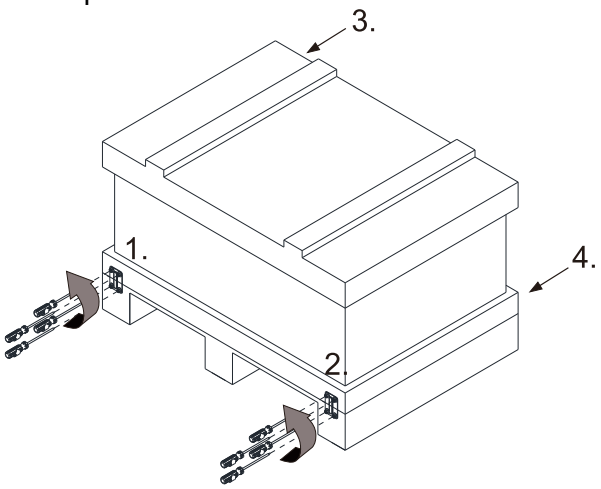 Figure 3-1	Loosen the 4 screws on the iron plates. There are 4 iron plates and in total of 16 screws. 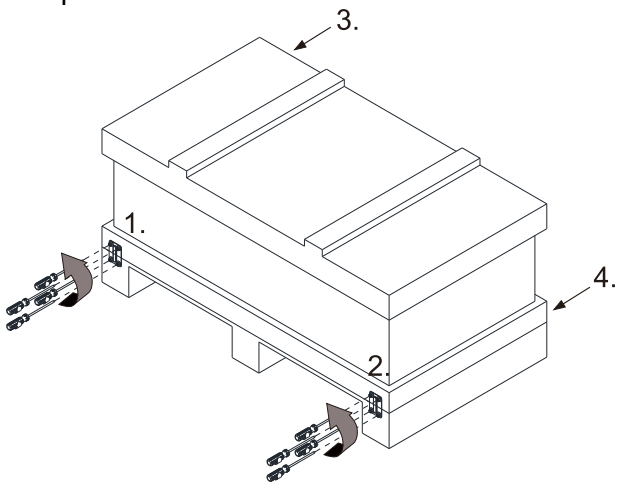 Figure 3-2
Remove the crate cover, EPEs and manual. 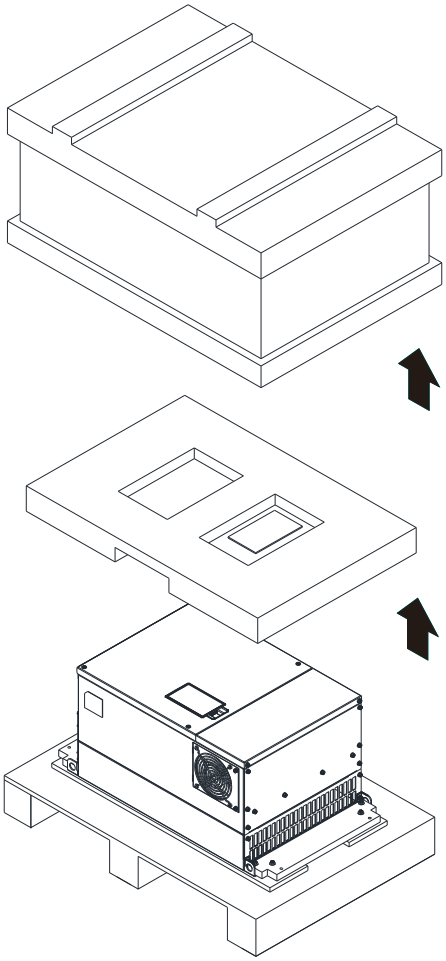 Figure 3-3	Remove the crate cover, EPEs, rubbers and manual. 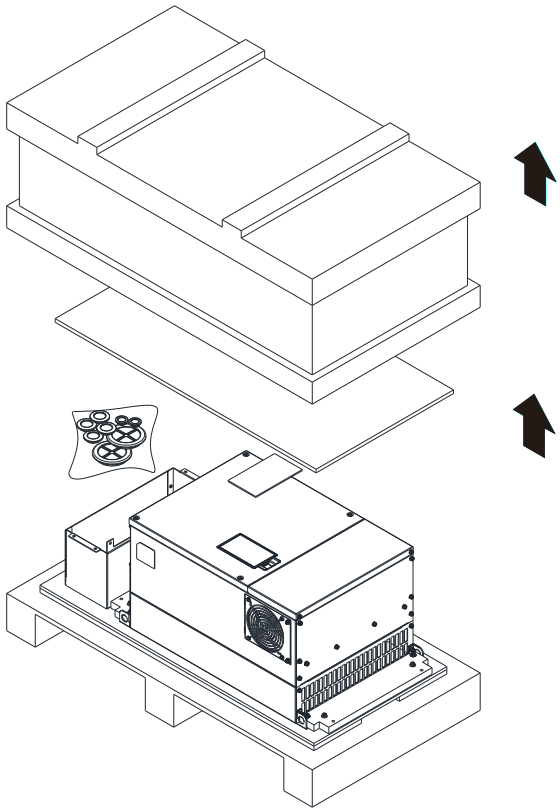 Figure 3-4

Loosen the 8 screws on the pallet as shown in the following figure. 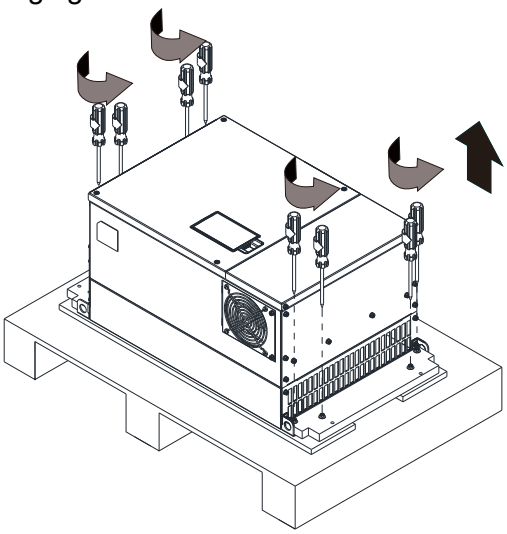 Figure 3-5	Loosen the 10 screws on the pallet and remove the wooden plate. 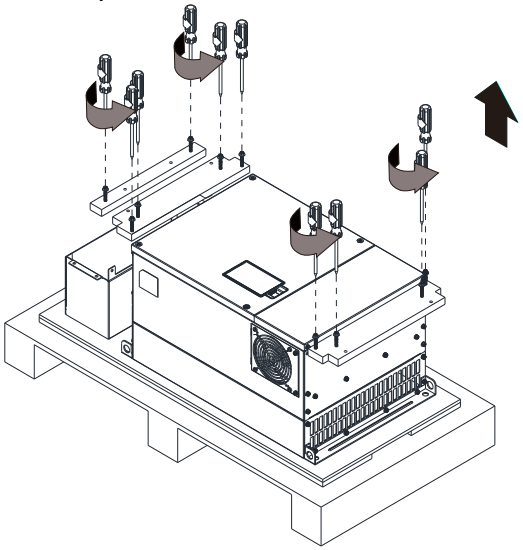 Figure 3-6
Lift the drive by hooking the lifting hole. It is now ready for installation. 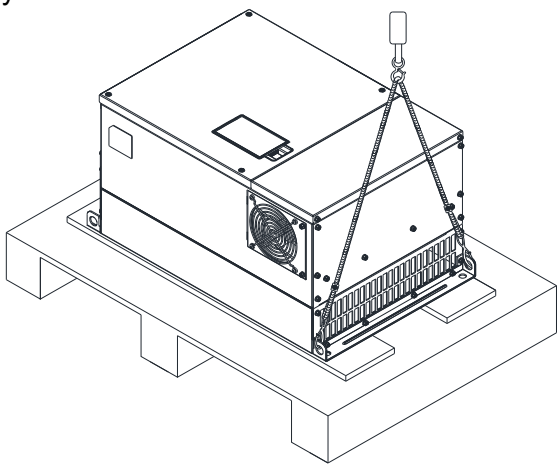 Figure 3-7	Lift the drive by hooking the lifting hole. It is now ready for installation. 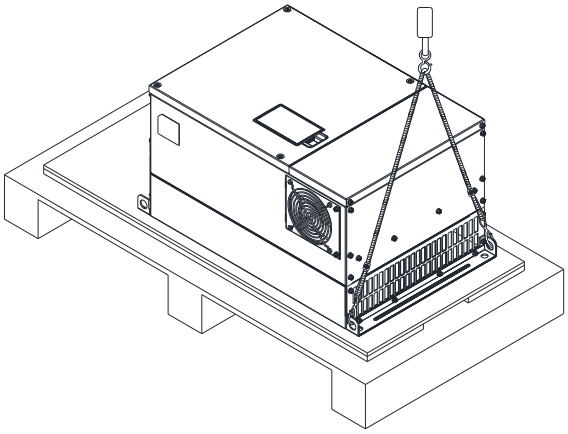 Figure 3-8

Frame F	
Crate 1 (VFDXXXXCHXXA-00) Remove the 6 clips on the side of the crate with a flat-head screwdriver. (As shown in figure below.) 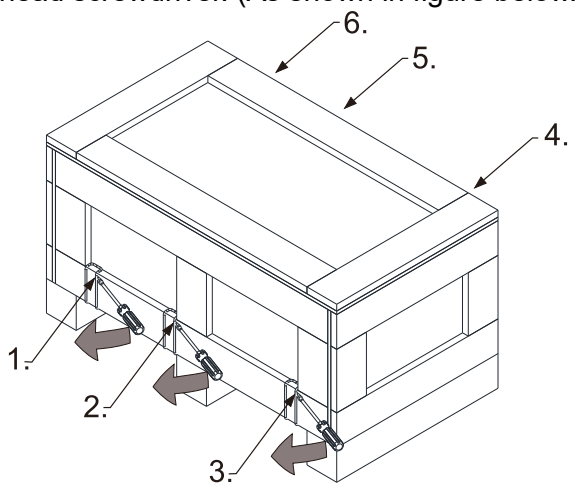 Figure 3-9	Crate 2 (VFDXXXXCHXXA-21) Remove the 6 clips on the side of the crate with a flat-head screwdriver. (As shown in figure below.) 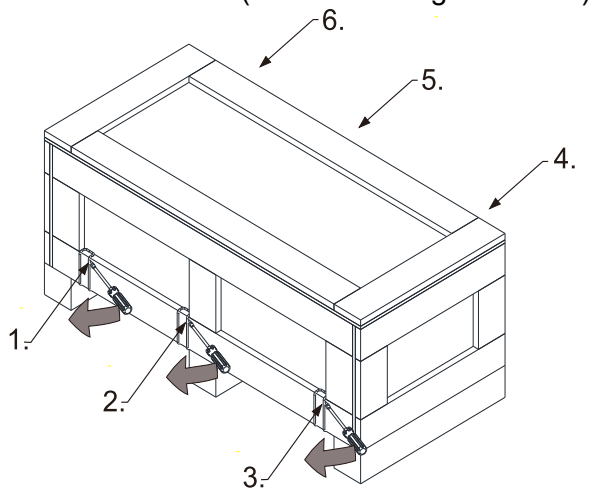 Figure 3-10
Remove the crate cover, EPEs and manual. 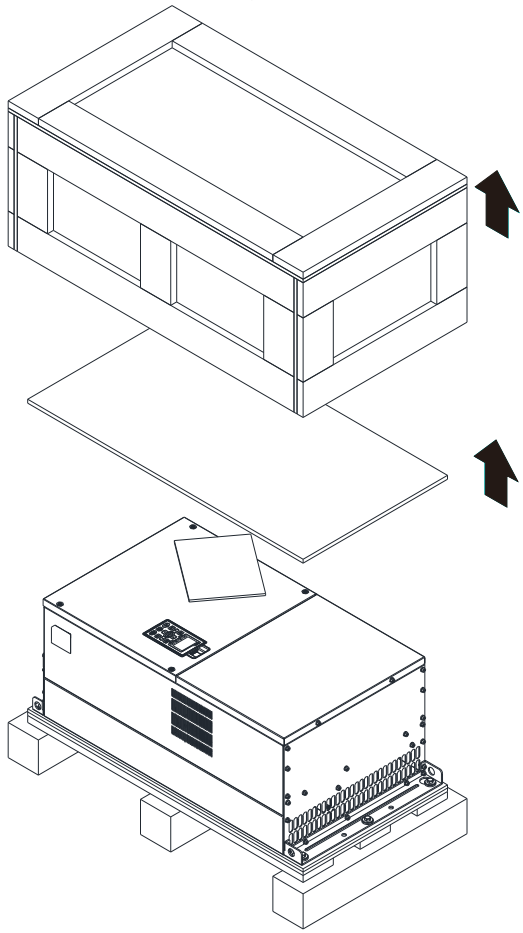 Figure 3-11	Remove the crate cover, EPEs, rubbers and manual. 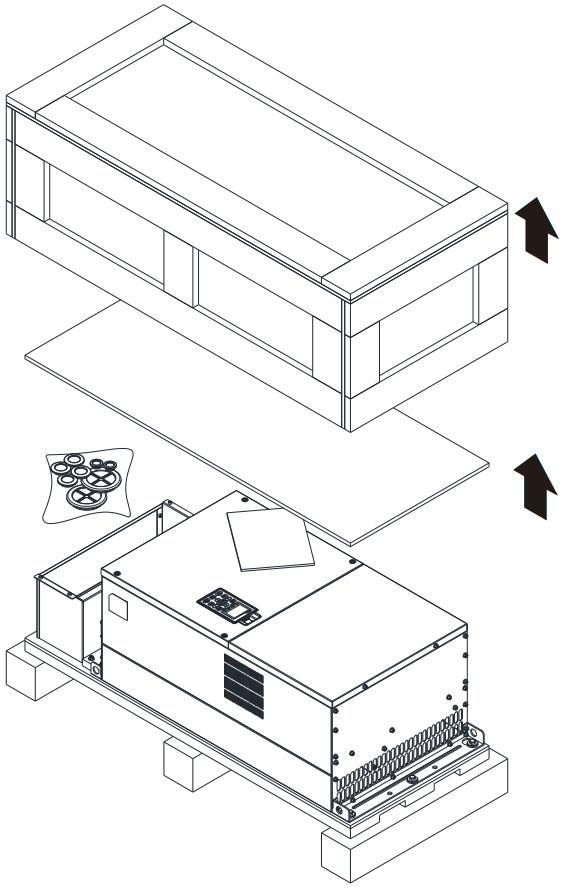 Figure 3-12

Loosen the 5 screws on the pallet as shown in the following figure.

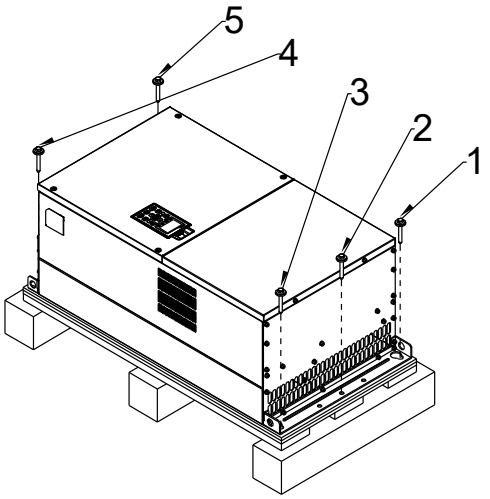

Figure 3-13

Loosen the 9 screws on the pallet and remove the wooden plate.

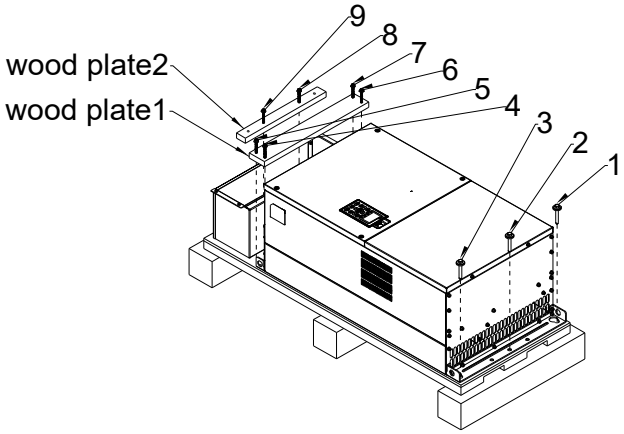

Figure 3-14

Lift the drive by hooking the lifting hole. It is now ready for installation

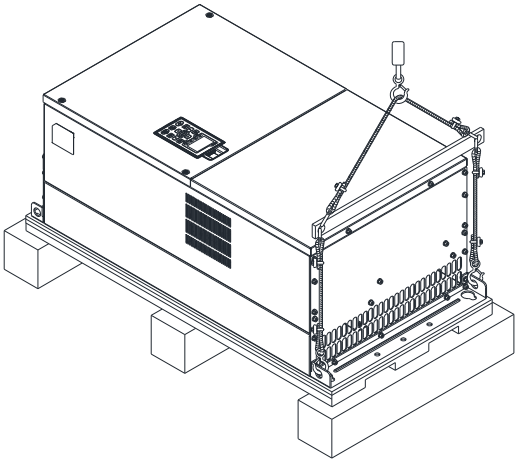

.

Figure 3-15

Lift the drive by hooking the lifting hole. It is now ready for installation.

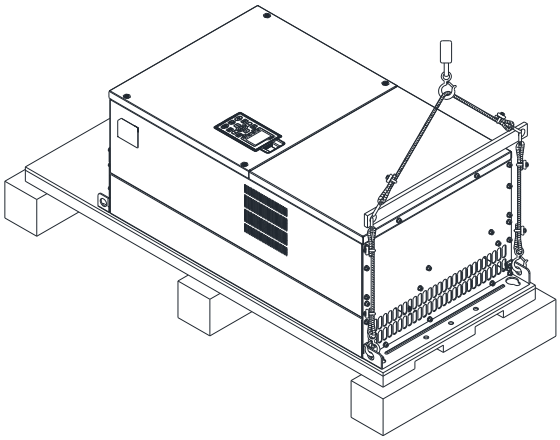

Figure 3-16

Frame G	
Crate 1 (VFDXXXXCHXXA-00) Remove the 6 clips on the side of the crate with a flathead screwdriver. (As shown in figure below.) 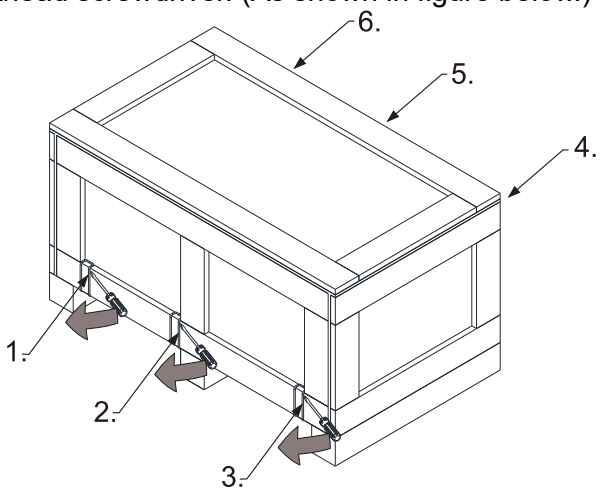 Figure 3-17	Crate 2 (VFDXXXXCHXXA-21) Remove the 6 clips on the side of the crate with a flathead screwdriver. (As shown in figure below.) 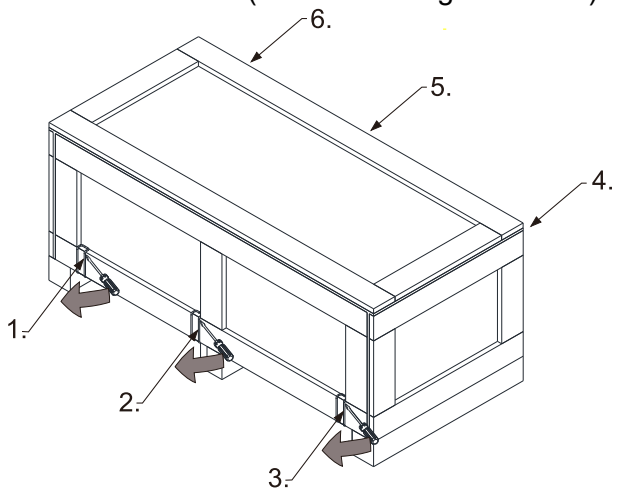 Figure 3-18
Remove the crate cover, EPEs and manual. 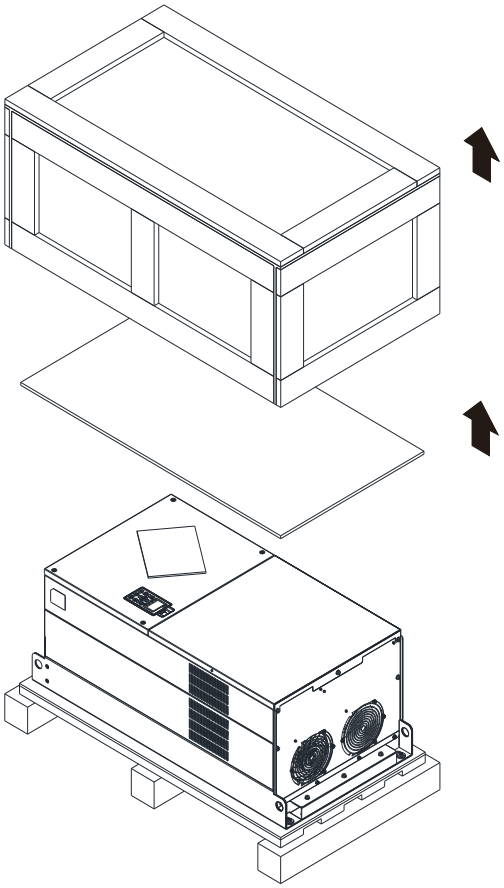 Figure 3-19	Remove the crate cover, EPEs, rubber and manual. 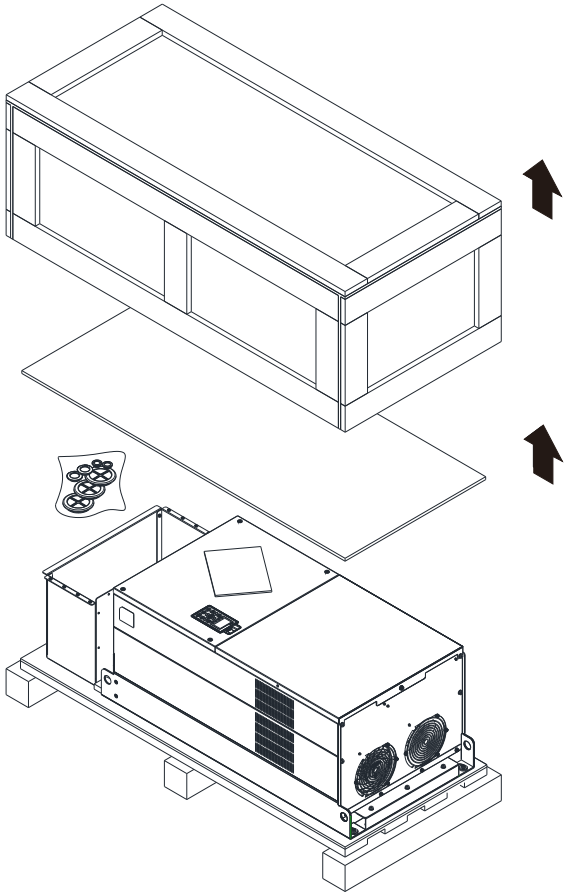 Figure 3-20

Loosen the 5 screws as shown in following figure:

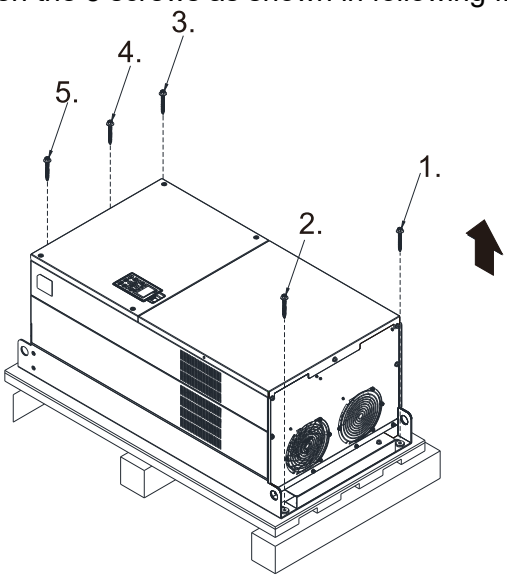

Figure 3-21

Loosen the 12 screws and remove the wooden plate.

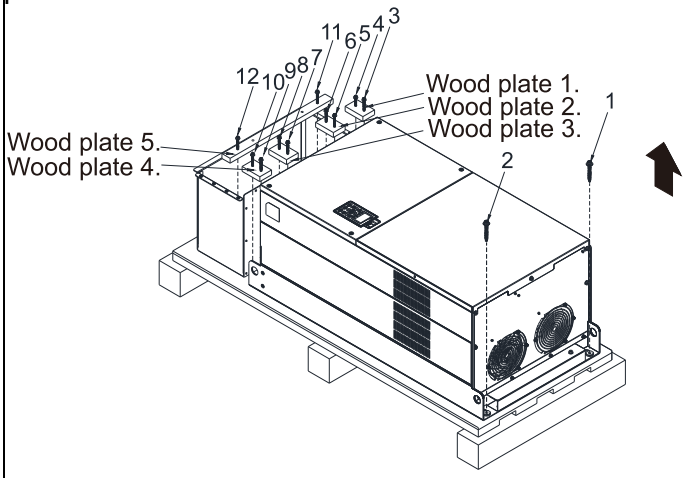

Figure 3-22

Lift the drive by hooking the lifting hole. It is now ready for installation.

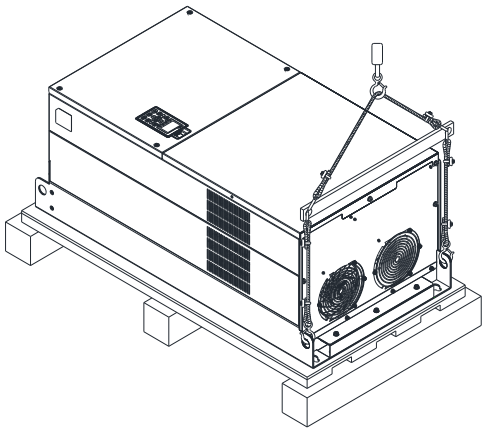

Figure 3-23

Lift the drive by hooking the lifting hole. It is now ready for installation.

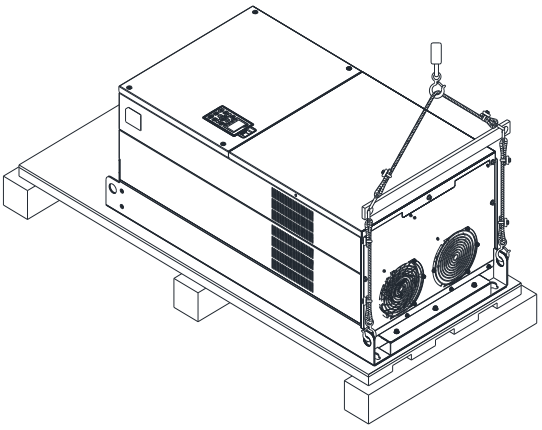

Figure 3-24

Frame H	
Crate 1 (VFDXXXXCHXXA-00) Remove the 8 clips on the side of the crate with a flathead screwdriver. (As shown in figure below.) 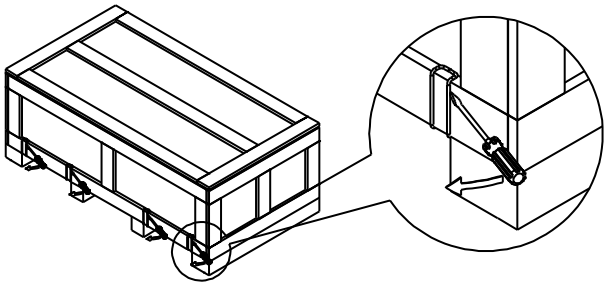 Figure 3-25	Crate 2 (VFDXXXXCHXXC-00) Remove the 8 clips on the side of the crate with a flathead screwdriver. (As shown in figure below.) 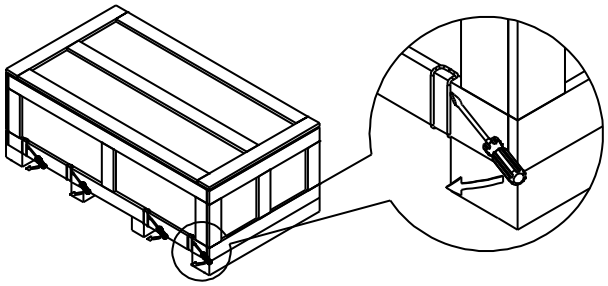 Figure 3-26
Remove the crate cover, EPEs and manual. 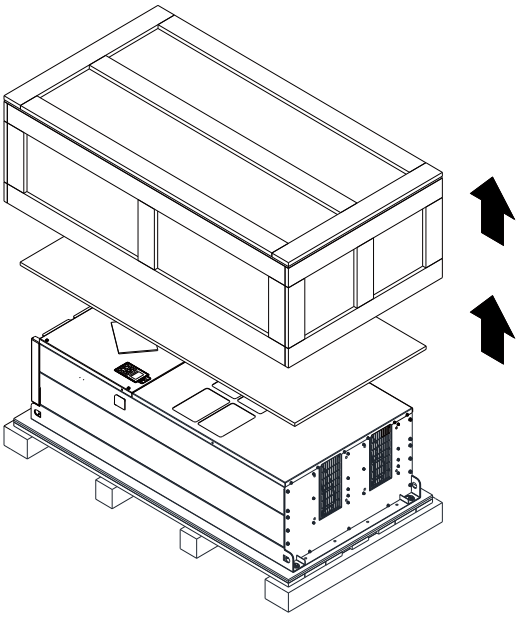 Figure 3-27	Remove the crate cover, EPEs, rubbers and manual. 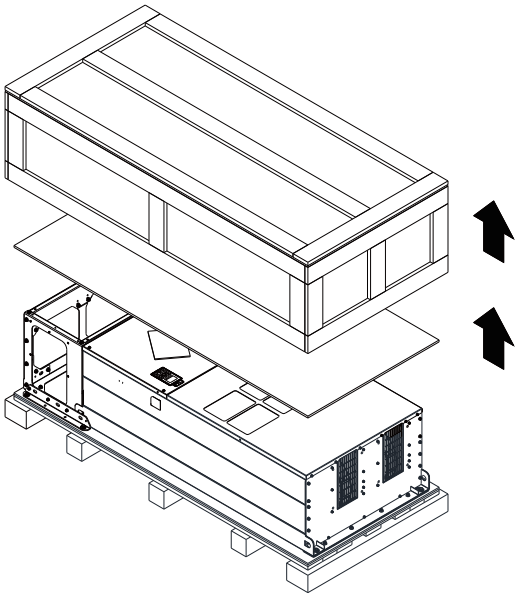 Figure 3-28
Loosen the 6 screws on the top then remove 6 metal washers and 6 plastic washers as shown in figure below. 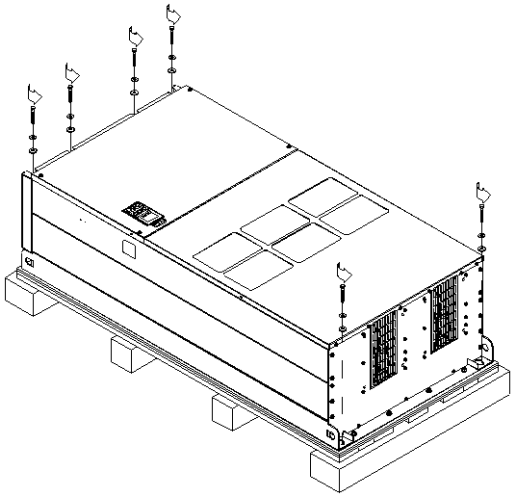 Figure 3-29	Loosen the 6 screws on the top then remove 6 metal washers and 6 plastic washers as shown in figure below. 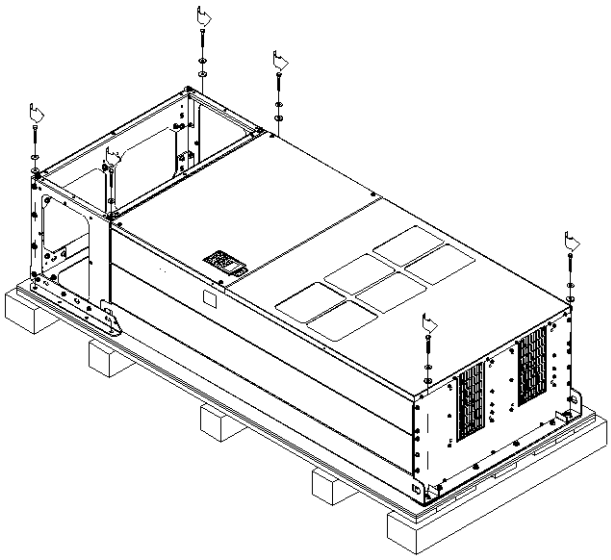 Figure 3-30

Lift the drive by hooking the lifting hole. It is now ready for installation.

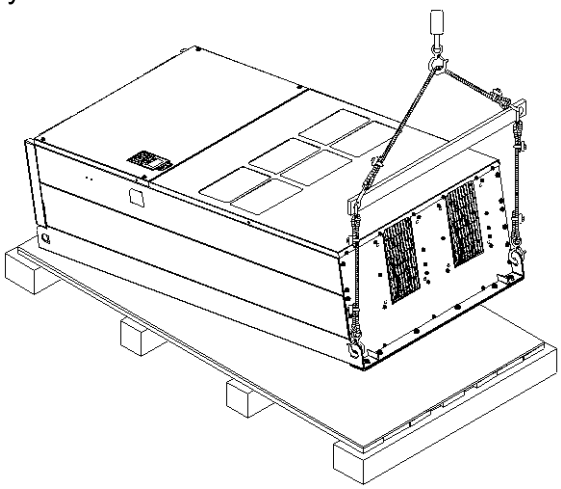

Figure 3-31

Loosen 6 of the M6 screws on the side and remove the 2 plates, as shown in below. The removed screws and plates can be used to secure the AC motor drive from the external.

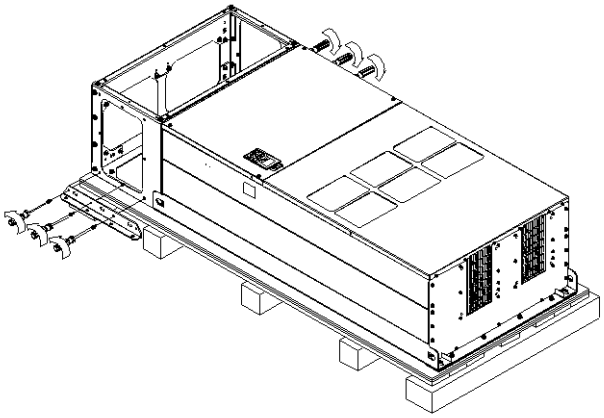

Figure 3-32

Fix the drive from the outside. (Skip to the next step if this situation does not apply to you.)
Loosen 8 of M8 screws on the both sides and place the 2 plates that were removed from the last step. Fix the plates to the AC motor drive by fasten 8 of the M8 screws. (As shown in below)
Torque: 150–180 kg-cm / (130.20–156.24 lb-in.) / (14.7–17.6 Nm)

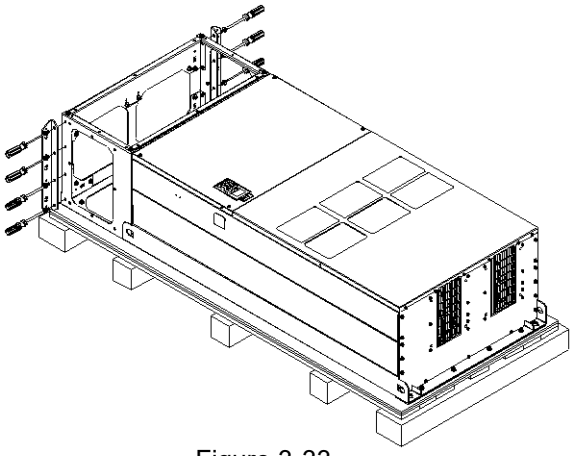

Figure 3-33

Lift the drive by hooking the lifting hole. It is now ready for installation.

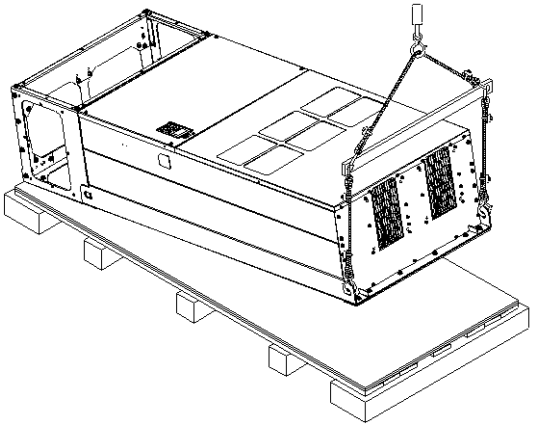

Figure 3-34

Frame H

Crate 3 (VFDXXXXCHXXC-21)

Use flathead screwdriver to remove the clips on the side of the crate, 8 clips in total (as shown below).

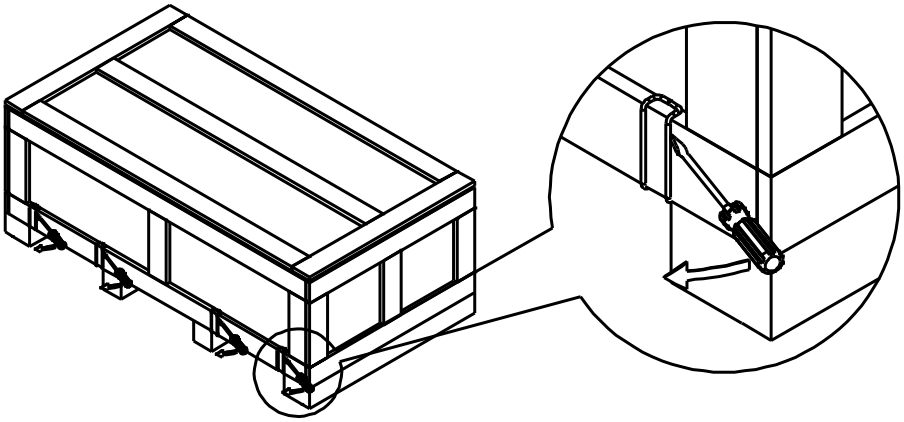

Figure 3-35

Remove the crate cover, EPEs, rubber and manual.

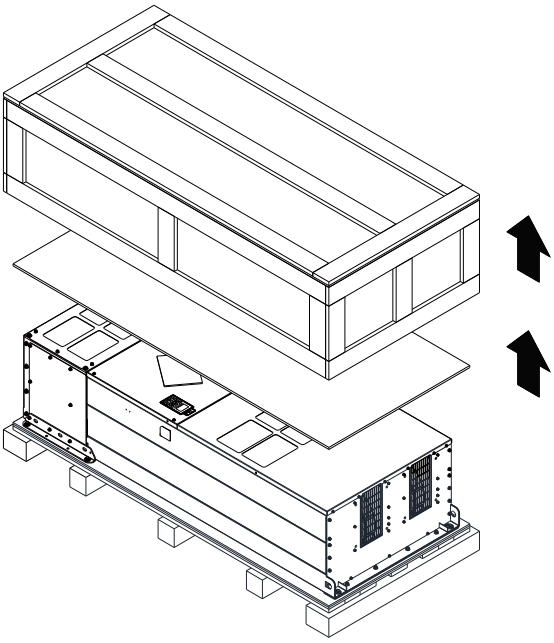

Figure 3-36

Loosen the 6 screws on the cover, remove 6 metal washers and 6 plastic washers as shown in below:

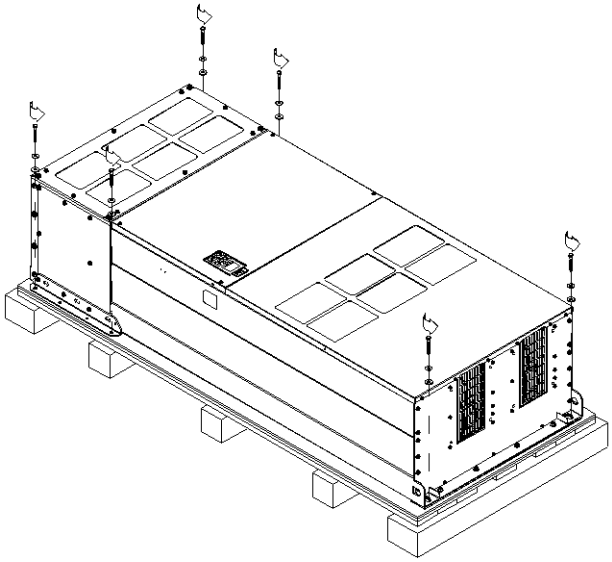

Figure 3-37

Loosen 6 of the M6 screws on the side and removes the 2 plates, as shown in following figure. You can use the removed screws to fix the AC motor drive from the outside.

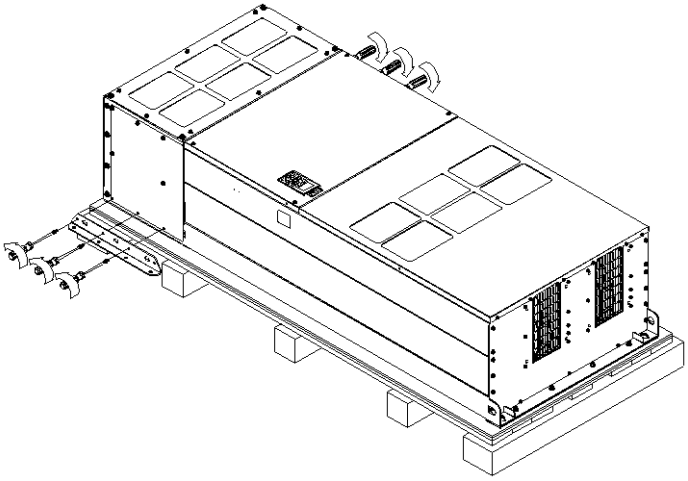

Figure 3-38

Fix the drive from the inside

Loosen 18 of the M6 screws and remove the top cover (see the figure 3-41). After fixing the drive and the cover for cables (see figure 3-39), fasten the other covers back (see the figure 3-42).
Torque: 35–45kg-cm / (30.38–39.06lb-in.) / (3.4–4.4 Nm)

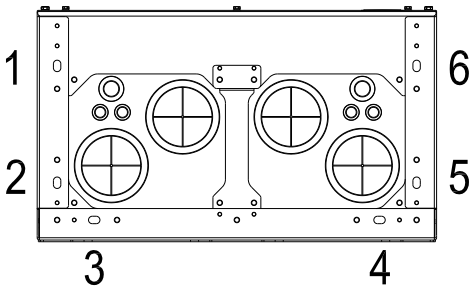

Figure 3-39
Top cover (Use M12 screws)

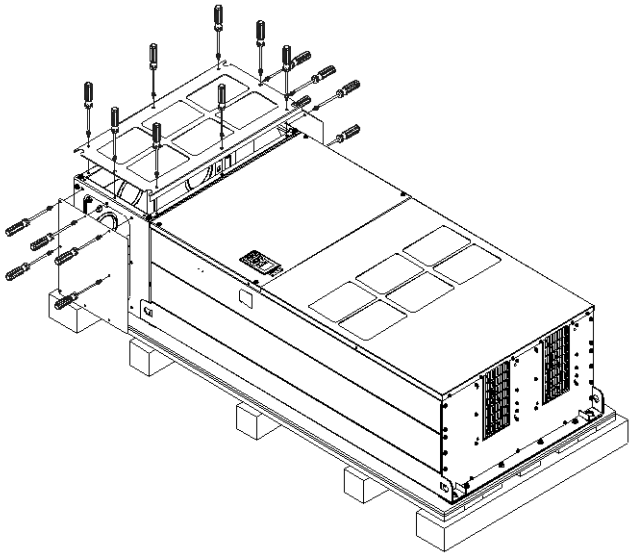

Figure 3-41

Fix the drive from the outside

Loosen 8 of the M8 screws on the both sides and place the 2 plates that were removed from the last step. Fix the plates to drive by fasten 8 of the M8 screws. (As shown in figure below).
Torque: 150–180kg-cm / (130.20–156.24lb-in.) / (14.7–17.6 Nm)

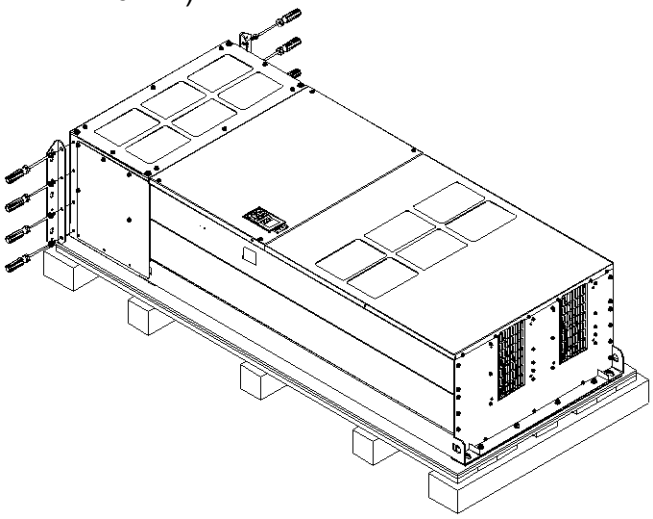

Figure 3-40

Fasten the six M6 screws back, as shown in the figure 3-42.

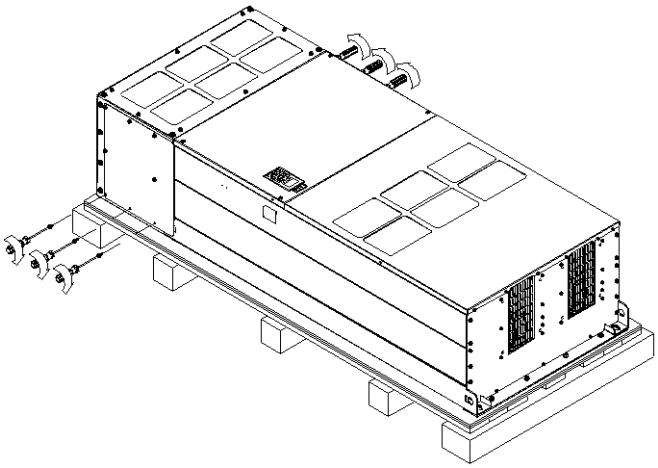

Figure 3-42

Fasten the six M6 screws back, see the figure 3-42.
Torque: 35–45 kg-cm / (30.38–39.06 lb-in) / (3.4–4.4 Nm)

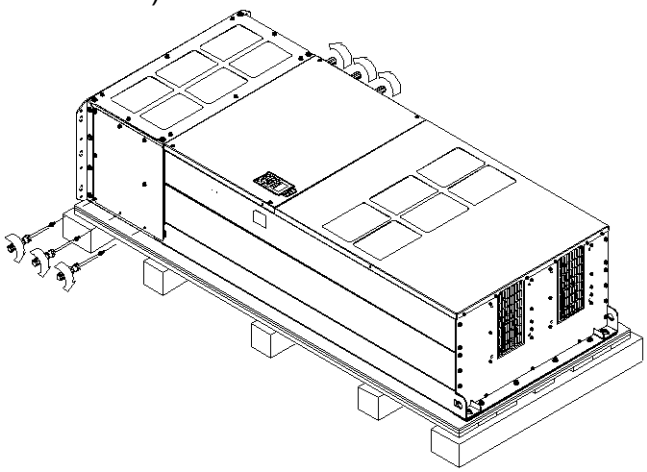

Figure 3-43

Lift the drive by hooking the lifting hole. It is now ready for installation.

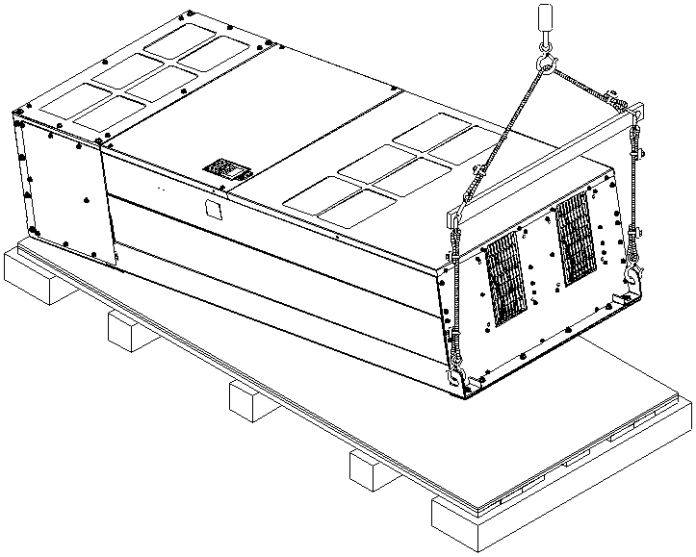

Figure 3-44

Frame H: Fix the drive

(VFDXXXXCH43A-00)

Screw: M12*6

Torque: 340–420kg-cm / (295.1–364.6lb-in.) / (33.3–41.2 Nm)

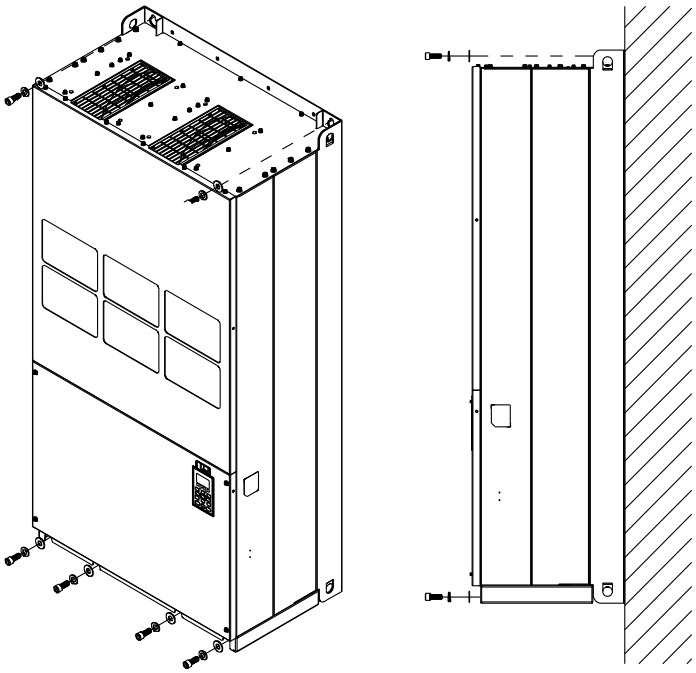

Figure 3-45

VFDXXXXCH43C-21

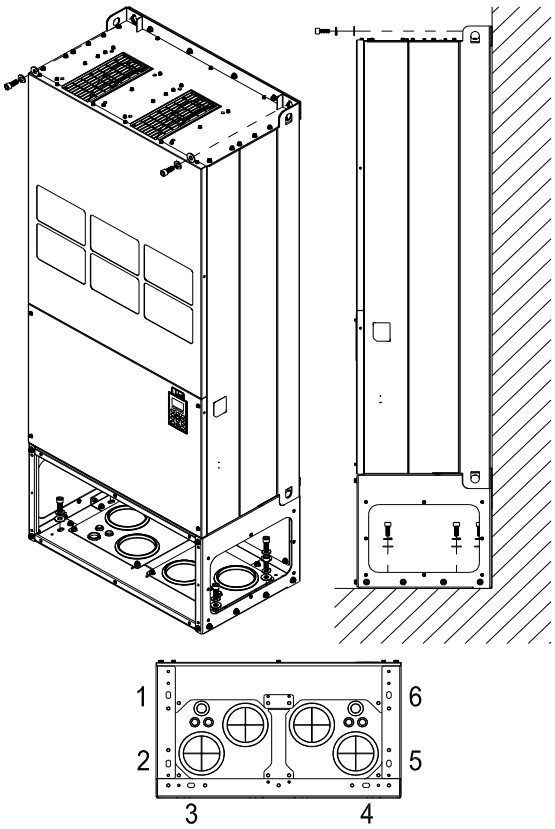

Fix the drive from the inside.

Screw: M12*8

Torque: 340–420 kg-cm / (295.1–364.6 lb-in) / (33.3–41.2 Nm)

Figure 3-46

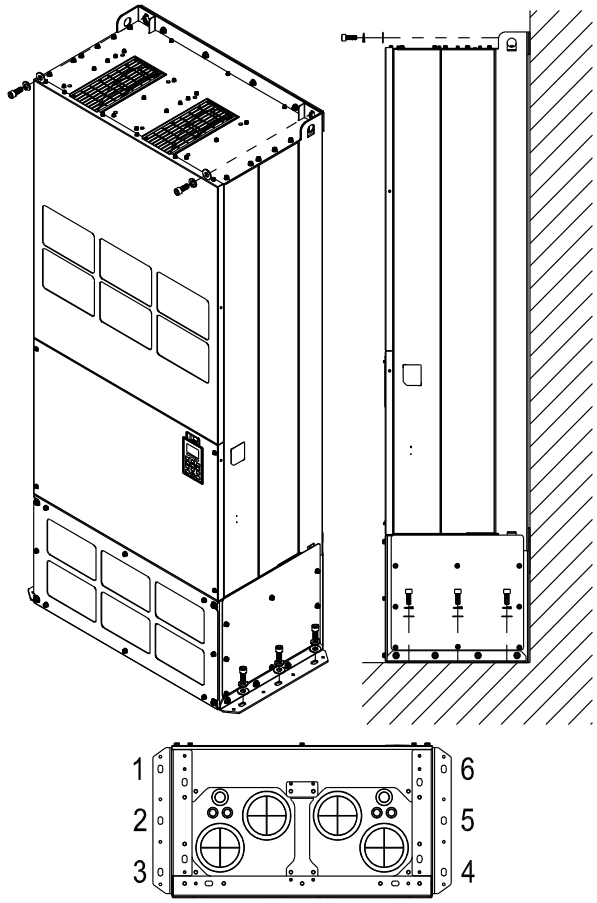

Fix the drive from the outside.

Screw: M12*8

Torque: 340–420 kg-cm / (295.1–364.6 lb-in.) / (33.3–41.2 Nm)

Figure 3-47

3-2 The Lifting Hook

The arrows indicate the location of the lifting holes of frame D0 to H, as shown in figure below:

Frame D0

Applicable models:

VFD370CH43S-00; VFD370CH43S-21; VFD370CH43L-00

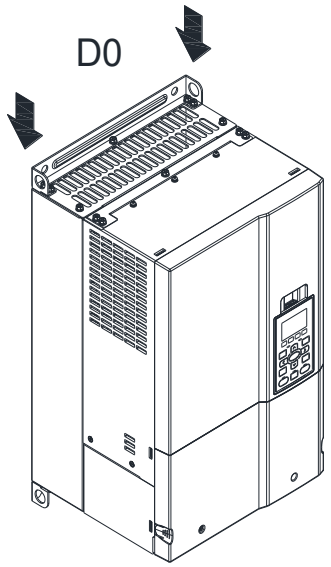

Figure 3-48

Frame D

Applicable models:
D1:
VFD220CH23A-00; VFD300CH23A-00;
VFD370CH23A-00; VFD450CH43A-00;
VFD550CH43A-00; VFD750CH43A-00

D2:
VFD220CH23A-21; VFD300CH43A-21;
VFD370CH23A-21; VFD450CH43A-21;
VFD550CH43A-21; VFD750CH43A-21

D3:
VFD450CH43L-00; VFD550CH43L-00; VFD750CH43L-00

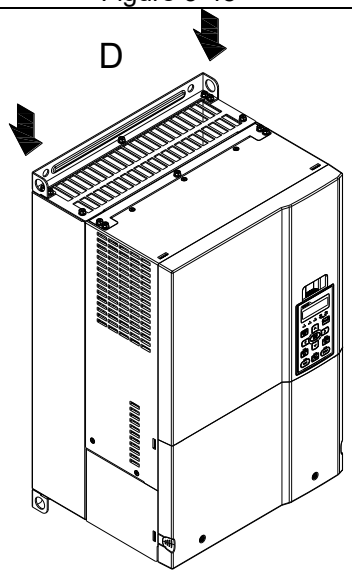

Figure 3-49

Frame E

Applicable models:

E1:
VFD450CH23A-00; VFD550CH23A-00;
VFD900CH43A-00; VFD1100CH43A-00

E2:
VFD450CH23A-21; VFD550CH23A-21;
VFD900CH43A-21; VFD1100CH43A-21

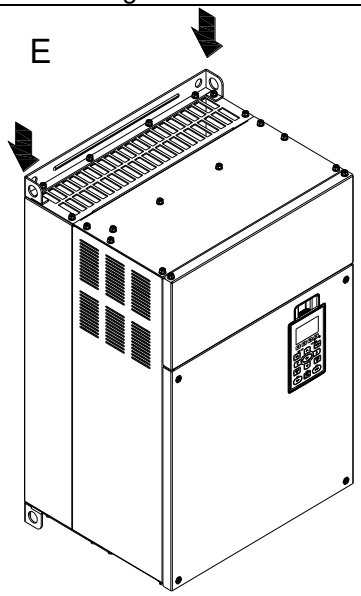

Figure 3-50

Frame F

Applicable models:

F1: VFD750CH23A-00; VF1320CH43A-00

F2: VFD750CH23A-21; VFD1320CH43A-21

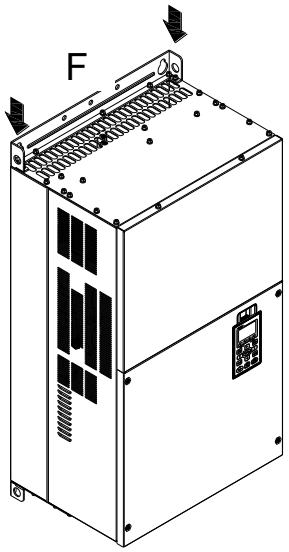

Figure 3-51

Frame G

Applicable models:

G1:
VFD1600CH43A-00; VFD1850CH43A-00;
VFD2200CH43A-00

G2:
VFD1600CH43A-21; VFD1850CH43A-21;
VFD2200CH43A-21

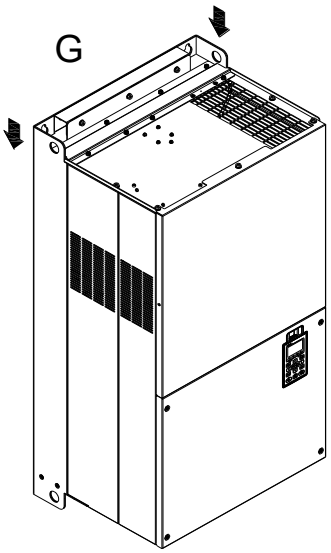

Figure 3-52

Frame H

Applicable models:

H1: VFD2800CH43A-00; VFD3150CH43A-00;
VFD3550CH43A-00; VFD4500CH43A-00

H3: VFD2800CH43C-21; VFD3150CH43C-21;
VFD3550CH43C-21; VFD4500CH43C-21

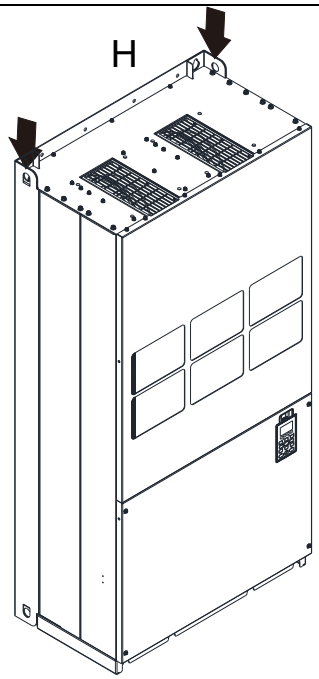

Figure 3-53

Ensure the lifting hook properly goes through the lifting hole, as shown in the following diagram.

Applicable to Frame D0–E

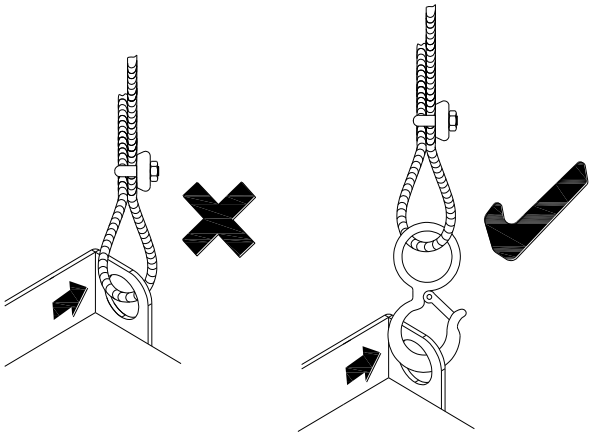

Figure 3-54

Applicable to Frame F–H

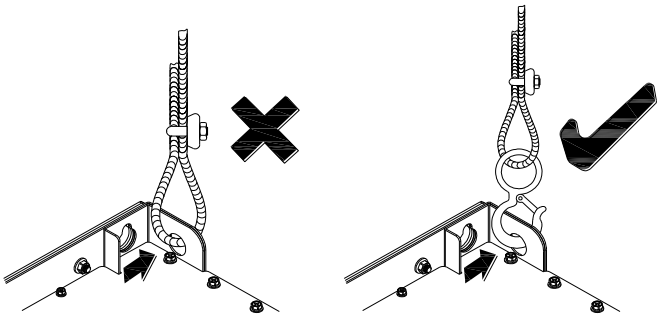

Figure 3-55

Ensure the angle between the lifting holes and the lifting device is within the specification, as shown in the following figure.

Applicable to Frame D0–E

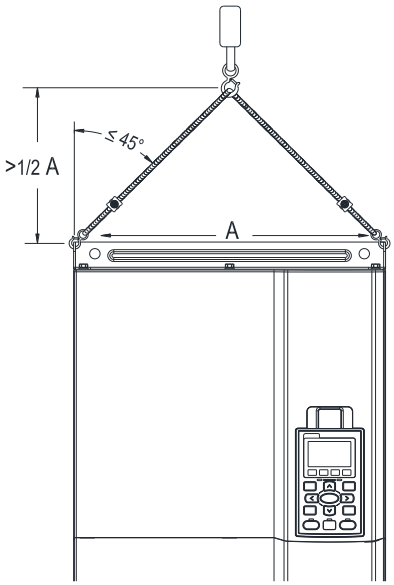

Figure 3-56

Applicable to Frame F–H
Following drawing is only for demonstration, it may be slightly different with the machine you have.

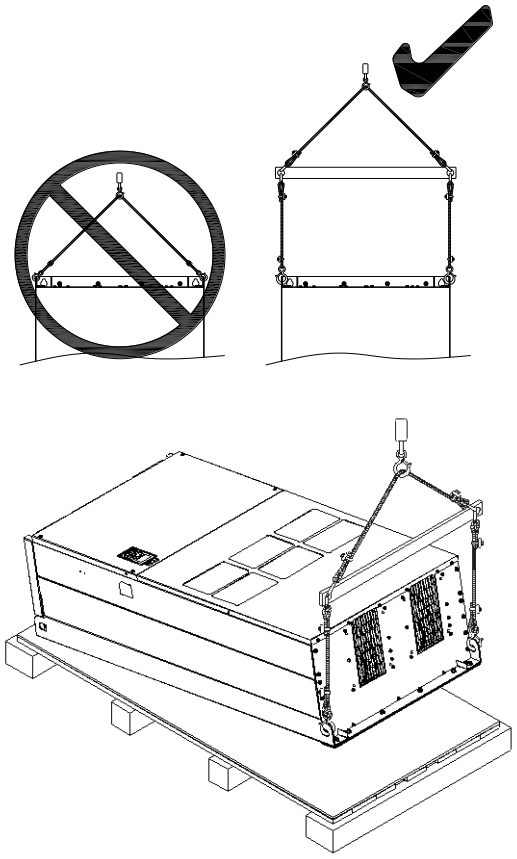

Figure 3-57

Weight

D0

VFDXXXXCH43S-00/43L-00: 27 kg / (59.5 lbs)

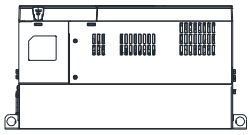

Figure 3-58

VFDXXXXCH43S-21: 29 kg / (63.9 lbs)

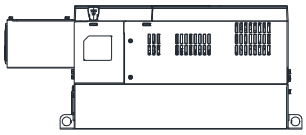

Figure 3-59

D

VFDXXXCHXXA-00/XXL-00: 37.6 kg / (82.9 lbs)

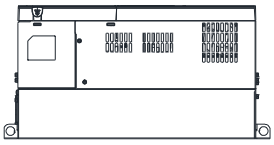

Figure 3-60

VFDXXXCHXXA-21: 40 kg / (88.2 lbs)

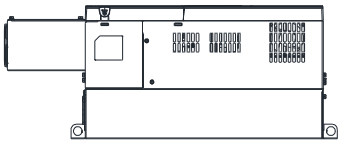

Figure 3-61

E

VFDXXXXCHXXA-00: 63.6 kg / (140.2 lbs)

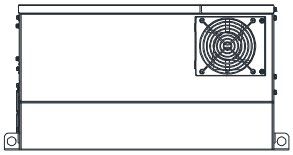

Figure 3-62

VFDXXXXCHXXA-21: 66 kg / (145.5 lbs)

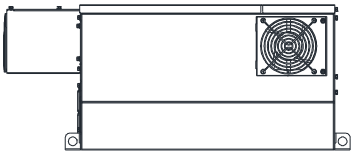

Figure 3-63

F

VFDXXXXCHXXA-00: 85 kg / (187.2 lbs)

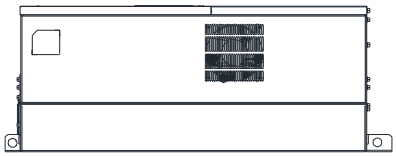

Figure 3-64

VFDXXXXCHXXA-21: 88 kg / (193.8 lbs)

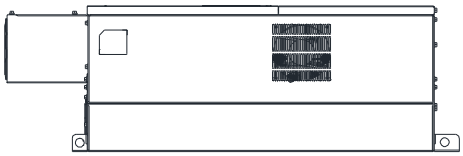

Figure 3-65

G

VFDXXXXCHXXA-00: 130 kg / (286.5 lbs)

Figure 3-66

VFDXXXXCHXXA-21: 138 kg / (303.9 lbs)

Figure 3-67

H1

VFDXXXXCH43A-00: 244 kg / (537.9 lbs)

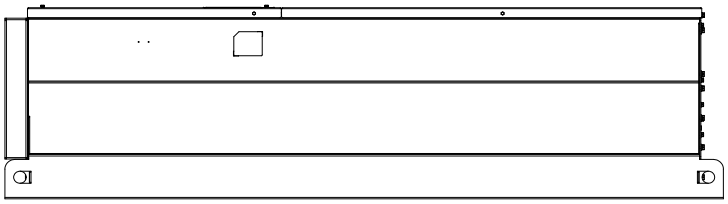

Figure 3-68

VFDXXXXCH43C-21: 269 kg / (593.0 lbs)

H3

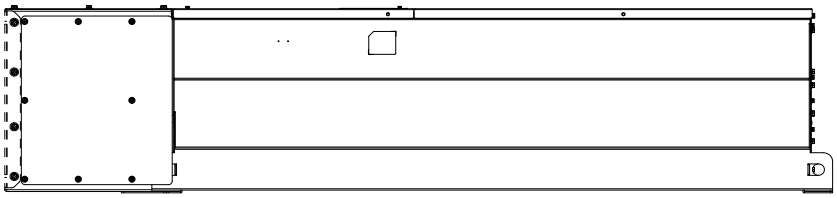

Figure 3-69

[This page intentionally left blank]

Chapter 4 Wiring

4-1 System Wiring Diagram
4-2 Wiring

After removing the front cover, verify that the power and control terminals are clearly noted. Read the following precautions before wiring.

DANGER	☑ **Turn off the AC motor drive power** before doing any wiring. A charge with hazardous voltages may remain in the DC bus capacitors even after the power has been turned off for a short time. Measure the remaining voltage with a DC voltmeter before doing any wiring. For your safety, do not start wiring before the voltage drops to a safe level (less than 25 V_{DC}). Installing wiring with a residual voltage may cause personal injury, sparks and a short circuit. ☑ Only qualified personnel familiar with AC motor drives are allowed to perform installation, wiring and commissioning. Make sure the power is turned off before wiring to prevent electric shock. ☑ Make sure that power is only applied to the R/L1, S/L2, and T/L3 terminals. Failure to comply may result in damage to the equipment. The voltage and current must be in the range indicated on the nameplate (refer to Section 1-1 Nameplate Information for details). ☑ All units must be grounded directly to a common ground terminal to prevent damage from lightning strike or electric shock and reduce noise interference. ☑ Tighten the screws of the main circuit terminals to prevent sparks caused by screws loosened due to vibration.
CAUTION	☑ For your safety, choose wires that comply with local regulations when wiring. ☑ Check the following items after finishing the wiring: 1. Are all connections correct? 2. Are there any loosen wires? 3. Are there any short circuits between the terminals or to ground?

4-1 System Wiring Diagram

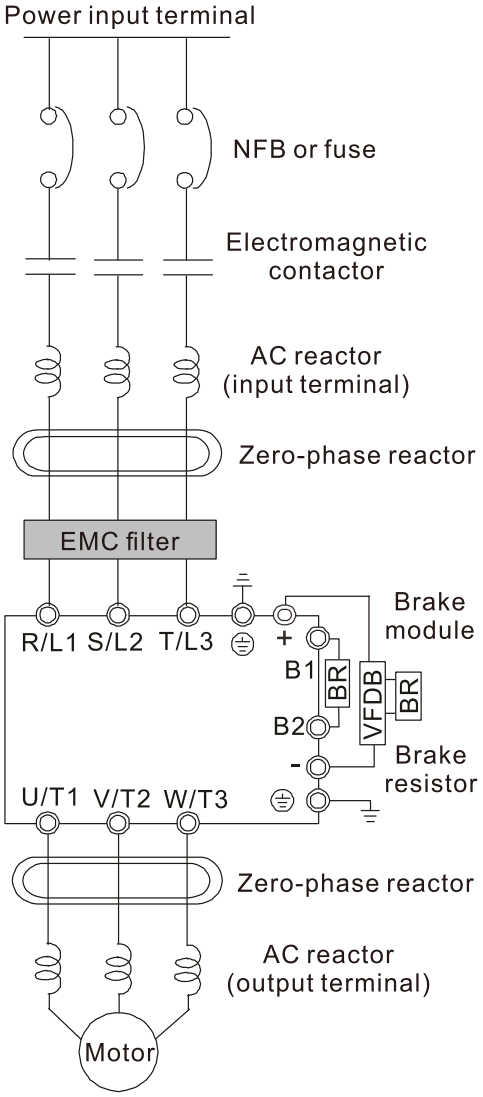

Figure 4-1

NOTE:
Refer to Section 4-2 Wiring Diagram for detailed wiring information.

Power input terminal	Supply power according to the rated power specifications indicated in the manual (refer to Chapter 9 Specification).
NFB or fuse	There may be a large inrush current during power on. Refer to Section 7-2 NFB to select a suitable NFB or Section 7-3 Fuse Specification Chart.
Electromagnetic contactor	Switching the power ON / OFF on the primary side of the electromagnetic contactor can turn the drive ON / OFF, but frequent switching can cause machine failure. Do not switch ON / OFF more than once an hour. Do not use the electromagnetic contactor as the power switch for the drive; doing so shortens the life of the drive. Refer to Section 7-2 Magnetic Contactor / Air Circuit Breaker to select the electromagnetic contactor that meets your requirement.
AC reactor (input terminal)	When the main power capacity is > 500 kVA, or when it switches into the phase capacitor, the instantaneous peak voltage and current generated may destroy the internal circuit of the drive. It is recommended that you install an input side AC reactor in the drive. This also improves the power factor and reduces power harmonics. The wiring distance should be within 10 m. Refer to Section 7-4 AC Reactor for details.
Zero phase reactor	Used to reduce radiated interference, especially in environments with audio devices, and reduce input and output side interference. The effective range is AM band to 10 MHz. Refer to Section 7-5 Zero Phase Reactor for details.
EMC filter	Can be used to reduce electromagnetic interference. Refer to Section 7-6 EMC Filter for details.
Brake module & Brake resistor (BR)	Used to shorten the deceleration time of the motor. Refer to Section 7-1 Brake Resistors and Brake Units Used in AC Motor Drives for details.
AC reactor (output terminal)	The motor cable length affects the size of the reflected wave on the motor end. It is recommended that you install an AC output reactor when the motor wiring length exceeds the value listed in Section 7-4.

4-2 Wiring

4-2-1 Wiring Diagram

Wiring Diagram for Frame A–C, D0-3 (VFD370CH43L-00)

Input: 3-phase power

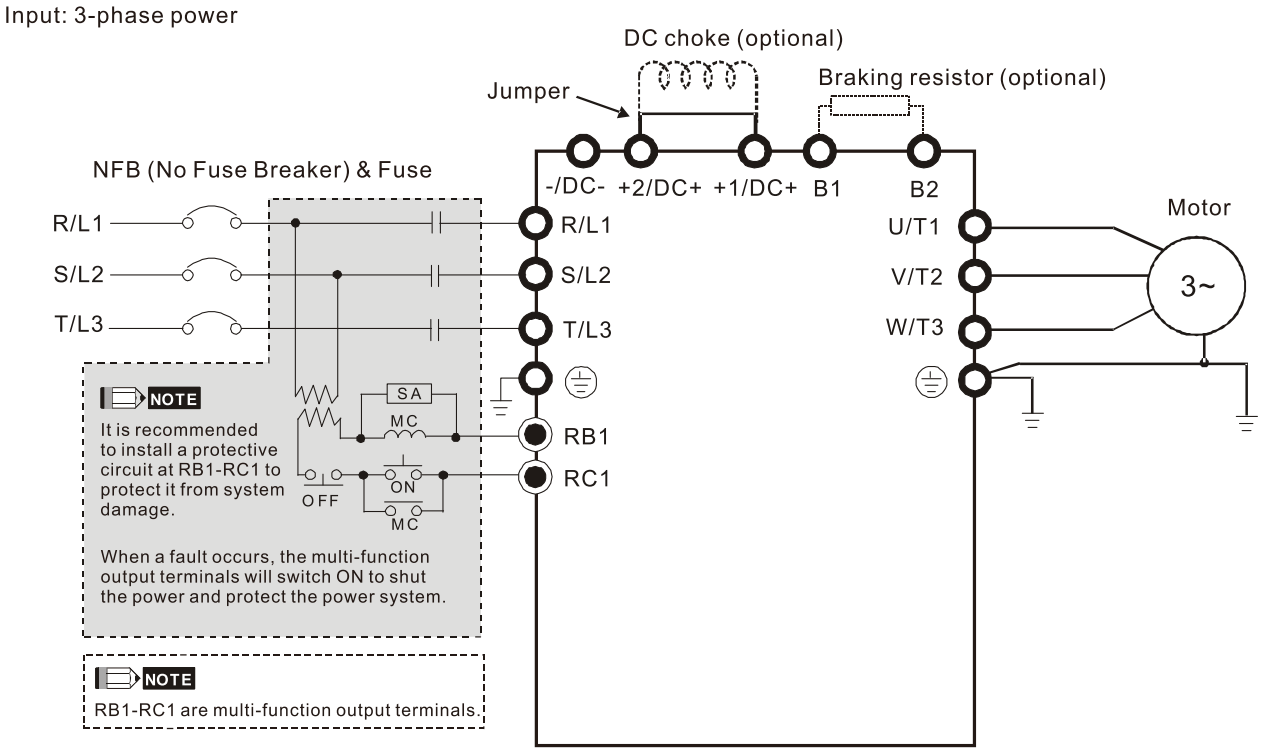

Figure 4-1

Wiring Diagram for Frame D–F

Input: 3-phase power

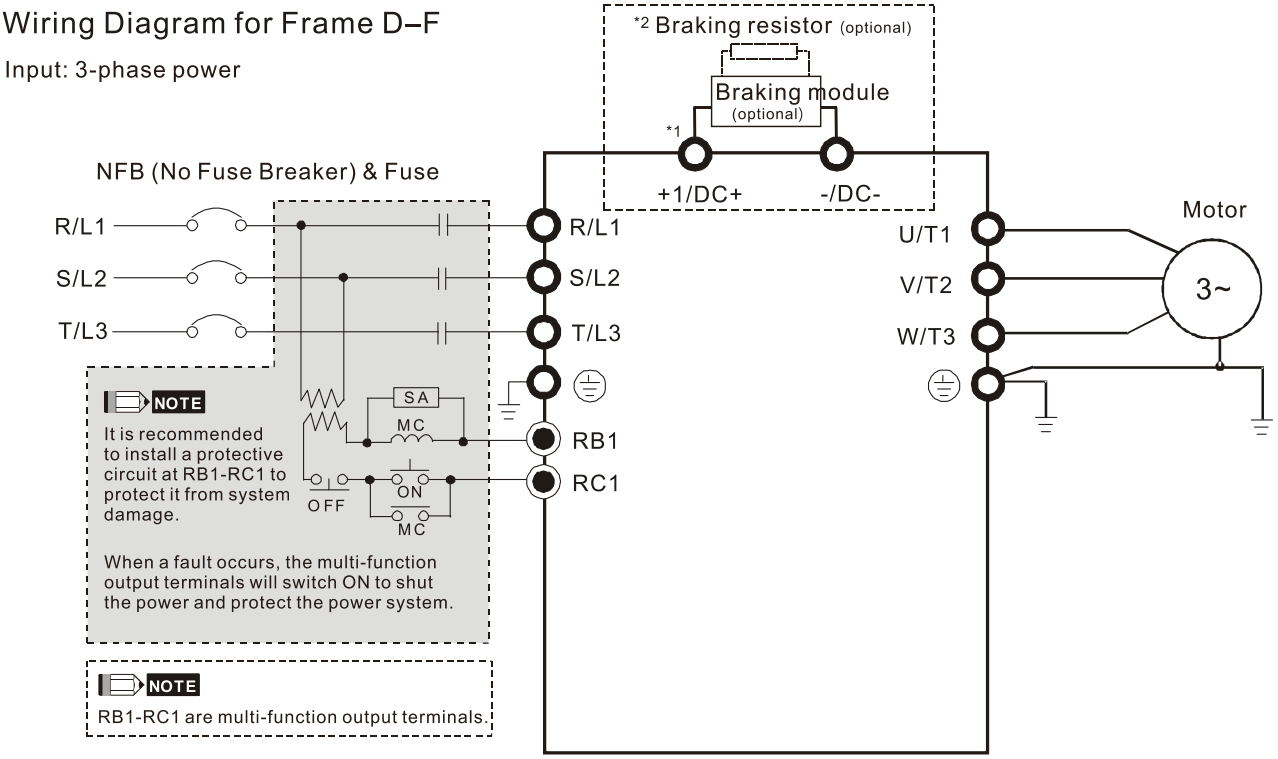

Figure 4-2

*1 Refer to Section 7-1 for brake units and resistors selection.

Wiring Diagram for Frame D3 (VFD450CH43L-00, VFD550CH43L-00, VFD750CH43L-00)

Input: 3-phase power

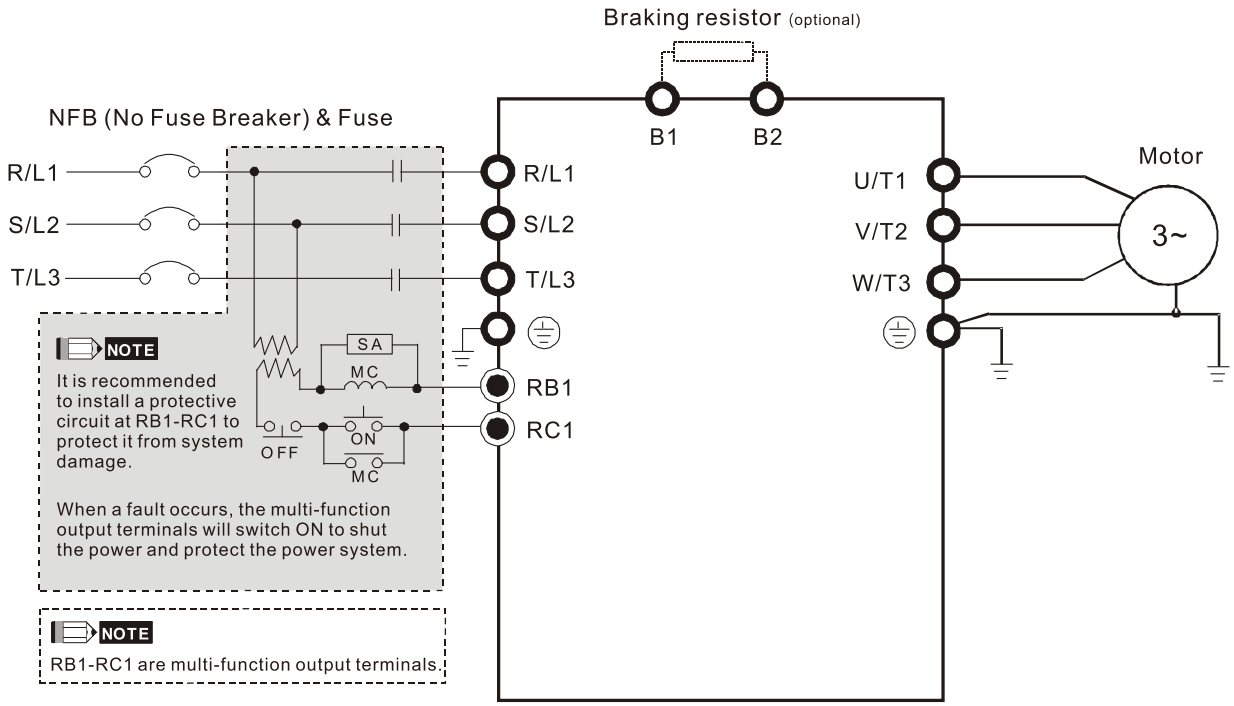

Figure 4-3

Wiring Diagram for Frame G–H

Input: 3-phase power

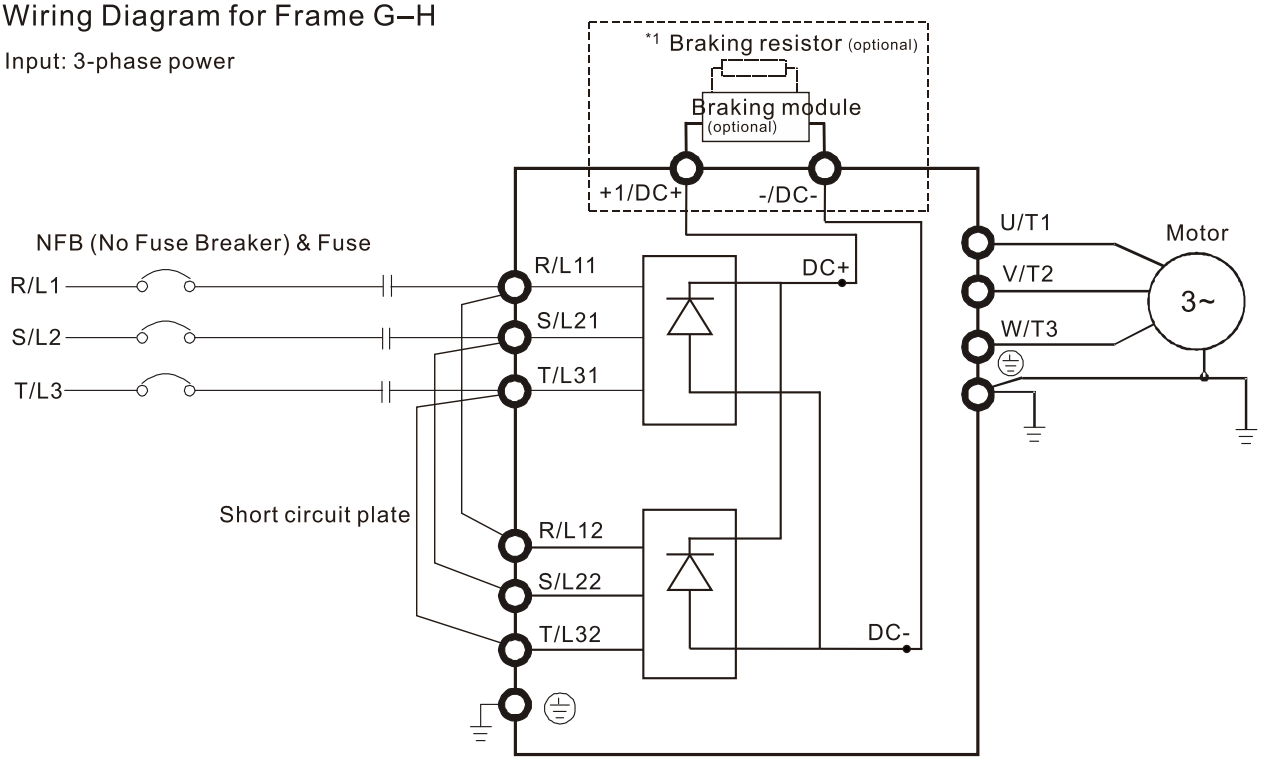

Figure 4-4

Wiring Diagram for Frame G–H

Input: 12 pulse

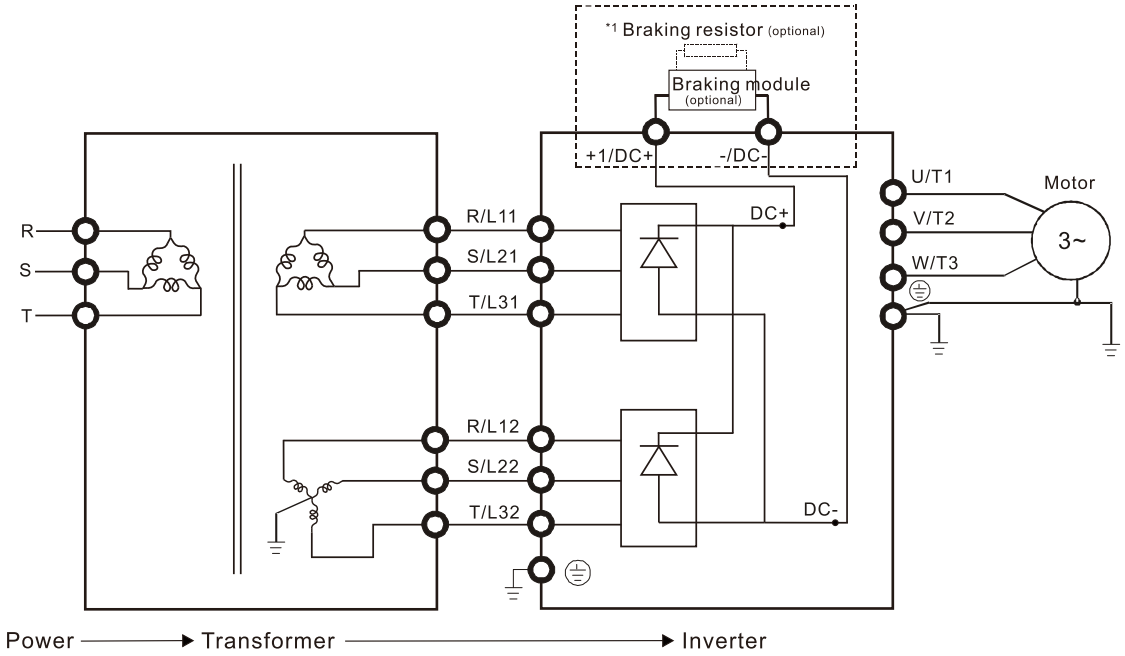

Figure 4-5

*1 Refer to Section 7-1 for brake units and resistors selection.

NOTE: When wiring for 12 Pulse Input, strictly follow above wiring diagram.

Wiring Diagram for Frame A–H

Input: 3-phase power

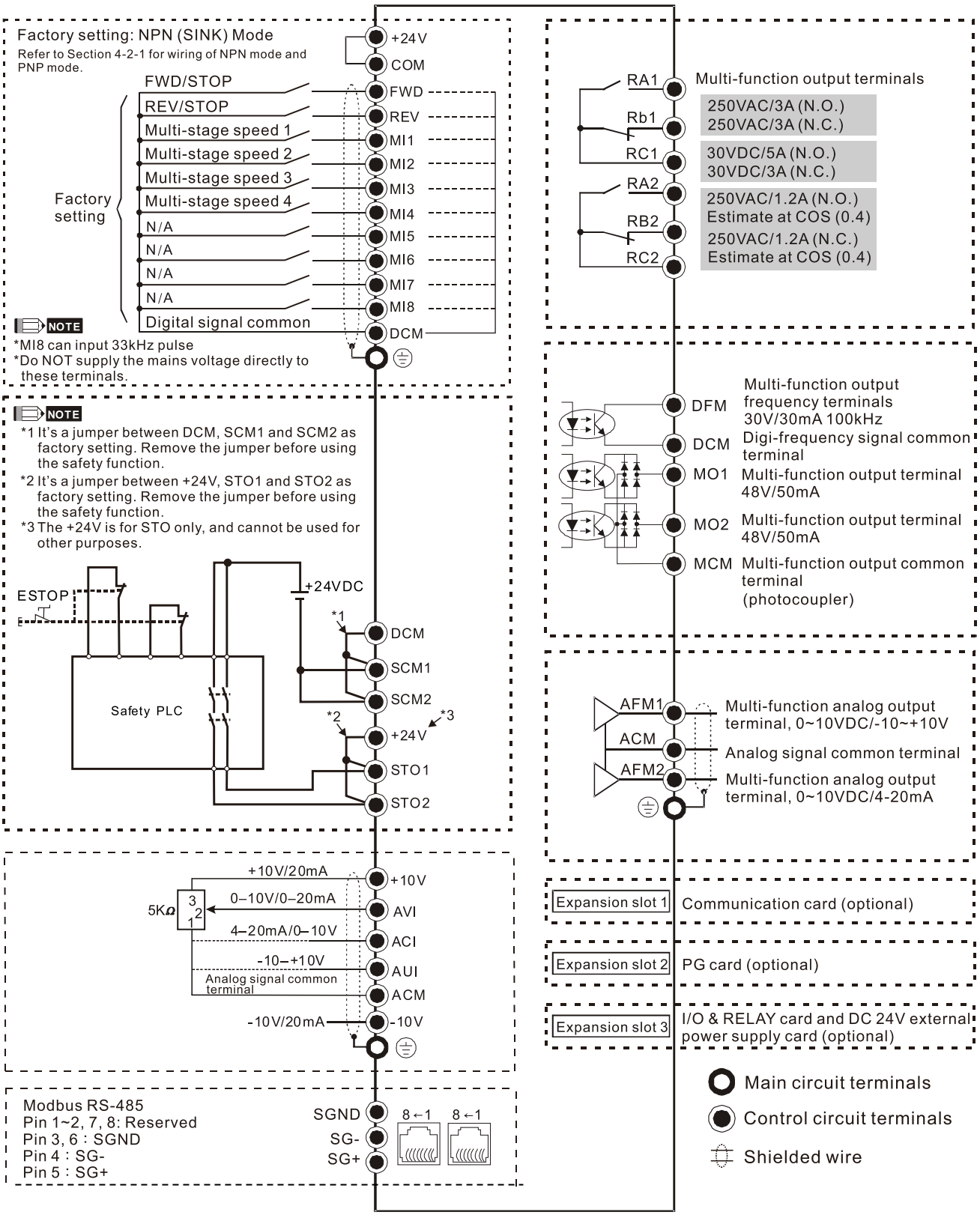

Figure 4-6

4-2-2 SINK (NPN) / SOURCE (PNP) Mode

① Sink Mode
with internal power (+24VDC)

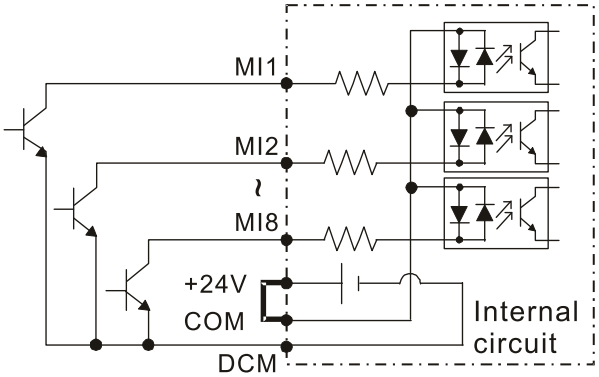

Figure 4-8

② Source Mode
with internal power (+24VDC)

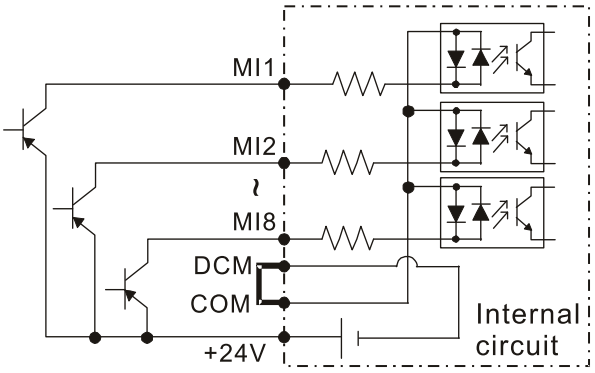

Figure 4-9

③ Sink Mode
with external power

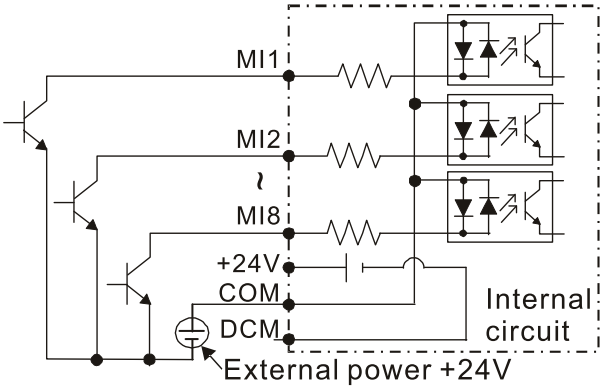

Figure 4-10

④ Source Mode
with external power

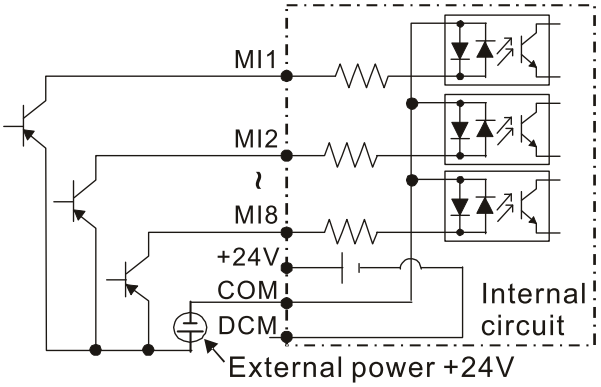

Figure 4-11

Chapter 5 Main Circuit Terminals

5-1 Main Circuit Diagram

5-2 Main Circuit Terminals

DANGER

- ☑ Fasten the screws in the main circuit terminal to prevent sparks caused by screws loosened due to vibration.
- ☑ If necessary, use an inductive filter only at the motor output terminals U/T1, V/T2, W/T3 of the AC motor drive. Do NOT use phase-compensation capacitors or L-C (Inductance-Capacitance) or R-C (Resistance-Capacitance), unless approved by Delta.
- ☑ DO NOT connect phase-compensation capacitors or surge absorbers at the output terminals of AC motor drives.
- ☑ DO NOT short circuit [+1, -], [+2, -], [+1/DC+, -/DC-] or connect brake resistor directly to any of them to prevent damage to the drive or to the brake resistors.
- ☑ Ensure proper insulation of the main circuit wiring in accordance with the relevant safety regulations.

CAUTION

Main input power terminals

- ☑ Do not connect three-phase model to single-phase power. R/L1, S/L2 and T/L3 have no phase-sequence requirement, it can be connected in any sequence.
- ☑ Add a magnetic contactor (MC) to the power input wiring to cut off power quickly and reduce malfunction when the AC motor drive protection function activates. Both ends of the MC should have an R-C surge absorber.
- ☑ Use voltage and current within the specification in Chapter 9. Refer to Chapter 9 Specifications for details.
- ☑ When using a general GFCI (Ground Fault Circuit Interrupter), select a current sensor with sensitivity of 200 mA or above and not less than 0.1-second operation time to avoid nuisance tripping.
- ☑ Use shielded wire or conduit for the power wiring and ground the two ends of the shield wire or conduit.
- ☑ Do NOT run and stop AC motor drives by turning the power ON and OFF. Run and stop AC motor drives by sending RUN and STOP command through the control terminals or the keypad. If you still need to run and stop AC motor drives by turning power ON and OFF, do so no more often than ONCE per hour.
- ☑ To comply with UL standards, connect the drive to a three-phase three-wire or three-phase four-wire Wye system of mains power system.

Output terminals for main circuit

- ☑ Use well-insulated motor, suitable for inverter operation.
- ☑ When the AC drive output terminals U/T1, V/T2, and W/T3 are connected to the motor terminals U/T1, V/T2, and W/T3 respectively, the motor will rotate counterclockwise (as viewed on the shaft end of the motor, refer to the pointed direction in the figure below) upon a forward operation command is received. To permanently reverse the direction of motor rotation, switch over any of the two motor leads.

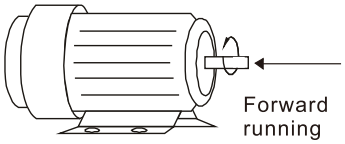

Figure 5-1

Terminals for connecting external brake resistor

☑ Install an external brake resistor for applications in frequent deceleration to stop, short deceleration time (such as high frequency operation and heavy load operation), too low braking torque, or increased braking torque.

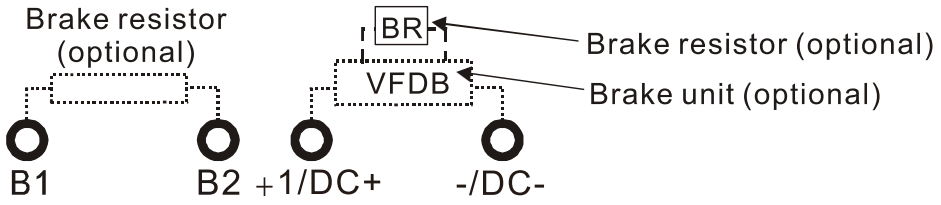

Figure 5-2

☑ DC+ and DC- are connected by common DC bus, refer to Section 5-1 (Main Circuit Terminal) for the wiring terminal specification and the wire gauge information.

☑ Refer to the VFDB manual for more information on wire gauge when installing the brake unit.

5-1 Main Circuit Diagram

Wiring Diagram for Frame A–C, D0-3 (VFD370CH43L-00)

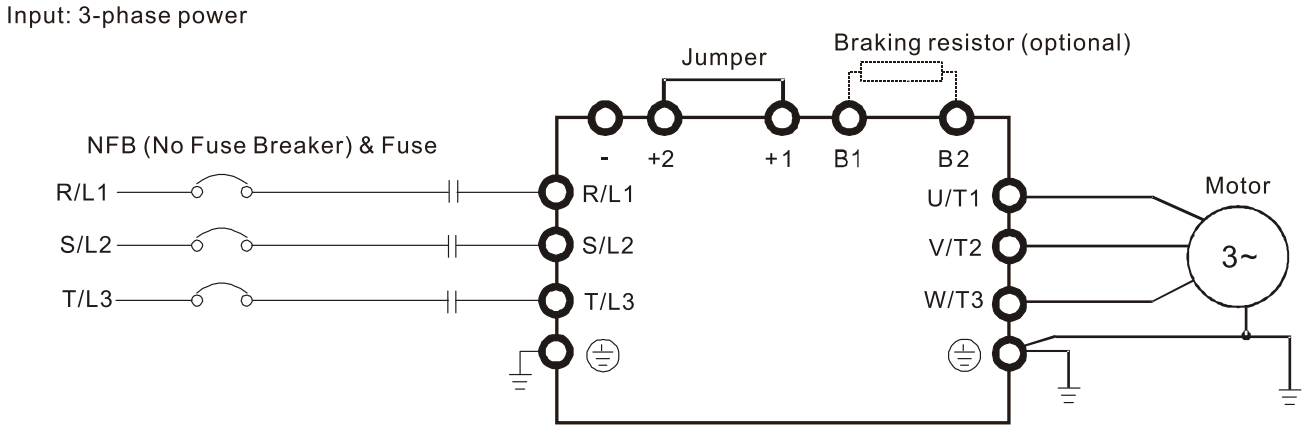

Figure 5-3

Wiring Diagram for Frame A–C, D0-3 (VFD370CH43L-00)

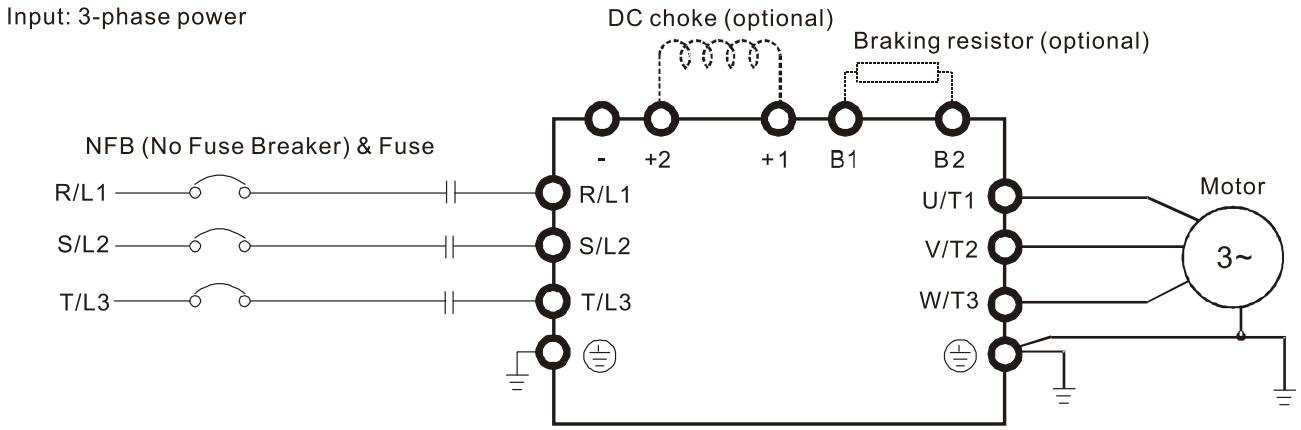

Figure 5-4

Wiring Diagram for Frame D–F

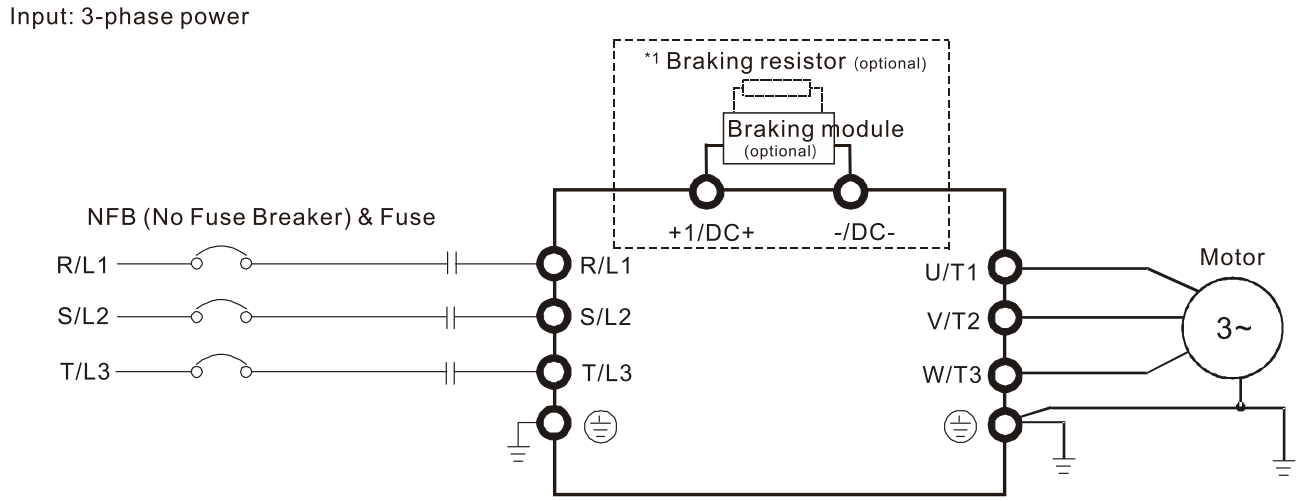

Figure 5-5

*1 Refer to Section 7-1 for brake units and resistors selection.

Wiring Diagram for Frame D3 (VFD450CH43L-00, VFD550CH43L-00, VFD750CH43L-00)

Input: 3-phase power

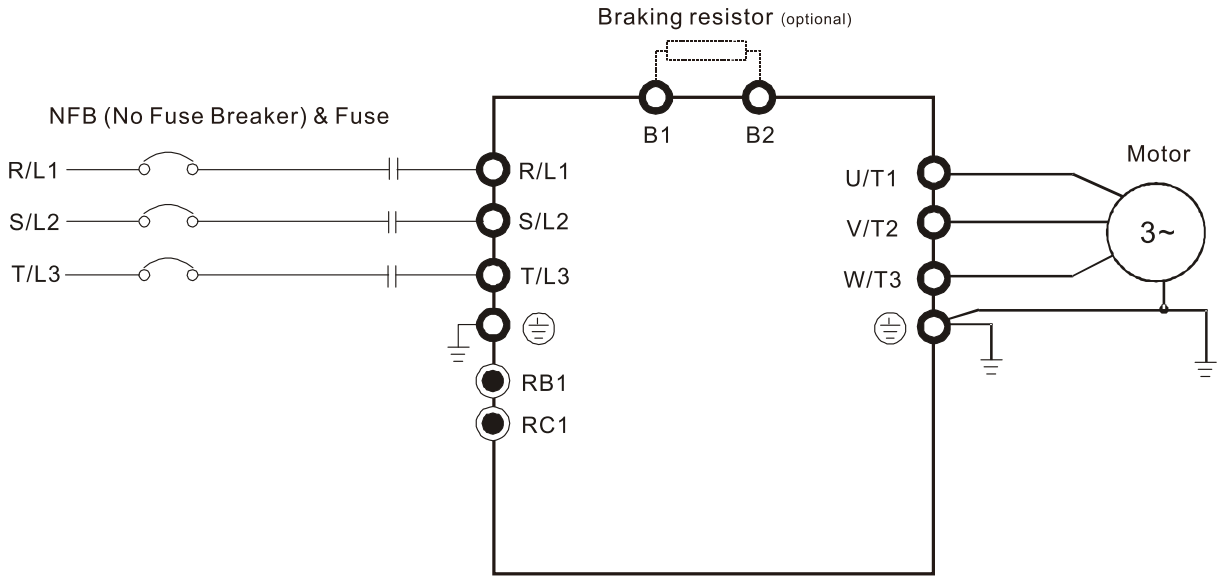

Figure 5-6

Wiring Diagram for Frame G–H

Input: 3-phase power

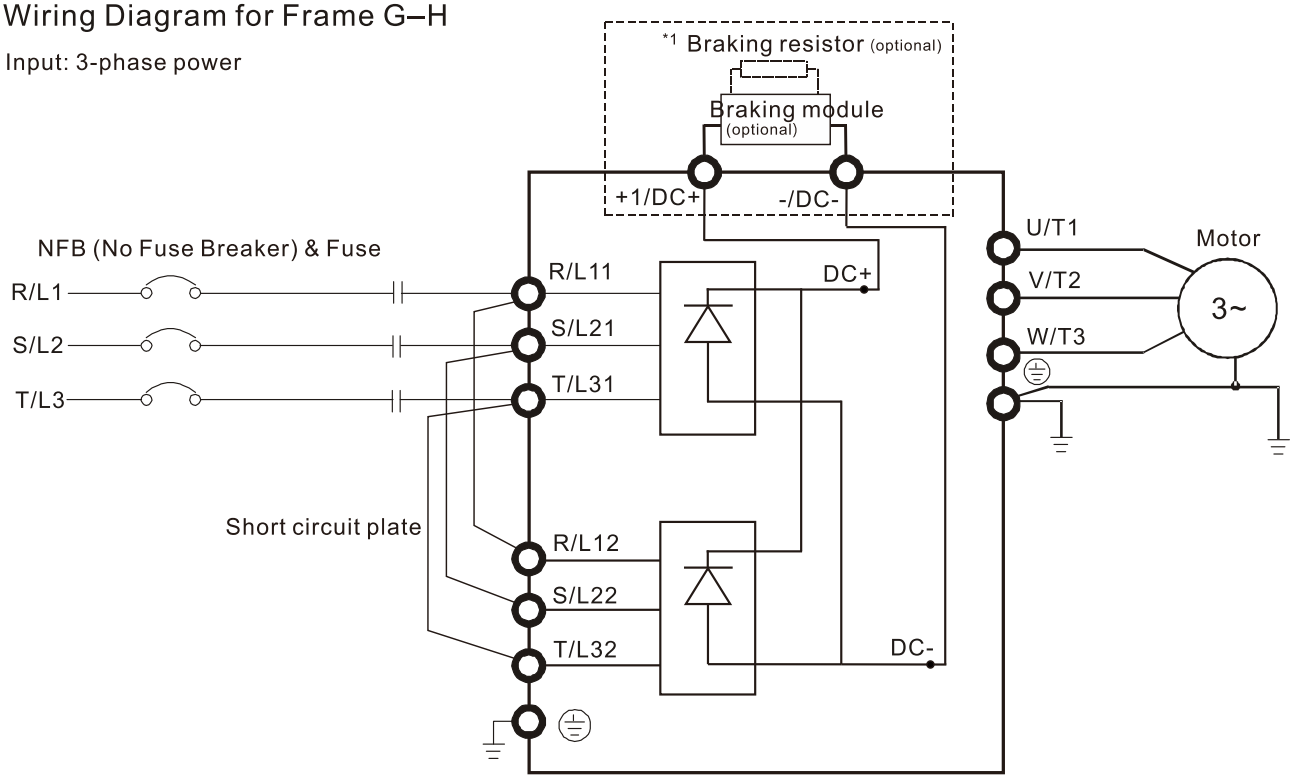

Figure 5-7

Wiring Diagram for Frame G–H

Input: 12 pulse

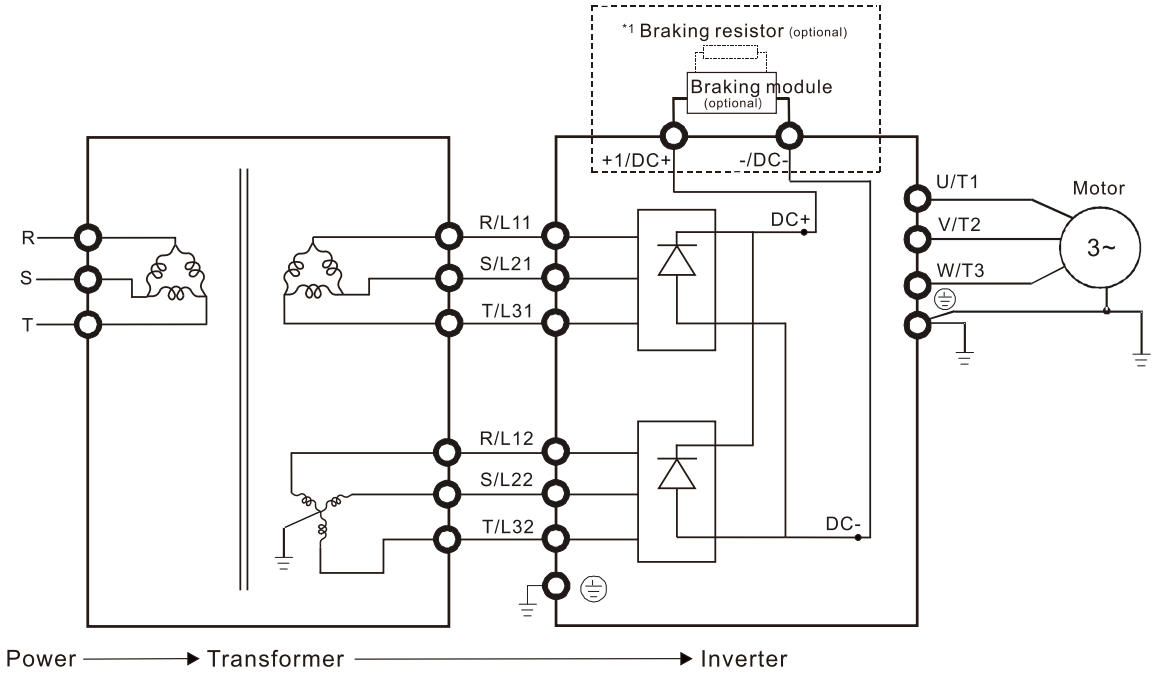

Figure 5-8

*1 Refer to Section 7-1 for brake units and resistors selection.

NOTE: When wiring for 12 Pulse Input, strictly follow above wiring diagram.

NOTE:

1. If the wiring between motor drive and motor is over 75 meters, refer to Section 7-4 Specifications of limits for motor cable length.
2. Frame G and H modes use 12 pulse input, you should remove the short circuit plate (see the figure below). Consult with Delta before using 12 pulse input.

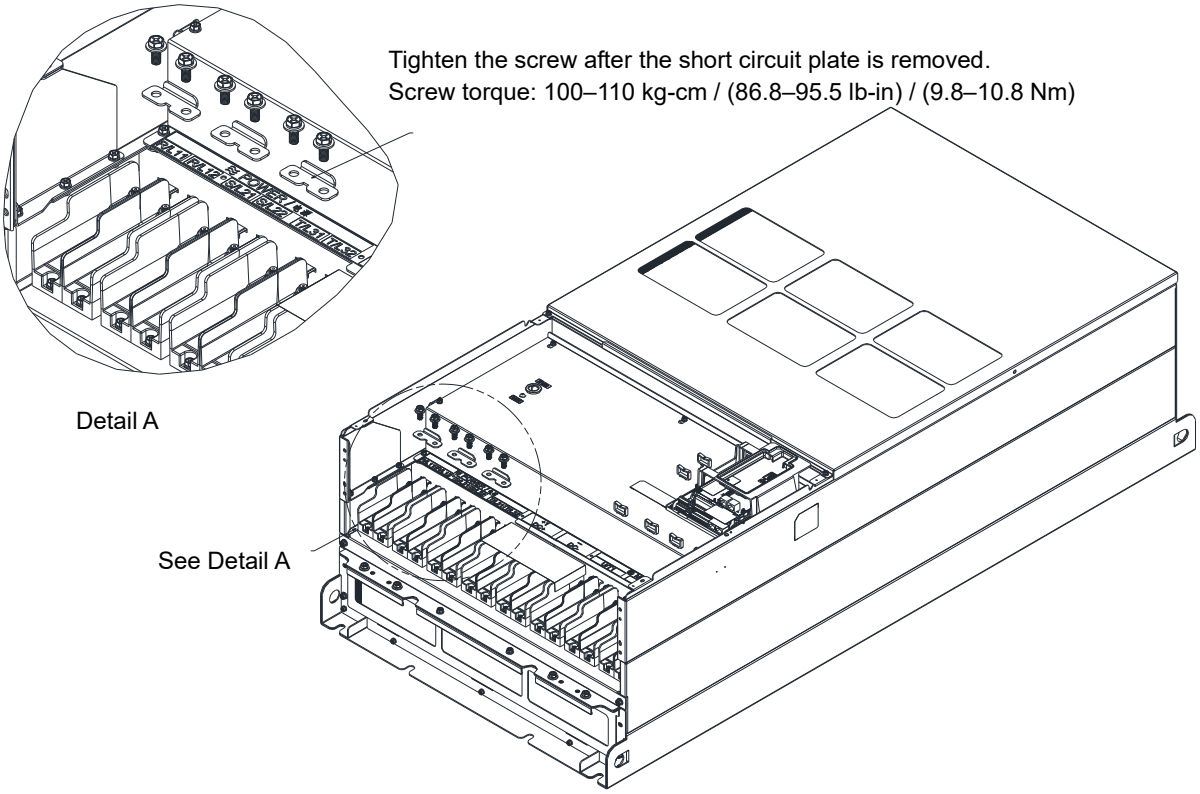

Figure 5-9

Terminals	Descriptions
R/L1, S/L2, T/L3	Mains input terminals (three-phase)
U/T1, V/T2, W/T3	AC motor drive output terminals for connecting three-phase induction motor
+1/DC+, +2/DC+	Applicable to frame A–C Connections for DC reactor to improve the power factor. Remove the jumper before installing a DC reactor.
+1/DC+, -/DC-	Connections for brake unit (VFDB series) (for 230V models: ≤ 22 kW, built-in brake module) (for 460V models: ≤ 30 kW, built-in brake module) Common DC bus
B1, B2	Connections for brake resistor (optional)
⏚	Ground connection, comply with local regulations

Table 5-1

5-2 Main Circuit Terminals

- Use the specified ring lug for main circuit terminal wiring. See Figure 5-9 and Figure 5-10 for ring lug specifications. For other types of wiring, use the wires that comply with the local regulations.
- After crimping the wire to the ring lug (must be UL approved), UL and CSA approved recognized component (YDPU2/8), install heat shrink tube rated at a minimum of 600 V_{AC} insulation over the live part. Refer to Figure 5-7.

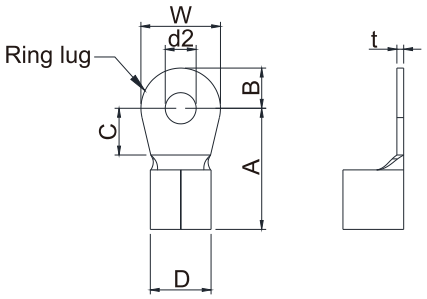

Figure 5-10

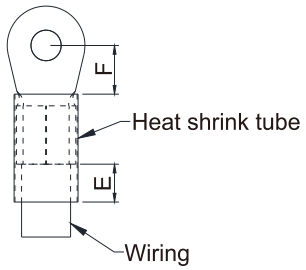

Figure 5-11

Terminal specification

The part number of the ring lugs (produced by K.S. Terminals Inc.) in the table below are for reference only. You can buy the ring lugs of your choice to match with different frame sizes.

Unit: mm

Frame	AWG	Kit P/N	A (MAX)	B (MAX)	C (MIN)	D (MAX)	d2 (MIN)	E (MIN)	F (MIN)	W (MAX)	t (MAX)
A	16	RNBL2-4	20.0	5.0	5.5	9.0	4.3	8.0	5.5	10.0	1.5
	14	RNBL2-4									
	12	RNBL5-4									
	10	RNBL5-4									
	8	RNBS8-4									
B	8	RNBM8-5	28.0	7.0	7.5	14.0	5.2	13.0	12.0	14.0	1.5
	6	RNB14-5									
	4	RNBS22-5									
C	6	RNB14-8	40.0	12.0	12.5	22.0	8.3	13.0	12.5	24.0	2.5
	4	RNB22-8									
	2	RNBS38-8									
	1/0	RNB60-8									
D0	4	RNB22-8	44.0	13.0	10.0	15.0	8.3	13.0	17.0	26.0	3.0
	2	RNBS38-8									
	1/0	SQNBS60-8	40.0	11.0	10.0	23.0	8.3	13.0	14.0*1	24.0	4.5
	2/0	SQNBS80-8									
D0 (D0-3)	6	RNBL14-6	30.0	10.0	9.5	14.0	6.2	13.0	9.5	18.5	3.0
	4	RNBS22-6									
	2	RNBS38-6									
D	4	RNB22-8	50.0	16.0	10.0	27.0	8.3	13.0	14.0	28.0	6.0
	2	RNBS38-8									
	1/0	RNB60-8									
	2/0	RNB70-8									
	3/0	RNB80-8									
	4/0	SQNBS100-8									
	250MCM	SQNBS150-8									
	300MCM	SQNBS150-8									

Frame	AWG	Kit P/N	A (MAX)	B (MAX)	C (MIN)	D (MAX)	d2 (MIN)	E (MIN)	F (MIN)	W (MAX)	t (MAX)
E	1/0	RNB60-8	53.0	16.0	17.0	26.5	8.4	13.0	17.0	31.0	5.0
	2/0	RNB70-8									
	3/0	RNB80-8									
	4/0	RNB100-8									
F	3/0	RNB80-8	55.0	15.0	10.0	27.0	8.3	13.0	17.5	31.0	6.0
	4/0	SQNBS100-8									
	300MCM	SQNBS150-8									
G	1/0	SQNBS60-8	54.0	15.5	18.0	26.5	8.2	13.0	18.0	31.0	3.5
	2/0	SQNBS80-8									
	3/0	SQNBS80-8									
	4/0	SQNBS100-8									
	250MCM	SQNBS150-8									
	300MCM	SQNBS180-12	70.0	21.0	27.0	32.7	12.2	13.0	27.0	42.0	4.0
	400MCM	SQNBS200-12									
	500MCM	SQNBS200-12									
H	3/0	SQNBS80-8	54.0	15.5	18.0	26.5	8.2	13.0	18.0	31.0	3.5
	4/0	SQNBS100-8									
	250MCM	SQNBS150-8									
	300MCM	SQNBS150-8									
	350MCM	SQNBS150-8									
	350MCM	SQNBS180-12	70.0	21.0	27.0	32.7	12.2	13.0	27.0	42.0	4.0
	500MCM	SQNBS200-12									

*1: F(MAX) = 16.5

Table 5-2

Frame A

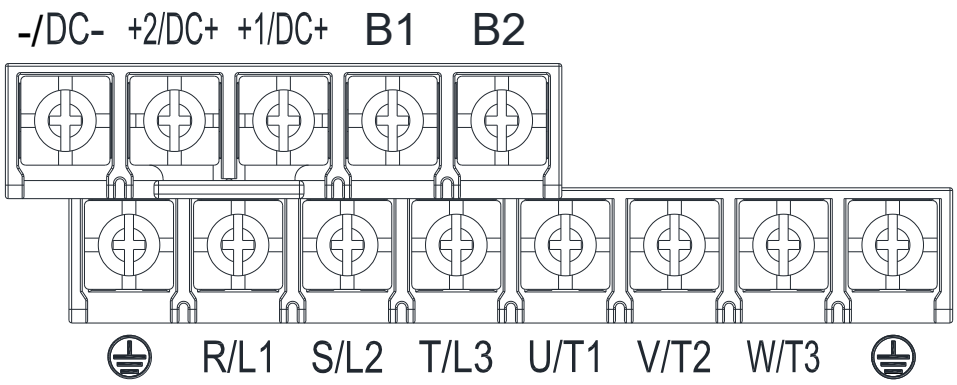

- If you install at Ta 50°C environment, use coper wires that have a voltage rating of 600V and are temperature resistance to 75°C or 90°C.
- If you install at Ta 50°C above environment, use copper wires that have a voltage rating of 600V and are temperature resistance to 90°C or above.
- To be UL installation resistance of 75°C, in accordacne with UL requirements and recommendations. Do not reduce the wire gauge when using high-temperature resistant wire.

Model	Main Circuit Terminals R/L1、S/L2、T/L3、U/T1、V/T2、W/T3、-/DC-、+1/DC+、+2/DC+、B1、B2			Terminal ⏚		
	Max. Wire Gauge	Min. Wire Gauge	Screw Spec. and Torque (±10%)	Max. Wire Gauge	Min. Wire Gauge	Screw Spec. and Torque (±10%)
VFD007CH23A-21	10 mm² (8 AWG)	2.5 mm² (14 AWG)	M4 20 kg-cm (17.4 lb-in.) (1.96 Nm)	2.5 mm² (14 AWG)	2.5 mm² (14 AWG)	M4 20 kg-cm (17.4 lb-in.) (1.96 Nm)
VFD015CH23A-21		4.0 mm² (12 AWG)		4.0 mm² (12 AWG)	4.0 mm² (12 AWG)	
VFD022CH23A-21		6.0 mm² (10 AWG)		6.0 mm² (10 AWG)	6.0 mm² (10 AWG)	
VFD037CH23A-21		10.0 mm² (8 AWG)		10.0 mm² (8 AWG)	10.0 mm² (8 AWG)	
VFD007CH43A-21		1.5 mm² (16 AWG)		2.5 mm² (14 AWG)	2.5 mm² (14 AWG)	
VFD015CH43A-21		1.5 mm² (16 AWG)		2.5 mm² (14 AWG)	2.5 mm² (14 AWG)	
VFD022CH43A-21		2.5 mm² (14 AWG)		2.5 mm² (14 AWG)	2.5 mm² (14 AWG)	
VFD037CH43A-21		6.0 mm² (10 AWG)		6.0 mm² (10 AWG)	6.0 mm² (10 AWG)	
VFD055CH43A-21		6.0 mm² (10 AWG)		6.0 mm² (10 AWG)	6.0 mm² (10 AWG)	
VFD007CH4EA-21		1.5 mm² (16 AWG)		2.5 mm² (14 AWG)	2.5 mm² (14 AWG)	
VFD015CH4EA-21		1.5 mm² (16 AWG)		2.5 mm² (14 AWG)	2.5 mm² (14 AWG)	
VFD022CH4EA-21		2.5 mm² (14 AWG)		2.5 mm² (14 AWG)	2.5 mm² (14 AWG)	
VFD037CH4EA-21		6.0 mm² (10 AWG)		6.0 mm² (10 AWG)	6.0 mm² (10 AWG)	
VFD055CH4EA-21		6.0 mm² (10 AWG)		6.0 mm² (10 AWG)	6.0 mm² (10 AWG)	

Frame B

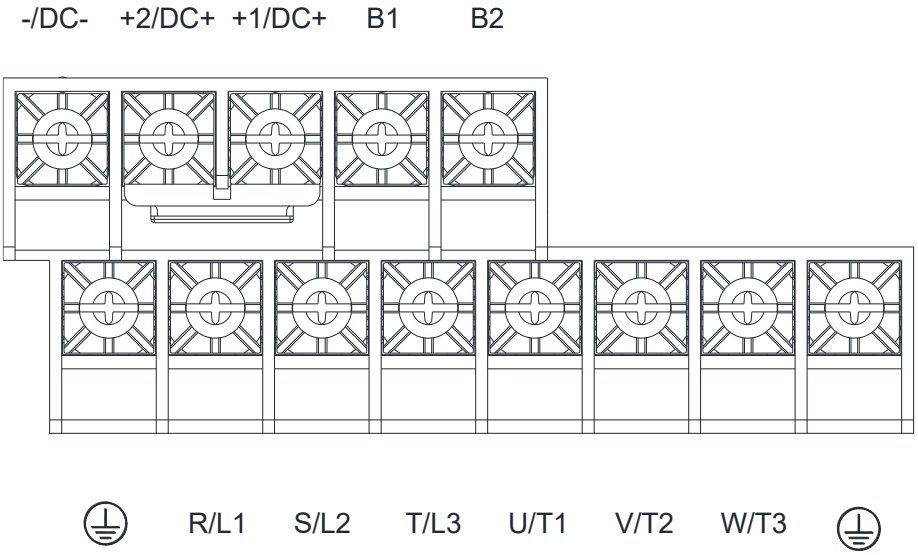

- If you install at Ta 50°C environment, use coper wires that have a voltage rating of 600V and are temperature resistance to 75°C or 90°C.
- If you install at Ta 50°C above environment, use copper wires that have a voltage rating of 600V and are temperature resistance to 90°C or above.
- For VFD110CH23A-21 models: if you install at Ta 45°C above environment, use copper wires that have a voltage rating of 600V and are temperature resistance to 90°C or above.
- To be UL installation compliant, you must use copper wires when installing. The wire gauge is based on temperature resistance of 75°C, in accordance with UL requirements and recommendations. Do not reduce the wire gauge when using high-temperature resistant wire.
- +2/DC+, +1/DC+: with 45 kg-cm / (39.0 lb-in) / (4.42 Nm) (±10%) torque

Model	Main Circuit Terminals R/L1、S/L2、T/L3、U/T1、V/T2、W/T3、-/DC-、+1/DC+、+2/DC+、B1、B2			Terminal ⏚		
	Max. Wire Gauge	Min. Wire Gauge	Screw Spec. and Torque (±10%)	Max. Wire Gauge	Min. Wire Gauge	Screw Spec. and Torque (±10%)
VFD055CH23A-21	35 mm^2 (3 AWG)	10 mm^2 (8 AWG)	M5 35 kg-cm (30.4 lb-in.) (3.43 Nm)	10 mm^2 (8 AWG)	10 mm^2 (8 AWG)	M5 35 kg-cm (30.4 lb-in.) (3.43 Nm)
VFD075CH23A-21		16 mm^2 (6 AWG)		16 mm^2 (6 AWG)	16 mm^2 (6 AWG)	
VFD110CH23A-21		35 mm^2 (3 AWG)		35 mm^2 (3 AWG)	16 mm^2 (6 AWG)	
VFD075CH43A-21		10 mm^2 (8 AWG)		10 mm^2 (8 AWG)	10 mm^2 (8 AWG)	
VFD075CH4EA-21		10 mm^2 (8 AWG)		10 mm^2 (8 AWG)	10 mm^2 (8 AWG)	
VFD110CH43A-21		10 mm^2 (8 AWG)		10 mm^2 (8 AWG)	10 mm^2 (8 AWG)	
VFD110CH4EA-21		10 mm^2 (8 AWG)		10 mm^2 (8 AWG)	10 mm^2 (8 AWG)	
VFD150CH43A-21		16 mm^2 (6 AWG)		16 mm^2 (6 AWG)	16 mm^2 (6 AWG)	
VFD150CH4EA-21		16 mm^2 (6 AWG)		16 mm^2 (6 AWG)	16 mm^2 (6 AWG)	

Frame C

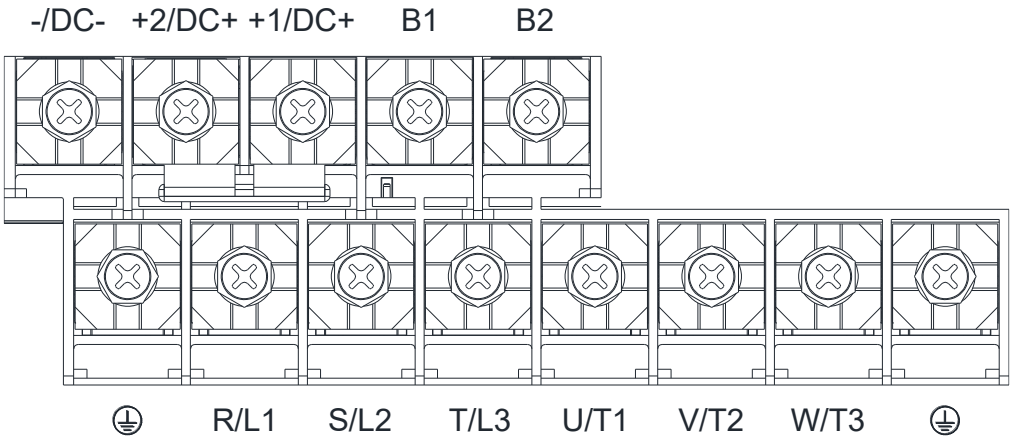

- If you install at Ta 50°C environment, use coper wires that have a voltage rating of 600V and are temperature resistance to 75°C or 90°C.
- If you install at Ta 50°C above environment, use copper wires that have a voltage rating of 600V and are temperature resistance to 90°C or above.
- For VFD220CH23A-21 models: if you install at Ta 40°C above environment, use copper wires that have a voltage rating of 600 V and are temperature resistance to 90°C or above.
- To be UL installation compliant, you must use copper wires when installing. The wire gauge is based on temperature resistance of 75°C, in accordance with UL requirements and recommendations. Do not reduce the wire gauge when using high-temperature resistant wire.
- +2/DC+, +1/DC+: with 90 kg-cm / (78.2 lb-in) / (8.83 Nm) (±10%) torque

Model	Main Circuit Terminals R/L1、S/L2、T/L3、U/T1、V/T2、W/T3、-/DC-、+1/DC+、+2/DC+、B1、B2			Terminal ⏚		
	Max. Wire Gauge	Min. Wire Gauge	Screw Spec. and Torque (±10%)	Max. Wire Gauge	Min. Wire Gauge	Screw Spec. and Torque (±10%)
VFD150CH23A-21	50 mm² (1/0 AWG)	50 mm² (1 AWG)	M8 80 kg-cm (69.4 lb-in.) (7.84 Nm)	50 mm² (1 AWG)	25 mm² (4 AWG)	M8 80 kg-cm (69.4 lb-in.) (7.84 Nm)
VFD185CH23A-21		50 mm² (1/0 AWG)		50 mm² (1/0 AWG)	25 mm² (4 AWG)	
VFD185CH43A-21		25 mm² (4 AWG)		25 mm² (4 AWG)	16 mm² (6 AWG)	
VFD220CH43A-21		25 mm² (4 AWG)		25 mm² (4 AWG)	16 mm² (6 AWG)	
VFD300CH43A-21		35 mm² (2 AWG)		35 mm² (2 AWG)	16 mm² (6 AWG)	
VFD185CH4EA-21		25 mm² (4 AWG)		25 mm² (4 AWG)	16 mm² (6 AWG)	
VFD220CH4EA-21		25 mm² (4 AWG)		25 mm² (4 AWG)	16 mm² (6 AWG)	
VFD300CH4EA-21		35 mm² (2 AWG)		35 mm² (2 AWG)	16 mm² (6 AWG)	

Frame D0-1 / D0-2

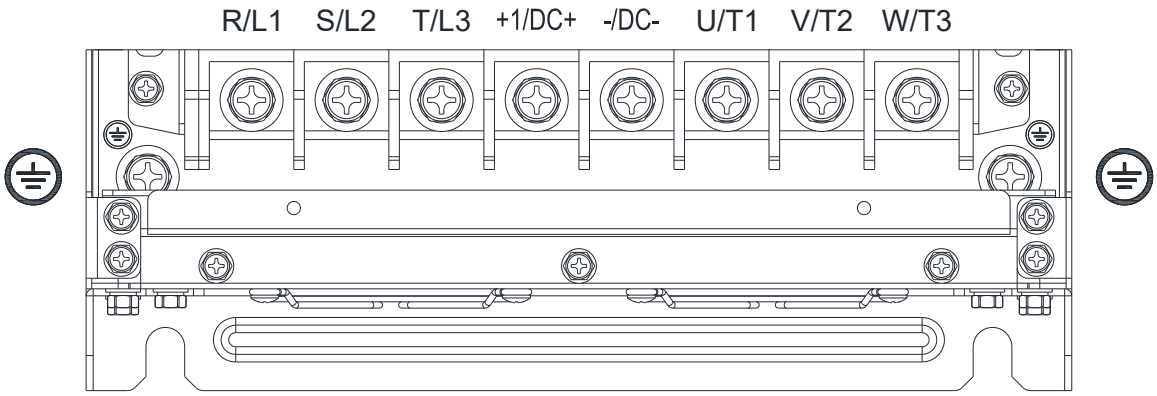

- If you install at Ta 50°C (for model names with last digit -00) / 40°C (for model names with last digit -21) environment, use copper wires have a voltage rating of 600V and are temperature resistance to 75°C or 90°C.
- If you install at Ta 50°C (for model names with last digit -00) / 40°C (for model names with last digit -21) above environment, use copper wires have a voltage rating of 600°C and are temperature resistance to 90°C or above.
- To be UL installation compliant, you must use copper wires when installing. The wire gauge is based on temperature resistance of 75°C, in accordance with UL requirements and recommendations. Do not reduce the wire gauge when using high-temperature resistant wire.

Model	Main Circuit Terminals R/L1、S/L2、T/L3、U/T1、V/T2、W/T3、-/DC-、+1/DC+			Terminal ⏚		
	Max. Wire Gauge	Min. Wire Gauge	Screw Spec. and Torque (±10%)	Max. Wire Gauge	Min. Wire Gauge	Screw Spec. and Torque (±10%)
VFD370CH43S-00	50 mm² (1/0 AWG)	50 mm² (1/0 AWG)	M8 80 kg-cm (69.4 lb-in.) (7.84 Nm)	25 mm² (4 AWG)	25 mm² (4 AWG)	M8 80 kg-cm (69.4 lb-in.) (7.84 Nm)
VFD370CH43S-21		50 mm² (1/0 AWG)		25 mm² (4 AWG)	25 mm² (4 AWG)	

Frame D0-3

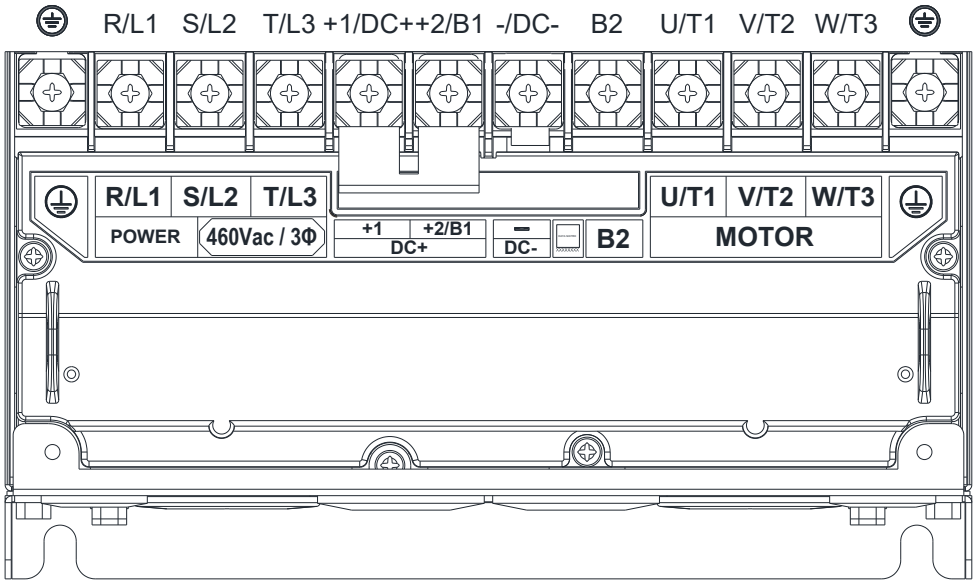

- If you install at Ta 45°C environment, use copper wires have a voltage rating of 600V and are temperature resistance to 75°C or 90°C.
- If you install at Ta 45°C above environment, use copper wires have a voltage rating of 600°C and are temperature resistance to 90°C or above.
- To be UL installation compliant, you must use copper wires when installing. The wire gauge is based on temperature resistance of 75°C, in accordance with UL requirements and recommendations. Do not reduce the wire gauge when using high-temperature resistant wire.

Model	Main Circuit Terminals R/L1、S/L2、T/L3、U/T1、V/T2、W/T3、-/DC-、+1/DC+			Terminal ⏚		
	Max. Wire Gauge	Min. Wire Gauge	Screw Spec. and Torque (±10%)	Max. Wire Gauge	Min. Wire Gauge	Screw Spec. and Torque (±10%)
VFD370CH43L-00	35 mm^2 (2 AWG)	35 mm^2 (2 AWG)	M6 50 kg-cm (43.4 lb-in.) (4.9 Nm)	35 mm^2 (2 AWG)	16 mm^2 (6 AWG)	M6 50 kg-cm (43.4 lb-in.) (4.9 Nm)

Frame D1 / D2

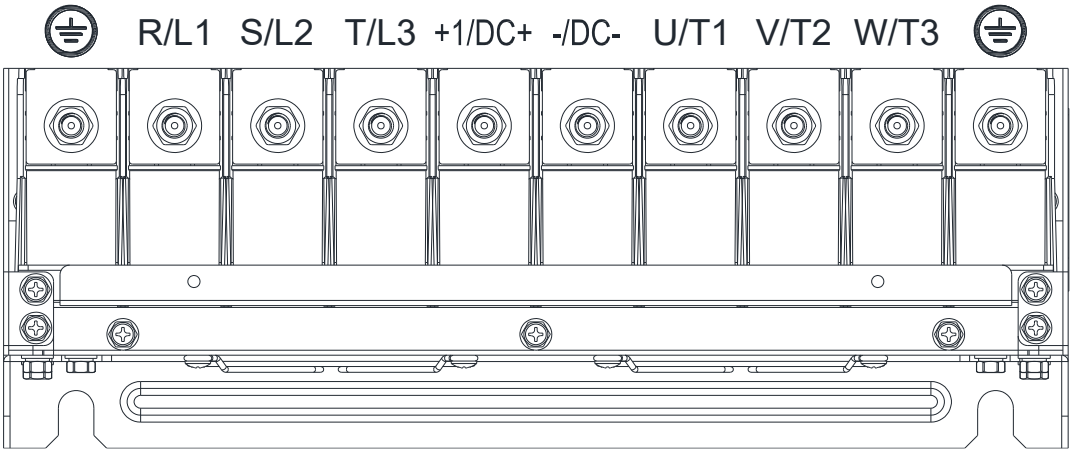

- If you install at Ta 50°C (for model names with last digit -00) / 40°C (for model names with last digit -21) environment, use copper wires have a voltage rating of 600V and are temperature resistance to 75°C or 90°C.
- If you install at Ta 50°C (for model names with last digit -00) / 40°C (for model names with last digit -21) above environment, use copper wires have a voltage rating of 600°C and are temperature resistance to 90°C or above.
- To be UL installation compliant, you must use copper wires when installing. The wire gauge is based on temperature resistance of 75°C, in accordance with UL requirements and recommendations. Do not reduce the wire gauge when using high-temperature resistant wire.

Model	Main Circuit Terminals R/L1、S/L2、T/L3、U/T1、V/T2、W/T3、-/DC-、+1/DC+			Terminal ⏚		
	Max. Wire Gauge	Min. Wire Gauge	Screw Spec. and Torque (±10%)	Max. Wire Gauge	Min. Wire Gauge	Screw Spec. and Torque (±10%)
VFD220CH23A-00	150 mm² (300 MCM)	70 mm² (2/0 AWG)	M8 180 kg-cm (156.2 lb-in.) (17.65 Nm)	70 mm² (2/0 AWG)	35 mm² (2 AWG)	M8 180 kg-cm (156.2 lb-in.) (17.65 Nm)
VFD300CH23A-00		120 mm² (4/0 AWG)		120 mm² (4/0 AWG)	70 mm² (2/0 AWG)	
VFD370CH23A-00		120 mm² (250 MCM)		120 mm² (250 MCM)	70 mm² (2/0 AWG)	
VFD450CH43A-00		70 mm² (2/0 AWG)		70 mm² (2/0 AWG)	35 mm² (2 AWG)	
VFD550CH43A-00		95 mm² (3/0 AWG)		95 mm² (3/0 AWG)	50 mm² (1/0 AWG)	
VFD750CH43A-00		150 mm² (300 MCM)		150 mm² (300 MCM)	95 mm² (3/0 AWG)	
VFD220CH23A-21	120 mm² (4/0 AWG)	50 mm² (1/0 AWG)		50 mm² (1/0 AWG)	25 mm² (4 AWG)	
VFD300CH23A-21		95 mm² (3/0 AWG)		95 mm² (3/0 AWG)	50 mm² (1/0 AWG)	
VFD370CH23A-21		120 mm² (4/0 AWG)		120 mm² (4/0 AWG)	70 mm² (2/0 AWG)	
VFD450CH43A-21		50 mm² (1/0 AWG)		50 mm² (1/0 AWG)	25 mm² (4 AWG)	
VFD550CH43A-21		70 mm² (2/0 AWG)		70 mm² (2/0 AWG)	35 mm² (2 AWG)	
VFD750CH43A-21		120 mm² (4/0 AWG)		120 mm² (4/0 AWG)	70 mm² (2/0 AWG)	

Frame D3

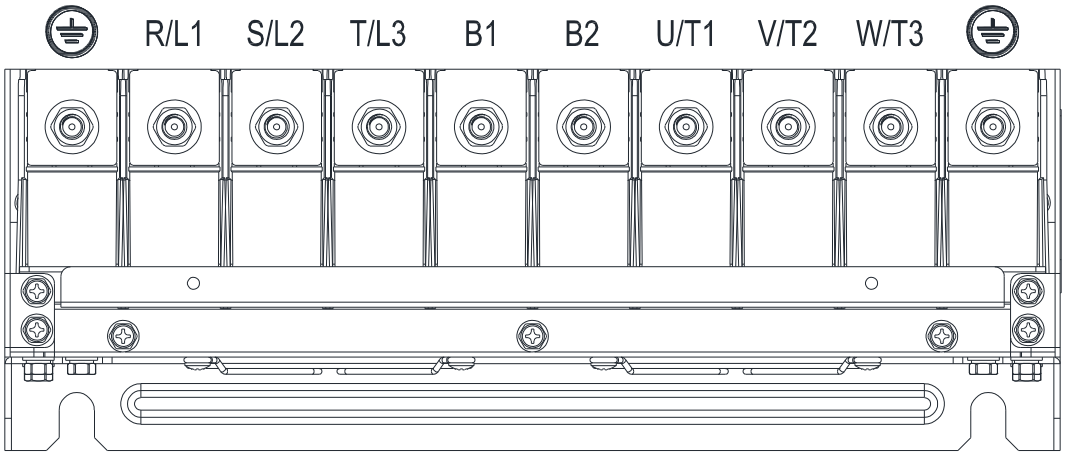

- If you install at Ta 45°C environment, use copper wires have a voltage rating of 600V and are temperature resistance to 75°C or 90°C.
- If you install at Ta 45°C above environment, use copper wires have a voltage rating of 600°C and are temperature resistance to 90°C or above.
- To be UL installation compliant, you must use copper wires when installing. The wire gauge is based on temperature resistance of 75°C, in accordance with UL requirements and recommendations. Do not reduce the wire gauge when using high-temperature resistant wire.

Model	Main Circuit Terminals R/L1、S/L2、T/L3、U/T1、V/T2、W/T3、-/DC-、+1/DC+			Terminal ⏚		
	Max. Wire Gauge	Min. Wire Gauge	Screw Spec. and Torque (±10%)	Max. Wire Gauge	Min. Wire Gauge	Screw Spec. and Torque (±10%)
VFD450CH43L-00	120 mm² (4/0 AWG)	50 mm² (1/0 AWG)	M8 180 kg-cm (156.2 lb-in.) (17.65 Nm)	50 mm² (1/0 AWG)	25 mm² (4 AWG)	M8 180 kg-cm (156.2 lb-in.) (17.65 Nm)
VFD550CH43L-00		70 mm² (2/0 AWG)		70 mm² (2/0 AWG)	35 mm² (2 AWG)	
VFD750CH43L-00		120 mm² (4/0 AWG)		120 mm² (4/0 AWG)	70 mm² (2/0 AWG)	

Frame E

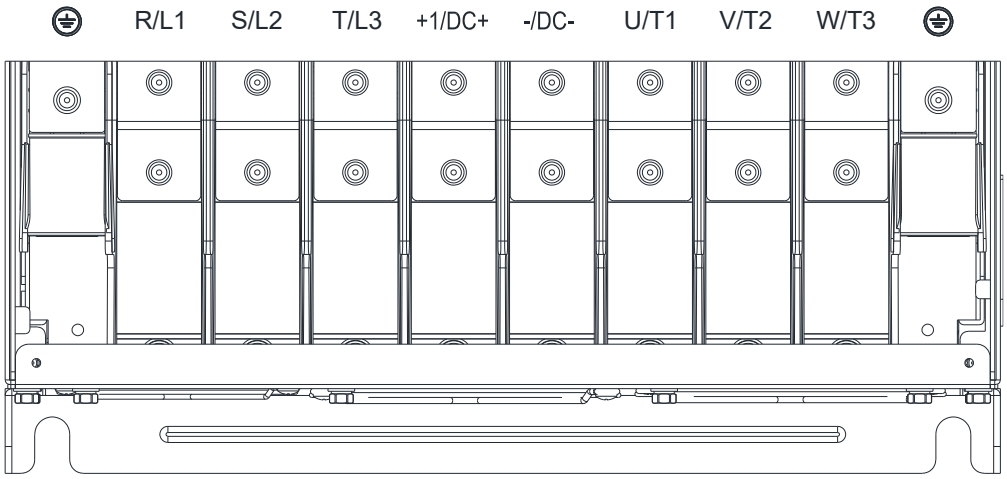

- If you install at Ta 50°C (for model names with last digit -00) / 40°C (for model names with last digit -21) environment, use copper wires have a voltage rating of 600V and are temperature resistance to 75°C or 90°C.
- If you install at Ta 50°C (for model names with last digit -00) / 40°C (for model names with last digit -21) above environment, use copper wires have a voltage rating of 600°C and are temperature resistance to 90°C or above.
- To be UL installation compliant, you must use copper wires when installing. The wire gauge is based on temperature resistance of 75°C, in accordance with UL requirements and recommendations. Do not reduce the wire gauge when using high-temperature resistant wire.

Model	Main Circuit Terminals R/L1、S/L2、T/L3、U/T1、V/T2、W/T3、-/DC-、+1/DC+			Terminal ⏚		
	Max. Wire Gauge	Min. Wire Gauge	Screw Spec. and Torque (±10%)	Max. Wire Gauge	Min. Wire Gauge	Screw Spec. and Torque (±10%)
VFD450CH23A-00	120 mm² (4/0 AWG)	50mm²*2 (1/0 AWG*2)	M8 180 kg-cm (156.2 lb-in.) (17.65 Nm)	50mm²*2 (1/0 AWG*2)	50mm²*1 (1/0 AWG*1)	M8 180 kg-cm (156.2 lb-in.) (17.65 Nm)
VFD550CH23A-00		95mm²*2 (3/0 AWG*2)		95mm²*2 (3/0 AWG*2)	95mm²*1 (3/0 AWG*1)	
VFD900CH43A-00		50mm²*2 (1/0 AWG*2)		50mm²*2 (1/0 AWG*2)	50mm²*1 (1/0 AWG*1)	
VFD1100CH43A-00		95mm²*2 (3/0 AWG*2)		95mm²*2 (3/0 AWG*2)	95mm²*1 (3/0 AWG*1)	
VFD450CH23A-21		50mm²*2 (1/0 AWG*2)		50mm²*2 (1/0 AWG*2)	50mm²*1 (1/0 AWG*1)	
VFD550CH23A-21		70mm²*2 (2/0 AWG*2)		70mm²*2 (2/0 AWG*2)	70mm²*1 (2/0 AWG*1)	
VFD900CH43A-21		50mm²*2 (1/0 AWG*2)		50mm²*2 (1/0 AWG*2)	50mm²*1 (1/0 AWG*1)	
VFD1100CH43A-21		70mm²*2 (2/0 AWG*2)		70mm²*2 (2/0 AWG*2)	70mm²*1 (2/0 AWG*1)	

Frame F

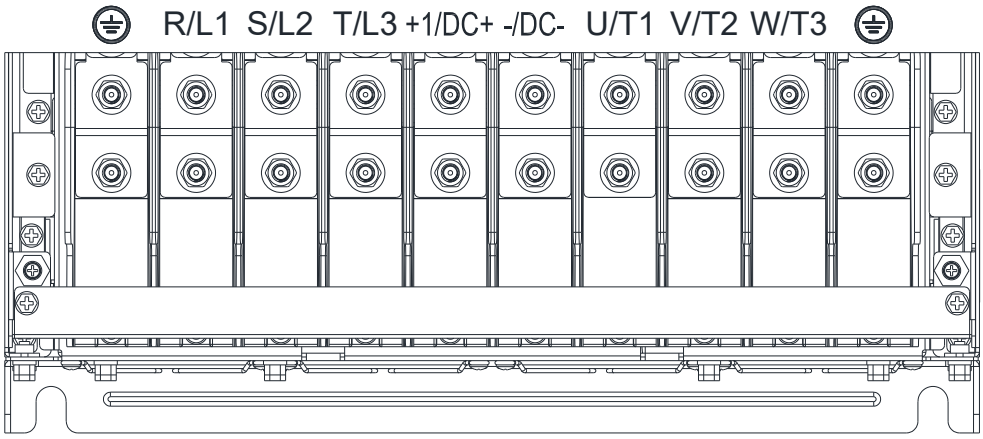

- If you install at Ta 50°C (for model names with last digit -00) / 40°C (for model names with last digit -21) environment, use copper wires have a voltage rating of 600V and are temperature resistance to 75°C or 90°C.
- If you install at Ta 50°C (for model names with last digit -00) / 40°C (for model names with last digit -21) above environment, use copper wires have a voltage rating of 600°C and are temperature resistance to 90°C or above.
- To be UL installation compliant, you must use copper wires when installing. The wire gauge is based on temperature resistance of 75°C, in accordance with UL requirements and recommendations. Do not reduce the wire gauge when using high-temperature resistant wire.

<table>
<tr><th rowspan="2">Model</th><th colspan="3">Main Circuit Terminals
R/L1、S/L2、T/L3、U/T1、V/T2、W/T3、
-/DC-、+1/DC+</th><th colspan="3">Terminal
⏚</th></tr>
<tr><th>Max. Wire Gauge</th><th>Min. Wire Gauge</th><th>Screw Spec. and Torque (±10%)</th><th>Max. Wire Gauge</th><th>Min. Wire Gauge</th><th>Screw Spec. and Torque (±10%)</th></tr>
<tr><td>VFD750CH23A-00</td><td rowspan="2">150 mm²*2
(300 MCM*2)</td><td>120 mm²*2
(4/0 AWG*2)</td><td rowspan="4">M8
180 kg-cm
(156.2 lb-in.)
(17.65 Nm)</td><td>150 mm²*2
(300 MCM*2)</td><td>120 mm²*2
(4/0 AWG)</td><td rowspan="4">M8
180 kg-cm
(156.2 lb-in.)
(17.65 Nm)</td></tr>
<tr><td>VFD1320CH43A-00</td><td>120 mm²*2
(4/0 AWG*2)</td><td>150 mm²*2
(300 MCM*2)</td><td>120 mm²*2
(4/0 AWG)</td></tr>
<tr><td>VFD750CH23A-21</td><td rowspan="2">120 mm²*2
(4/0 AWG*2)</td><td>95 mm²*2
(3/0 AWG*2)</td><td>120 mm²*2
(4/0 AWG*2)</td><td>95 mm²*2
(3/0 AWG)</td></tr>
<tr><td>VFD1320CH43A-21</td><td>95 mm²*2
(3/0 AWG*2)</td><td>120 mm²*2
(4/0 AWG*2)</td><td>95 mm²*2
(3/0 AWG)</td></tr>
</table>

Frame G

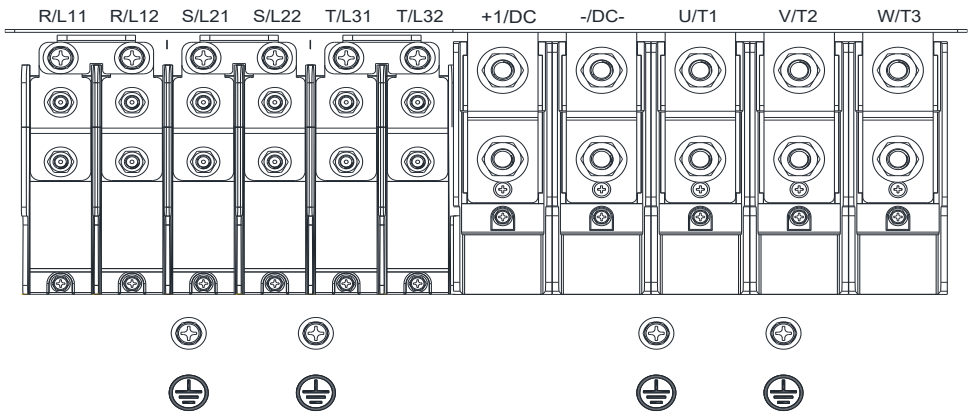

- If you install at Ta 50°C (for 460V model names with last digit -00) / 40°C (for 460V model names with last digit -21) environment, use copper wires have a voltage rating of 600V and are temperature resistance to 75°C or 90°C.
- If you install at Ta 50°C (for 460V model names with last digit -00) / 40°C (for 460V model names with last digit -21) above environment, use copper wires have a voltage rating of 600V and are temperature resistance to 90°C or above.
- For VFD2200CH43A-00 models: if you install at Ta 45°C above environment, use copper wires have a voltage rating of 600V and are temperature resistance to 90°C or above.
- To be UL installation compliant, you must use copper wires when installing.The wire gauge is based on temperature resistance of 75°C, inaccordance with UL requirements and recommendations. Do not reduce the wire gauge when using high-temperature resistant wire.

Model	Main Circuit Terminals R/L11、R/L12、S/L21、S/L22、T/L31、T/L32			Terminal ⏚		
	Max. Wire Gauge	Min. Wire Gauge	Screw Spec. and Torque (±10%)	Max. Wire Gauge	Min. Wire Gauge	Screw Spec. and Torque (±10%)
VFD1600CH43A-00	120 mm²*4 (250MCM*4)	50 mm²*4 (1 AWG*4)	M8 180 kg-cm (156.2 lb-in.) (17.65 Nm)	50 mm²*4 (1 AWG*4)	50 mm²*2 (1 AWG*2)	M8 180 kg-cm (156.2 lb-in.) (17.65 Nm)
VFD1850CH43A-00		70 mm²*4 (2/0 AWG*4)		70 mm²*4 (2/0 AWG*4)	70 mm²*2 (2/0 AWG*2)	
VFD2200CH43A-00		95 mm²*4 (3/0 AWG*4)		95 mm²*4 (3/0 AWG*4)	95 mm²*2 (3/0 AWG*2)	
VFD1600CH43A-21		35 mm²*4 (2 AWG*4)		35 mm²*4 (2 AWG*4)	35 mm²*2 (2 AWG*2)	
VFD1850CH43A-21		50 mm²*4 (1/0 AWG*4)		50 mm²*4 (1/0 AWG*4)	50 mm²*2 (1/0 AWG*2)	
VFD2200CH43A-21		70 mm²*4 (2/0 AWG*4)		70 mm²*4 (2/0 AWG*4)	70 mm²*2 (2/0 AWG*2)	

Model	Main Circuit Terminals U/T1、V/T2、W/T3、-/DC-、+1/DC+			Terminal ⏚		
	Max. Wire Gauge	Min. Wire Gauge	Screw Spec. and Torque (±10%)	Max. Wire Gauge	Min. Wire Gauge	Screw Spec. and Torque (±10%)
VFD1600CH43A-00	240 mm²*2 (500MCM*2)	150 mm²*2 (300MCM*2)	M12 408 kg-cm (354.1 lb-in.) (39.98 Nm)	150 mm²*2 (300MCM*2)	150 mm²*1 (300MCM*1)	M8 180 kg-cm (156.2 lb-in.) (17.65 Nm)
VFD1850CH43A-00		240 mm²*2 (400MCM*2)		240 mm²*2 (400MCM*2)	240 mm²*1 (400MCM*1)	
VFD2200CH43A-00		240 mm²*2 (500MCM*2)		240 mm²*2 (500MCM*2)	240 mm²*1 (500MCM*1)	
VFD1600CH43A-21		120 mm²*2 (4/0MCM*2)		120 mm²*2 (4/0MCM*2)	120 mm²*1 (4/0MCM*1)	
VFD1850CH43A-21		150 mm²*2 (300MCM*2)		150 mm²*2 (300MCM*2)	150 mm²*1 (300MCM*1)	
VFD2200CH43A-21		240 mm²*2 (400MCM*2)		240 mm²*2 (400MCM*2)	240 mm²*1 (400MCM*1)	

Frame H

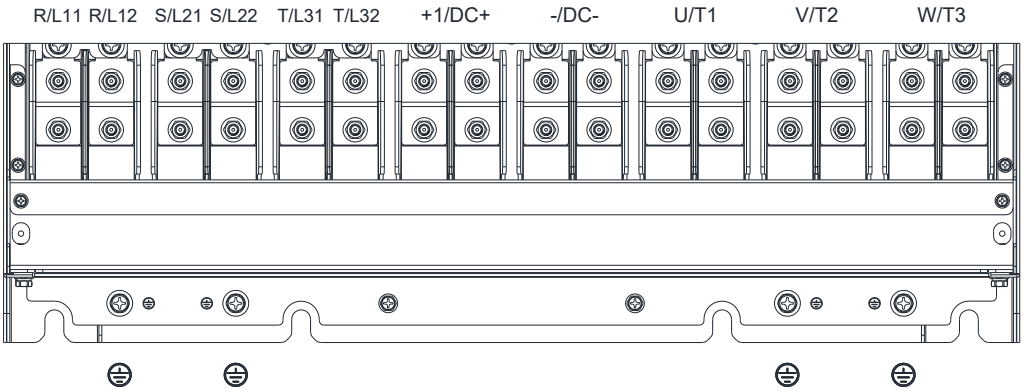

- If you install at Ta 50°C (for 460V model names with last digit A-00) / 40°C (for 460V model names with last digit C-21) environment, use copper wires have a voltage rating of 600V and are temperature resistance to 75°C or 90°C.
- If you install at Ta 50°C (for 460V model names with last digit A-00) / 40°C (for 460V model names with last digit C-21) above environment, use copper wires have a voltage rating of 600V and are temperature resistance to 90°C or above.
- To be UL installation compliant, you must use copper wires when installing.The wire gauge is based on temperature resistance of 75°C, inaccordance with UL requirements and recommendations. Do not reduce the wire gauge when using high-temperature resistant wire.

Model	Main Circuit Terminals R/L11、R/L12、S/L21、S/L22、T/L31、T/L32、U/T1、V/T2、W/T3、-/DC-、+1/DC+			Terminal ⏚		
	Max. Wire Gauge	Min. Wire Gauge	Screw Spec. and Torque (±10%)	Max. Wire Gauge	Min. Wire Gauge	Screw Spec. and Torque (±10%)
VFD2800CH43A-00	185 mm²*4 (350 MCM*4)	120 mm²*4 (4/0 AWG*4)	M8 180 kg-cm (156.2 lb-in.) (17.65 Nm)	120 mm²*4 (4/0AWG*4)	120 mm²*2 (4/0 AWG*2)	M8 180 kg-cm (156.2 lb-in.) (17.65 Nm)
VFD2800CH43C-21		95 mm²*4 (3/0 AWG*4)		95 mm²*4 (3/0 AWG*4)	95 mm²*2 (3/0 AWG*2)	
VFD3150CH43A-00		150 mm²*4 (300 MCM*4)		150 mm²*4 (300 MCM*4)	150 mm²*2 (300 MCM*2)	
VFD3550CH43A-00		150 mm²*4 (300 MCM*4)		150 mm²*4 (300 MCM*4)	150 mm²*2 (300 MCM*2)	
VFD3150CH43C-21		120 mm²*4 (4/0 AWG*4)		120 mm²*4 (4/0 AWG*4)	120 mm²*2 (4/0 AWG*2)	
VFD3550CH43C-21		120 mm²*4 (250 MCM*4)		120 mm²*4 (250 MCM*4)	120 mm²*2 (250 MCM *2)	

Frame H

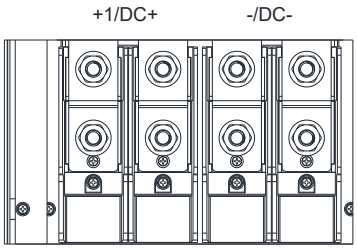

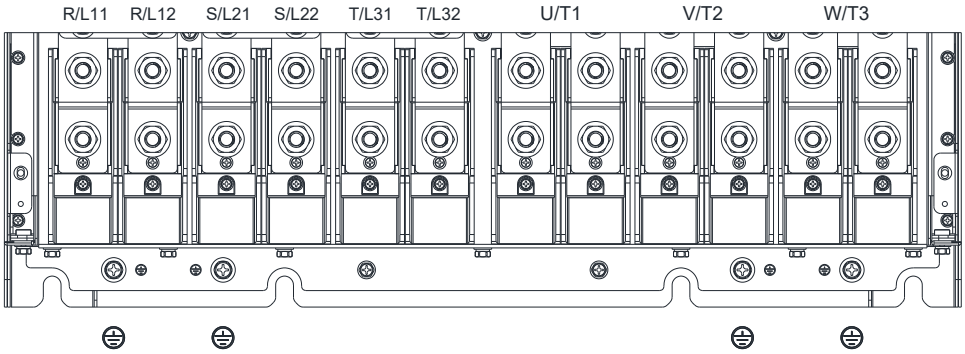

- If you install at Ta 50°C (for 460V model names with last digit A-00) / 40°C (for 460V model names with last digit C-21) environment, use copper wires have a voltage rating of 600V and are temperature resistance to 75°C or 90°C.
- If you install at Ta 50°C (for 460V model names with last digit A-00) / 40°C (for 460V model names with last digit C-21) above environment, use copper wires have a voltage rating of 600V and are temperature resistance to 90°C or above.
- To be UL installation compliant, you must use copper wires when installing.The wire gauge is based on temperature resistance of 75°C, inaccordance with UL requirements and recommendations. Do not reduce the wire gauge when using high-temperature resistant wire.

Model	Main Circuit Terminals R/L11、R/L12、S/L21、S/L22、T/L31、T/L32、U/T1、V/T2、W/T3、+1/DC+、-/DC-			Terminal ⏚		
	Max. Wire Gauge	Min. Wire Gauge	Screw Spec. and Torque (±10%)	Max. Wire Gauge	Min. Wire Gauge	Screw Spec. and Torque (±10%)
VFD4500CH43A-00	240 mm²*4 (500 MCM*4)	240 mm²*4 (500MCM*4)	M12 408 kg-cm (354.1 lb-in.) (39.98 Nm)	240 mm²*4 (500MCM*4)	240 mm²*2 (500MCM*2)	M8 180 kg-cm (156.2 lb-in.) (17.65 Nm)
VFD4500CH43C-21		185 mm²*4 (350MCM*4)		185 mm²*4 (350MCM*4)	185 mm²*2 (350MCM*2)	

[This page intentionally left blank]

Chapter 6 Control Terminals

6-1 Remove the Cover for Wiring

6-2 Specifications of Control Terminal

6-3 Remove the Terminal Block

CAUTION

Analog input terminals (AVI, ACI, AUI, ACM)

☑ Analog input signals are easily affected by external noise. Use shielded wiring and keep it as short as possible (< 20 m) with proper grounding. If the noise is inductive, connecting the shield to the ACM terminal can reduce interference.

☑ Use twisted-pair wire for weak analog signals.

☑ If the analog input signals are affected by noise from the AC motor drive, connect a capacitor and a ferrite core as shown in Figure 6-1.

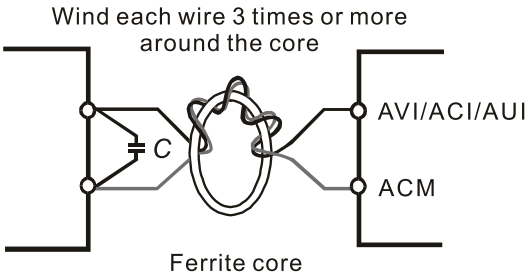

Figure 6-1

Digital inputs (FWD, REV, MI1–MI8, COM)

☑ The “COM” terminal is a common terminal of the photo-coupler in all the wiring methods.

① Sink Mode
with internal power (+24V$_{DC}$)

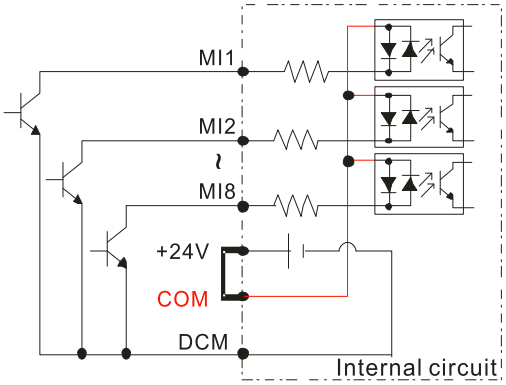

Figure 6-2

② Source Mode
with internal power (+24V$_{DC}$)

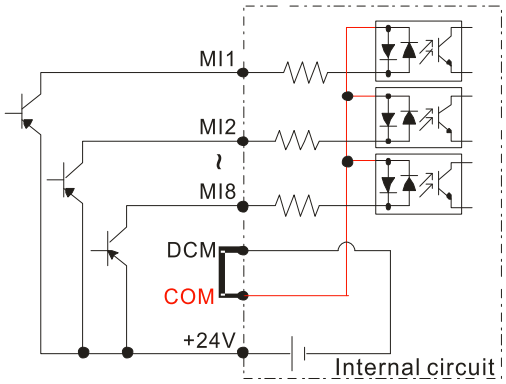

Figure 6-3

③ Sink Mode
with external power

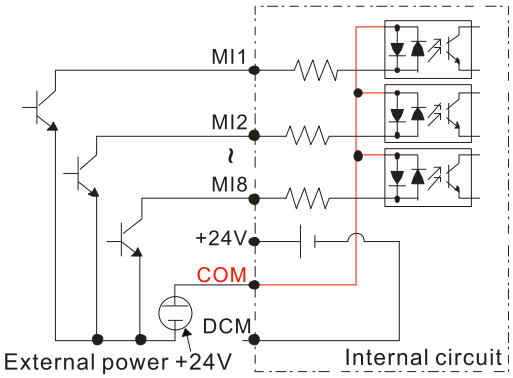

Figure 6-4

④ Source Mode
with external power

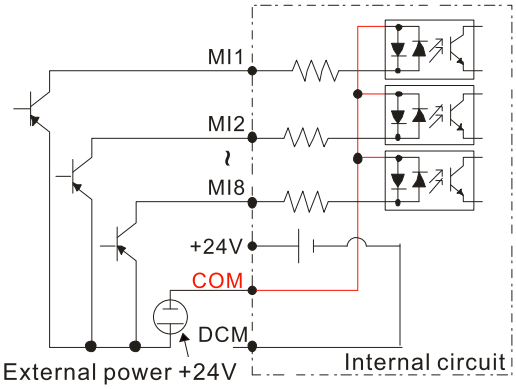

Figure 6-5

	☑ When the photo-coupler uses the internal power supply, the switch connection for Sink and Source modes shows as Figure 6-2 and Figure 6-3: MI-DCM: Sink mode MI-+24V: Source mode ☑ When the photo-coupler uses the external power supply, remove the short-circuit cable between +24V and COM terminals. The switch connection for Sink and Source modes shows as Figure 6-4 and Figure 6-5: The “+” of 24V connecting to “COM: Sink mode The “-“ of 24V connecting to COM: Source mode **Transistor outputs (MO1, MO2, MCM)** ☑ Make sure to connect the digital outputs to the right polarity. ☑ When connecting a relay to the digital outputs connect a surge absorber across the coil and check the polarity.

6-1 Remove the Cover for Wiring

Remove the top cover before wiring the multi-function input and output terminals.

NOTE: The drive appearances shown in the figures are for reference only, a real drive may look different.

Frame A

Applicable models:

VFD007CH23A-21, VFD015CH23A-21, VFD022CH23A-21, VFD037CH23A-21, VFD007CH43A-21, VFD015CH43A-21, VFD022CH43A-21, VFD037CH43A-21, VFD055CH43A-21, VFD007CH4EA-21, VFD015CH4EA-21, VFD022CH4EA-21, VFD037CH4EA-21, VFD055CH4EA-21

Frame B

Applicable models:

VFD055CH23A-21, VFD075CH23A-21, VFD110CH23A-21, VFD075CH43A-21, VFD110CH43A-21, VFD150CH43A-21, VFD075CH4EA-21, VFD110CH4EA-21, VFD150CH4EA-21

Screw torque: 12–15 kg-cm / (10.4–13 lb-in.) / (1.2–1.5 Nm)

Loosen the screws and press the tabs on both sides to remove the cover.

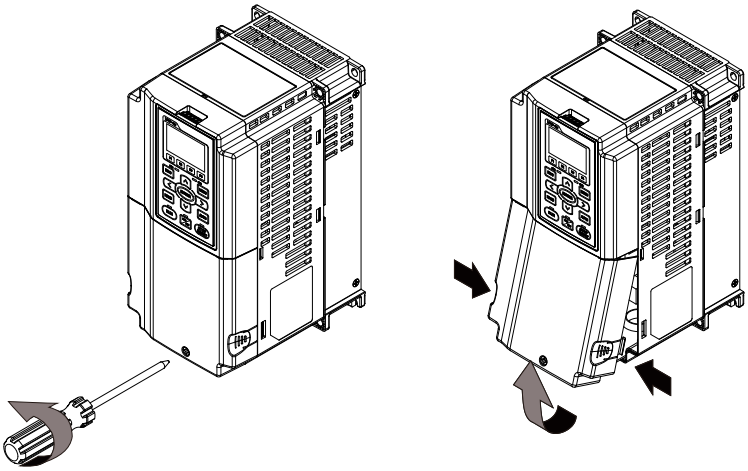

Figure 6-6

Frame C

Applicable models:

VFD150CH23A-21, VFD185CH23A-21, VFD185CH43A-21, VFD220CH43A-21, VFD300CH43A-21, VFD185CH4EA-21, VFD220CH4EA-21, VFD300CH4EA-21

Screw torque: 12–15 kg-cm / (10.4–13 lb-in.) / (1.2–1.5 Nm)

Loosen the screws and press the tabs on both sides to remove the cover.

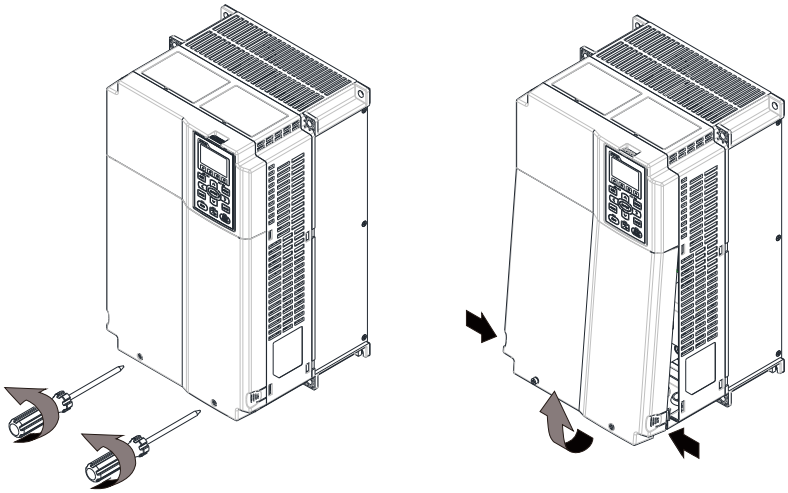

Figure 6-7

Frame D0

Applicable models:

VFD370CH43S-00, VFD370CH43S-21

Frame D

Applicable models:

VFD220CH23A-00, VFD300CH23A-00, VFD370CH23A-00, VFD370CH43A-00, VFD450CH43A-00, VFD550CH43A-00, VFD750CH43A-00, VFD220CH23A-21, VFD300CH23A-21, VFD370CH23A-21, VFD450CH43A-21, VFD550CH43A-21, VFD750CH43A-21, VFD450CH43L-00, VFD550CH43L-00, VFD750CH43L-00

Screw torque: 12–15 kg-cm / (10.4–13 lb-in.) / (1.2–1.5 Nm)

To remove the cover, lift it slightly and pull outward.

Loosen the screws and press the tabs on both sides to remove the cover.

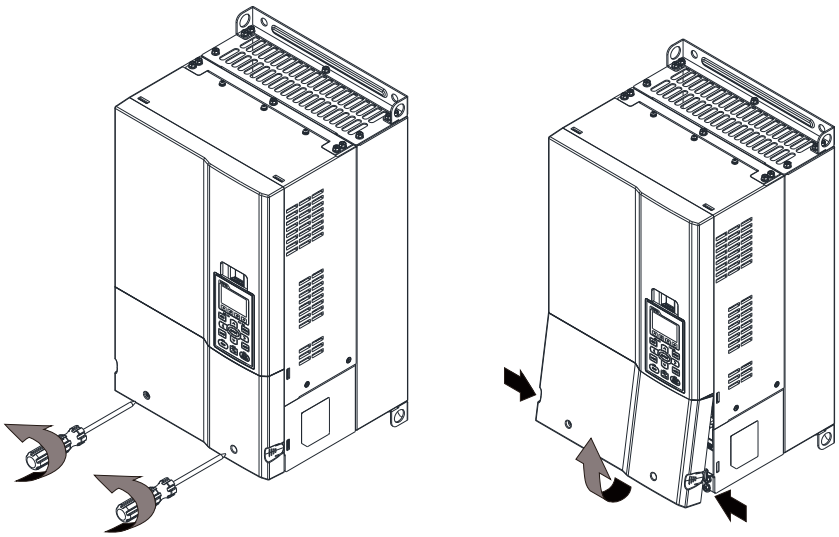

Figure 6-8

Frame D0

Applicable models:

VFD370CH43L-00

Screw torque: 12–15 kg-cm / (10.4–13 lb-in.) / (1.2–1.5 Nm)

To remove the cover, spin the buttom side of the cover and lift it until the clip is off the groove.

NOTE: When you put the cover back, put the two clips onto the groove on the top of the drive first, then spin the cover to close it.

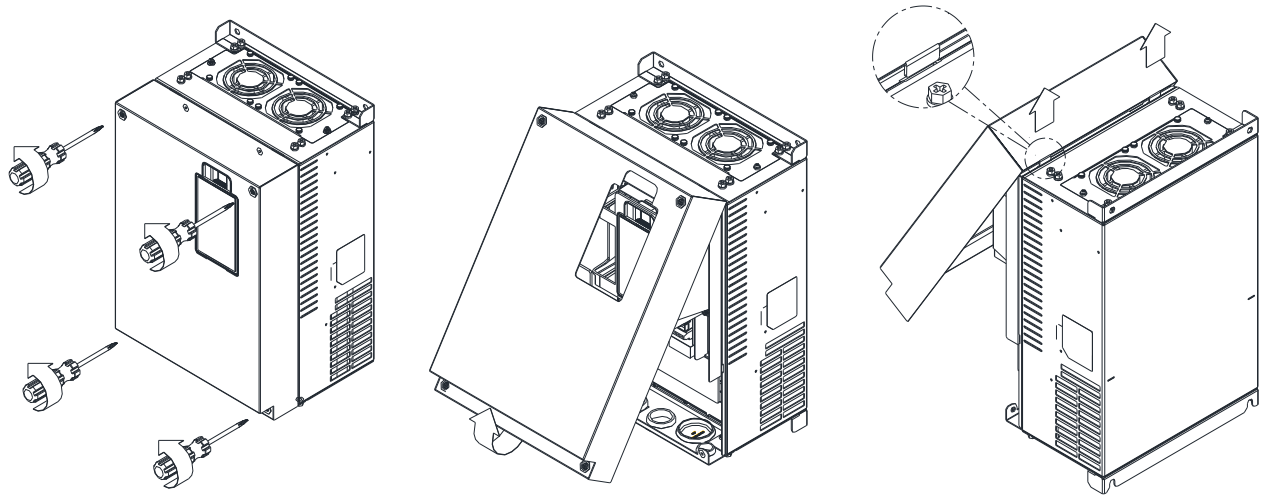

Figure 6-9

Frame E

Applicable models:

VFD450CH23A-00, VFD550CH23A-00, VFD900CH43A-00, VFD1100CH43A-00, VFD450CH23A-21, VFD550CH23A-21, VFD900CH43A-21, VFD1100CH43A-21

Screw torque: 12–15 kg-cm / (10.4–13 lb-in.) / (1.2–1.5 Nm)

To remove the cover, lift it slightly and pull outward (as shown in the figure below).

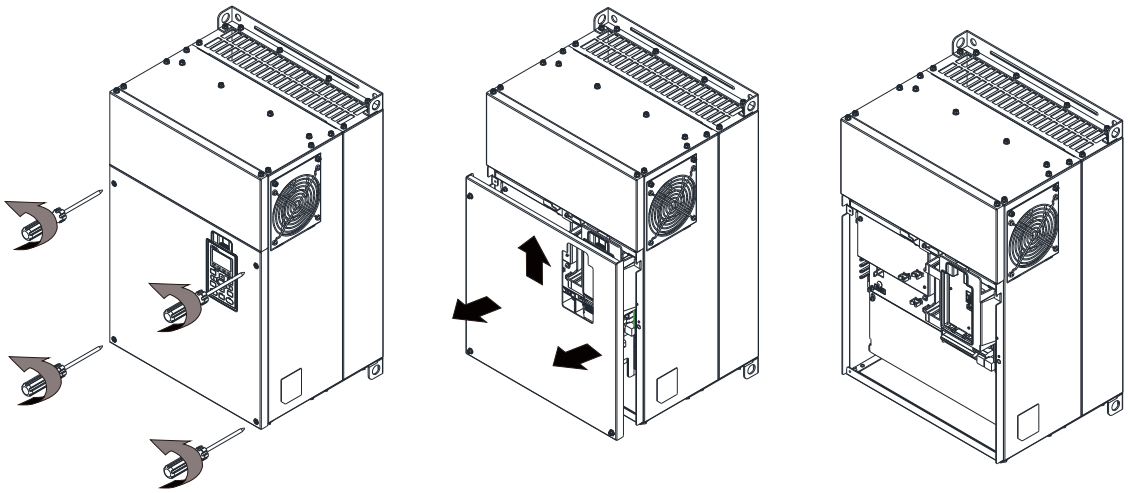

Figure 6-10

Frame F

Applicable models:

VFD750CH23A-00, VFD1320CH43A-00, VFD750CH23A-21, VFD1320CH43A-21

Screw torque: 12–15 kg-cm / (10.4–13 lb-in.) / (1.2–1.5 Nm)

To remove the cover, lift it slightly and pull outward (as shown in the figure below).

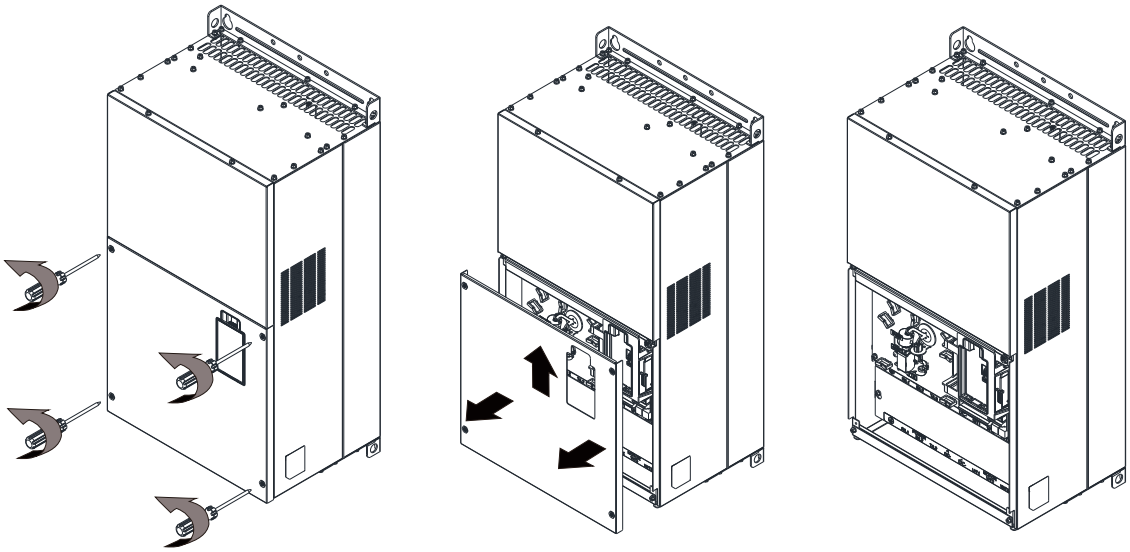

Figure 6-11

Frame G

Applicable models:

VFD1600CH43A-00, VFD1850CH43A-00, VFD2200CH43A-00, VFD1600CH43A-21, VFD1850CH43A-21, VFD2200CH43A-21

Screw torque: 12–15 kg-cm / (10.4–13 lb-in.) / (1.2–1.5 Nm)

To remove the cover, lift it slightly and pull outward (as shown in the figure below).

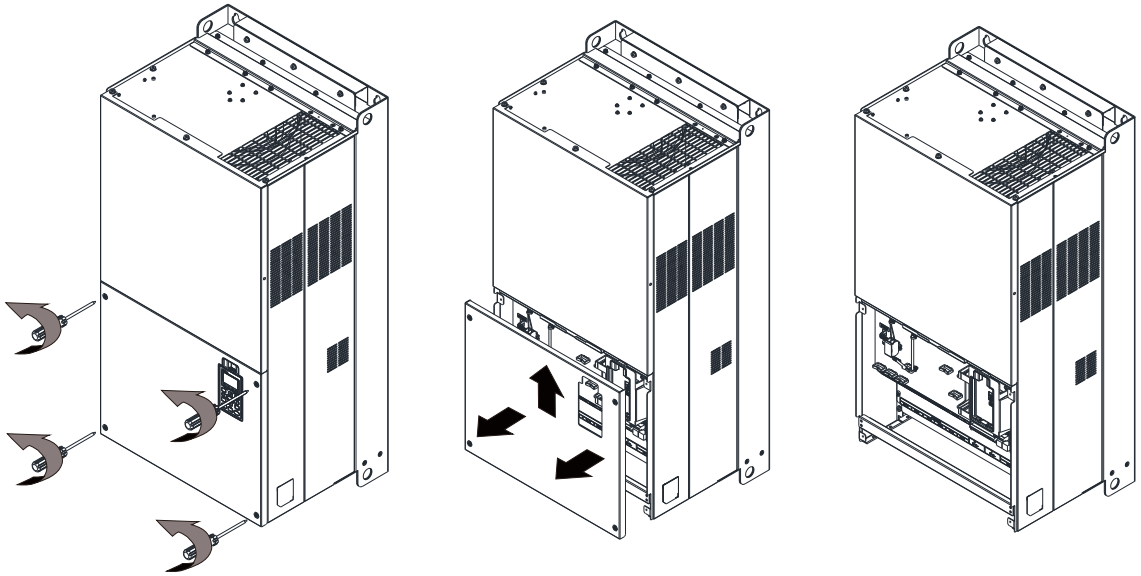

Figure 6-12

Frame H

Applicable models:

VFD2800CH43A-00, VFD3150CH43A-00, VFD3550CH43A-00, VFD4500CH43A-00, VFD2800CH43C-21, VFD3150CH43C-21, VFD3550CH43C-21, VFD4500CH43C-21

Screw torque: 14–16 kg-cm / (12.15–13.89 lb-in.) / (1.4–1.6 Nm)

To remove the cover, lift it slightly and pull outward (as shown in the figure below).

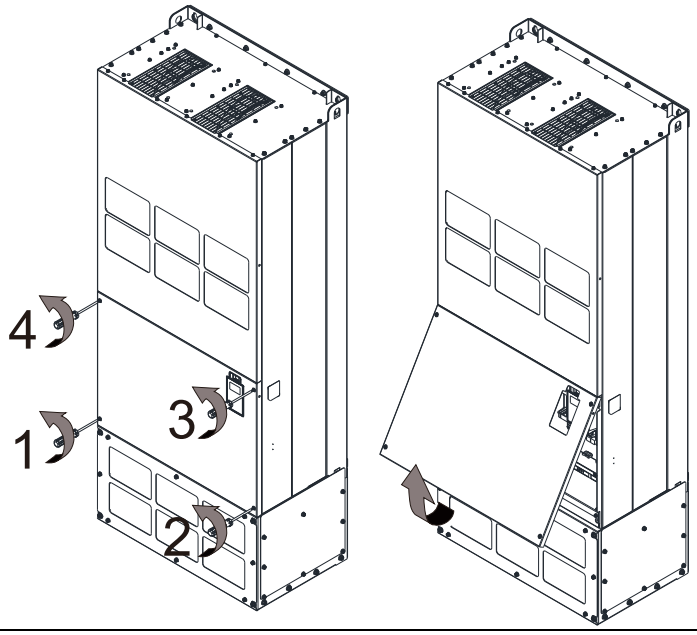

Figure 6-13

6-2 Specifications of Control Terminal

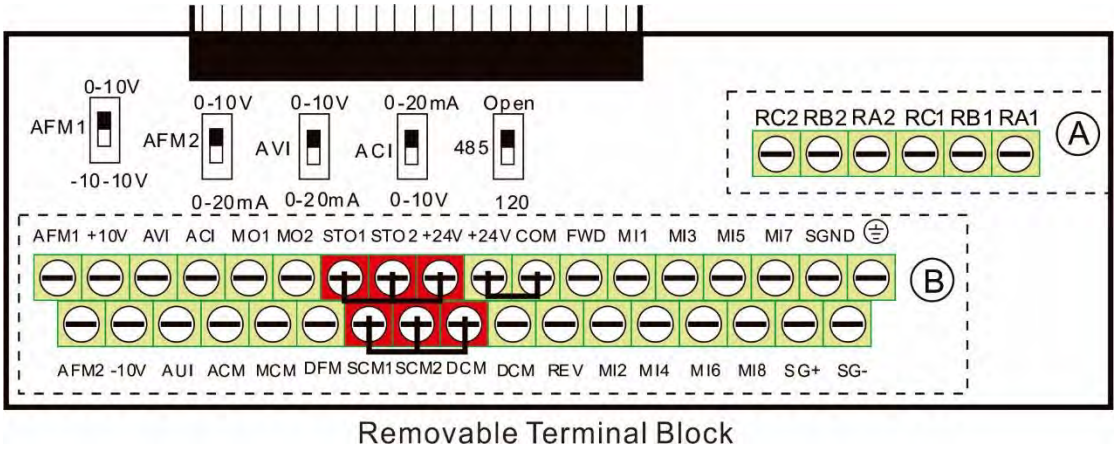

Figure 6-14

Function Name	Area	Conductor	Stripping Length (mm)	Maximum Wire Gauge	Minimum Wire Gauge	Tightening Torque (±10 %)
RELAY Terminals	Ⓐ	Conductor cross section solid wire	4–5	1.5 mm² (16 AWG)	0.2 mm² (26 AWG)	5 kg-cm (4.3 lb-in.) (0.49 Nm)
		Conductor cross section stranded wire				
Control Terminals	Ⓑ	Conductor cross section solid wire	6–7			8 kg-cm (6.9 lb-in.) (0.78 Nm)
		Conductor cross section stranded wire				
Control Terminals	Ⓒ	Conductor cross section solid wire				2 kg-cm (1.7 lb-in.) (0.20 Nm)
		Conductor cross section stranded wire				

Table 6-1

Wiring precautions:

- In the figure above, the default for STO1, STO2, +24V and SCM1, SCM2, DCM are short-circuited. Use the +24V power supply of the safety function (as shown in section Ⓒ of above figure) for STO only. Do NOT use it for other purposes. The default setting for +24V-COM is short-circuited and SINK mode (NPN); refer to Chapter 4 Wiring for detail.
- Tighten the wiring with slotted screwdriver:
  Ⓐ Ⓑ is 3.5 mm (wide) x 0.6 mm (thick); Ⓒ is 2.5 mm (wide) x 0.4 mm (thick)
- When wiring bare wires, ensure that they are perfectly arranged to go through the wiring holes.

Terminals	Terminal Function	Default Setting (NPN mode)
+24V	Digital control signal common (Source)	+24V ± 5% 200 mA
COM	Digital control signal common (Sink)	Common for multi-function input terminals
FWD	Forward-Stop command	FWD-DCM: ON➔ forward running OFF➔ deceleration to stop
REV	Reverse-Stop command	REV-DCM: ON➔ reverse running OFF➔ deceleration to stop

Terminals	Terminal Function	Default Setting (NPN mode)
MI1 – MI8	Multi-function input 1–8	Refer to Pr.02-01–02-08 to program the multi-function inputs MI1–MI8. Source Mode ON: the activation current is 3.3 mA ≥ 11 V_{DC} OFF: cut-off voltage ≤ 5 V_{DC} Sink Mode ON: the activation current is 3.3 mA ≤ 13 V_{DC} OFF: cut-off voltage ≥ 19 V_{DC}
DFM	Digital frequency meter 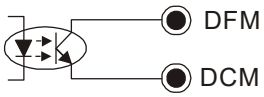 Figure 6-15	DFM uses pulse voltage as an output monitoring signal; Duty-cycle: 50% Min. load impedance: 1 kΩ / 100 pf Max. current: 30 mA Max. voltage: 30 V_{DC}
DCM	Digital control / Frequency signal common	
MO1	Multi-function output 1 (photocoupler)	The AC motor drive outputs various monitoring signals, such as drive in operation, frequency attained, and overload indication through a transistor (open collector). 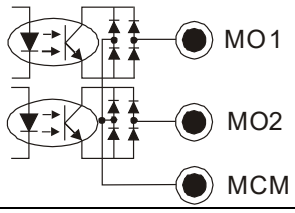 Figure 6-16
MO2	Multi-function output 2 (photocoupler)	
MCM	Multi-function output common	Max. 48 V_{DC} 50 mA
RA1	Multi-function relay output 1 (N.O.) a	Resistive Load 3 A (N.O.) / 3 A (N.C.) 250 V_{AC} 5 A (N.O.) / 3 A (N.C.) 30 V_{DC} Inductive Load (COS 0.4) 1.2 A (N.O.) / 1.2 A (N.C.) 250 V_{AC} 2.0 A (N.O.) / 1.2 A (N.C.) 30 V_{DC} To output different kinds of monitoring signals such as motor drive in operation, frequency reached and overload indication.
RB1	Multi-function relay output 1 (N.C.) b	
RC1	Multi-function relay common	
RA2	Multi-function relay output 2 (N.O.) a	
RB2	Multi-function relay output 2 (N.C.) b	
RC2	Multi-function relay common	
+10V	Potentiometer power supply	Power supply for analog frequency setting: +10 V_{DC} 20 mA
-10V	Potentiometer power supply	Power supply for analog frequency setting: -10 V_{DC} 20 mA
AVI	Analog voltage input 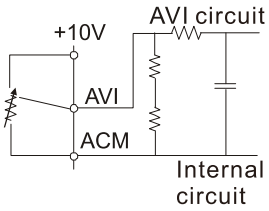 Figure 6-17	Impedance: 20 kΩ Range: 0–20 mA / 4–20 mA / 0–10 V = 0–Max. Output Frequency (Pr.01-00) AVI switch, default setting is 0–10 V

Terminals	Terminal Function	Default Setting (NPN mode)
ACI	Analog current input 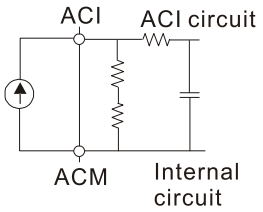 Figure 6-18	Impedance: 250 Ω Range: 0–20 mA / 4–20 mA / 0–10 V = 0–Max. Output Frequency (Pr.01-00) ACI Switch, default setting is 4–20 mA
AUI	Auxiliary analog voltage input 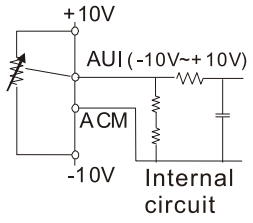 Figure 6-19	Impedance: 20 kΩ Range: -10– +10 V_{DC} = 0–Max. Output Frequency(Pr.01-00)
AFM1	Multi-function analog voltage output 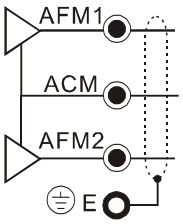 Figure 6-20	0–10 V Max. output current 2 mA, Max. load 5 kΩ -10–10 V maximum output current 2 mA, maximum load 5 kΩ Output current: 2 mA max Resolution: 0–10 V corresponds to Max. operation frequency Range: 0–10 V → -10– +10 V AFM 1 Switch, default setting is 0–10 V
AFM2		0–10 V Max. output current 2 mA, Max. load 5 kΩ 0–20 mA Max. load 500 Ω Output current: 20 mA max Resolution: 0–10 V corresponds to Max. operation frequency Range: 0–10 V → 4–20 mA AFM 2 Switch, default setting is 0–10 V
ACM	Analog Signal Common	Common for analog terminals
STO1	Default setting is shorted	
SCM1	Power removal safety function for EN954-1 and IEC/EN61508	
STO2	When STO1–SCM1;STO2–SCM2 is activated, the activation current is 3.3 mA ≥ 11 V_{DC}	
SCM2	**NOTE:** Refer to Chapter 17 Safe Torque Off Function for details.	
SG+	Modbus RS-485	
SG-	**NOTE:** Refer to Chapter 12 Description of Parameter Settings parameter group 09	
SGND	Communication Parameters for details.	
RJ45	PIN 1, 2, 7, 8 : Reserved PIN 3, 6: SGND PIN 4: SG- PIN 5: SG+	

NOTE: Wire size of analog control signals: 0.75 mm^2 (18 AWG) with shielded wire

Table 6-2

6-3 Remove the Terminal Block

1. Loosen the screws by screwdriver. (As shown in figure below).

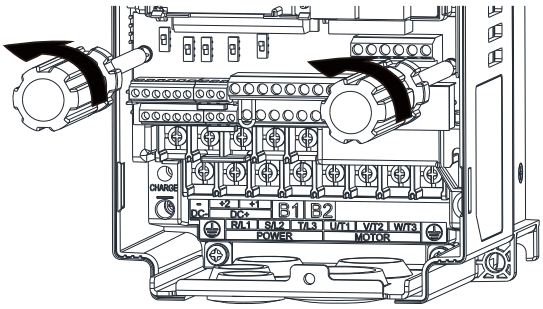

Figure 6-21

2. Remove the control board by pulling it out for a distance 6–8 cm (as 1 in the figure) then lift the control board upward (as 2 in the figure).

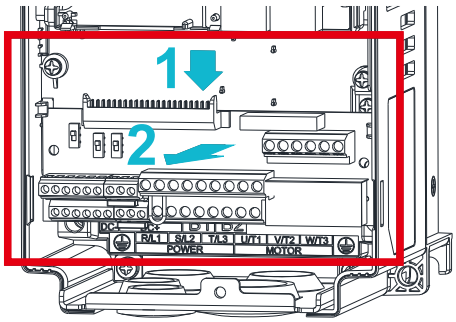

Figure 6-22

[This page intentionally left blank]

Chapter 7 Optional Accessories

7-1 Brake Resistors and Brake Units Used in AC Motor Drives

7-2 Magnetic Contactor / Air Circuit Breaker and Non-fuse Circuit Breaker

7-3 Fuse Specification Chart

7-4 AC / DC Reactor

7-5 Zero Phase Reactors

7-6 EMC Filter

7-7 Panel Mounting (MKC-KPPK)

7-8 Conduit Box Kit

7-9 Fan Kit

7-10 Flange Mounting Kit

7-11 Power Terminal Kit

7-12 USB / RS-485 Communication Interface IFD6530

The optional accessories listed in this chapter are available upon request. Installing additional accessories to your drive can substantially improve the drive's performance. Select accessories according to your needs or contact your local distributor for suggestion.

7-1 Brake Resistors and Brake Units Used in AC Motor Drives

230V Model

Model	Applicable Motor		125% Braking Torque 10% ED *1							Max. Braking Torque *2		
	HP	kW	Braking Torque (kg-m)	Brake Unit VFDB *4	Resistor Value Spec. for Each AC Motor Drive	Brake Resistor for Each Brake Unit P/N *3	Q'ty	Usage	Total Braking Current (A)	Min. Resistor Value (Ω)	Max Total Braking Current (A)	Peak Power (kW)
VFD007CH23A-21	1	0.7	0.5	-	80W 200Ω	BR080W200	1	-	1.9	63.3	6	2.3
VFD150CH23A-21	2	1.5	1.0	-	200W 91Ω	BR200W091	1	-	4.2	47.5	8	3.0
VFD220CH23A-21	3	2.2	1.5	-	300W 70Ω	BR300W070	1	-	5.4	38.0	10	3.8
VFD037CH23A-21	5	3.7	2.5	-	400W 40Ω	BR400W040	1	-	9.5	19.0	20	7.6
VFD055CH23A-21	7.5	5.5	3.7	-	1000W 20Ω	BR1K0W020	1	-	19	14.6	26	9.9
VFD075CH23A-21	10	7.5	5.1	-	1000W 20Ω	BR1K0W020	1	-	19	14.6	26	9.9
VFD110CH23A-21	15	11	7.5	-	1500W 13Ω	BR1K5W013	1	-	29	12.6	29	10.6
VFD150CH23A-21	20	15	10.2	-	2000W 8.6Ω	BR1K0W4P3	2	2 in series	44	8.3	46	17.5
VFD185CH23A-21	25	18	12.2	-	2000W 8.6Ω	BR1K0W4P3	2	2 in series	44	8.3	46	17.5
VFD220CH23A-00 VFD220CH23A-21	30	22	14.9	2022*1	3000W 6.6Ω	BR1K5W3P3	2	2 in series	58	6.3	60	22.6
VFD300CH23A-00 VFD300CH23A-21	40	30	20.3	2015*2	4000W 5.1Ω	BR1K0W5P1	2	2 in series	75	4.8	80	30.4
VFD370CH23A-00 VFD370CH23A-21	50	37	25.1	2022*2	4800W 3.9Ω	BR1K2W3P9	2	2 in series	97	3.2	120	45.6
VFD450CH23A-00 VFD450CH23A-21	60	45	30.5	2022*2	6000W 3.3Ω	BR1K5W3P3	2	2 in series	118	3.2	120	45.6
VFD550CH23A-00 VFD550CH23A-21	75	55	37.2	2022*3	7200W 2.6Ω	BR1K2W3P9	2	2 in series	145	2.1	180	68.4
VFD750CH23A-00 VFD750CH23A-21	100	75	50.8	2022*4	9600W 2Ω	BR1K2W3P9	2	2 in series	190	1.6	240	91.2

Table 7-1

460V Model

Model	Applicable Motor		125% Braking Torque 10% ED *1							Max. Braking Torque *2		
	HP	kW	Braking Torque (kg-m)	Brake Unit VFDB *4	Resistor Value Spec. for Each AC Motor Drive	Brake Resistor for Each Brake Unit P/N *3	Q'ty	Usage	Total Braking Current (A)	Min. Resistor Value (Ω)	Max. Total Braking Current (A)	Peak Power (kW)
VFD007CH43A-21 VFD007CH4EA-21	1	0.7	0.5	-	80W 750Ω	BR080W750	1	-	1	190.0	4	3.0
VFD015CH43A-21 VFD015CH4EA-21	2	1.5	1.0	-	200W 360Ω	BR200W360	1	-	2.1	126.7	6	4.6
VFD022CH43A-21 VFD022CH4EA-21	3	2.2	1.5	-	300W 250Ω	BR300W250	1	-	3	108.6	7	5.3
VFD037CH43A-21 VFD037CH4EA-21	5	3.7	2.5	-	400W 150Ω	BR400W150	1	-	5.1	84.4	9	6.8
VFD055CH43A-21 VFD055CH4EA-21	7.5	5.5	3.7	-	1000W 75Ω	BR1K0W075	1	-	10.2	54.3	14	10.6
VFD075CH43A-21 VFD075CH4EA-21	10	7.5	5.1	-	1000W 75Ω	BR1K0W075	1	-	10.2	47.5	16	12.2
VFD110CH43A-21 VFD110CH4EA-21	15	11	7.5	-	1500W 43Ω	BR1K5W043	1	-	17.6	42.2	18	13.7

Model	Applicable Motor		125% Braking Torque 10% ED *1							Max. Braking Torque *2		
	HP	kW	Braking Torque (kg-m)	Brake Unit VFDB *4	Resistor Value Spec. for Each AC Motor Drive	Brake Resistor for Each Brake Unit P/N *3	Q'ty	Usage	Total Braking Current (A)	Min. Resistor Value (Ω)	Max. Total Braking Current (A)	Peak Power (kW)
VFD150CH43A-21 VFD150CH4EA-21	20	15	10.2	-	2000W 32Ω	BR1K0W016	2	2 in series	24	26.2	29	22.0
VFD185CH43A-21 VFD185CH4EA-21	25	18	12.2	-	2000W 32Ω	BR1K0W016	2	2 in series	24	23.0	33	25.1
VFD220CH43A-21 VFD220CH4EA-21	30	22	14.9	-	3000W 26Ω	BR1K5W013	2	2 in series	29	23.0	33	25.1
VFD300CH43A-21 VFD300CH4EA-21	40	30	20.3	-	4000W 16Ω	BR1K0W016	4	2 parallel, 2 in series	47.5	14.1	54	41.0
VFD370CH43S-00 VFD370CH43S-21	50	37	25.1	4045*1	4800W 15Ω	BR1K2W015	4	2 parallel, 2 in series	50	12.7	60	45.6
VFD370CH43L-00	50	37	25.1	-	4800W 15Ω	BR1K2W015	4	2 parallel, 2 in series	50	14.1	54	41.0
VFD450CH43A-00 VFD450CH43A-21	60	45	30.5	4045*1	6000W 13Ω	BR1K5W013	4	2 parallel, 2 in series	59	12.7	60	45.6
VFD450CH43L-00	60	45	30.5	-	6000W 13Ω	BR1K5W013	4	2 parallel, 2 in series	59	12.7	60	45.6
VFD550CH43A-00 VFD550CH43A-21	75	55	37.2	4030*2	8000W 10.2Ω	BR1K0W5P1	4	4 in series	76	9.5	80	60.8
VFD550CH43L-00	75	55	37.2	-	8000W 10.2Ω	BR1K0W5P1	4	4 in series	76	9.5	80	60.8
VFD750CH43A-00 VFD750CH43A-21	100	75	50.8	4045*2	9600W 7.5Ω	BR1K2W015	4	2 parallel, 2 in series	100	6.3	120	91.2
VFD750CH43L-00	100	75	50.8	-	9600W 7.5Ω	BR1K2W015	4	2 parallel, 2 in series	100	6.3	120	91.2
VFD900CH43A-00 VFD900CH43A-21	125	90	60.9	4045*2	12000W 6.5Ω	BR1K5W013	4	2 parallel, 2 in series	117	6.3	120	91.2
VFD1100CH43A-00 VFD1100CH43A-21	150	110	74.5	4110*1	12000W 6Ω	BR1K2W015	10	5 parallel, 2 in series	126	6.0	126	95.8
VFD1320CH43A-00 VFD1320CH43A-21	175	132	89.4	4160*1	18000W 4Ω	BR1K5W012	12	6 parallel, 2 in series	190	4.0	190	144.4
VFD1600CH43A-00 VFD1600CH43A-21	215	160	108.3	4160*1	18000W 4Ω	BR1K5W012	12	6 parallel, 2 in series	190	4.0	190	144.4
VFD1850CH43A-00 VFD1850CH43A-21	250	185	125.3	4185*1	21000W 3.4Ω	BR1K5W012	14	7 parallel, 2 in series	225	3.4	225	172.1
VFD2200CH43A-00 VFD2200CH43A-21	300	220	148.9	4110*2	24000W 3Ω	BR1K2W015	10	5 parallel, 2 in series	252	3.0	252	190.5
VFD2800CH43A-00 VFD2800CH43C-21	375	280	189.6	4160*2	36000W 2Ω	BR1K5W012	12	6 parallel, 2 in series	380	2.0	380	288.8
VFD3150CH43A-00 VFD3150CH43C-21	420	315	213.3	4160*2	36000W 2Ω	BR1K5W012	12	6 parallel, 2 in series	380	2.0	380	288.8
VFD3550CH43A-00 VFD3550CH43C-21	475	355	240.3	4185*2	42000W 1.7Ω	BR1K5W012	14	7 parallel, 2 in series	450	1.7	450	342
VFD4500CH43A-00 VFD4500CH43C-21	600	450	304.7	4185*3	54000W 1.3Ω	BR1K5W012	12	6 parallel, 2 in series	600	1.1	675	513

Table 7-2

*1 Calculation for 125% brake toque: (kW) × 125% × 0.8; where 0.8 is motor efficiency.

Since there is a resistor power consumption limit, the longest operation time for 10%ED is 10 seconds (ON: 10 seconds / OFF: 90 seconds).

*2 Refer to <Brake Module and Brake Resistors> in the application manual for "Operation Duration & ED" vs. "Braking Current".

*3 To dissipate heat, mount a resistor of 400 W or lower to a frame to keep the surface temperature below 250°C. Fix a resistor of 1000 W or higher to a surface to keep the surface temperature below 350°C. (If the surface temperature is higher than the temperature limit, install extra cooling or increase the size of the resistor.)

*4 Refer to VFDB series Braking Module Instruction for more details on brake resistor.

NOTE:

1. Specification and Appearance of Brake Resistors

1.1 Wire wound resistors: For 1000 W and above, refer to the following appearance of wire wound resistor (Figure7-1) and its model and specification comparison table (Table 7-5) for details.

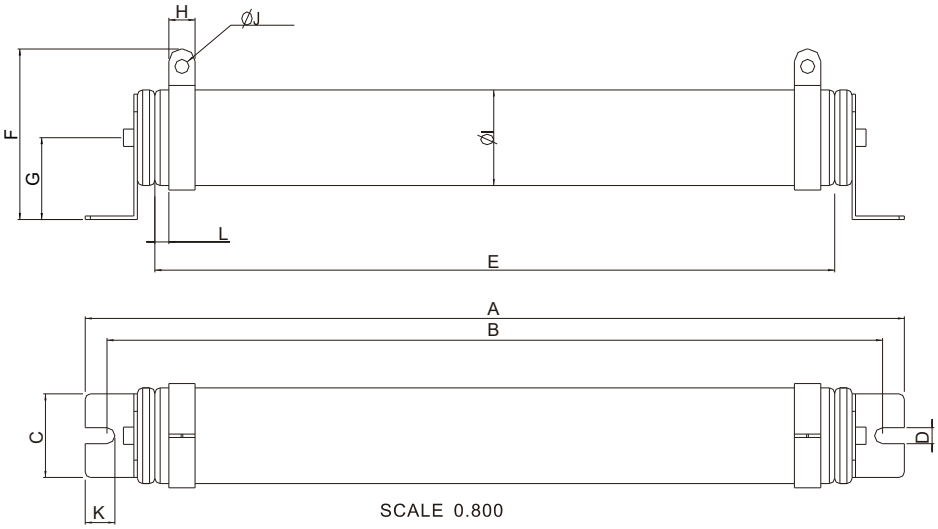

Figure 7-1

Models and Specifications Comparison Table of Wire Wound Resistors: Unit: mm

Model	A	B	C	D	E	F	G	H	ØI	ØJ	K	L
BR1K0W4P3	470±10	445±5	45±0.2	9.1±0.1	390±3	98±5	47±5	15±1	55±5	8.1±0.1	21±0.2	8±1
BR1K0W5P1												
BR1K0W016												
BR1K0W020												
BR1K0W075												
BR1K2W3P9												
BR1K2W015												
BR1K5W3P3												
BR1K5W012												
BR1K5W013												
BR1K5W043												

Table 7-3

1.2 Aluminum housed resistors: For below 1000 W, refer to the following appearance of aluminum-housed resistor (Figure 7-2) and its model and specification comparison table (Table 7-6) for details.

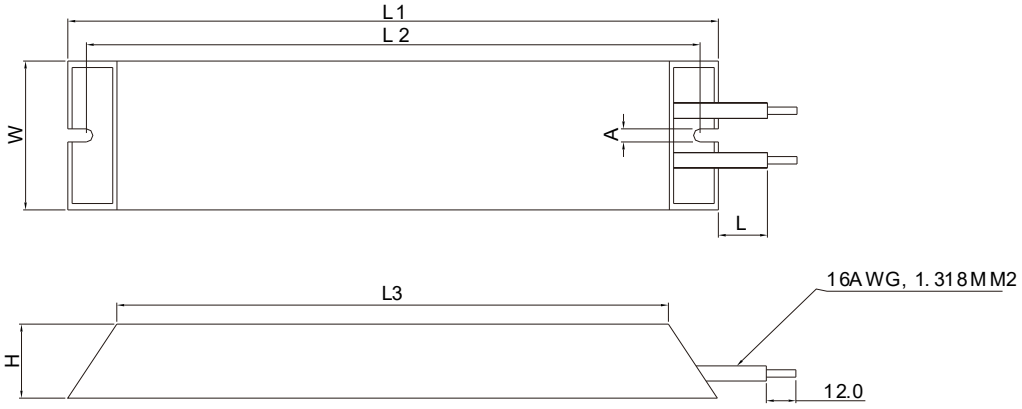

Figure 7-2

Unit: mm

Model	L1	L2	L3	W	H	A	L
BR080W200	470±2	125±2	100±1	40±0.5	20±0.5	5.3±0.5	200±20
BR080W750							
BR200W091	165±2	150±2	125±1	60±0.5	30±0.5		
BR200W360							
BR300W070	215±2	200±2	175±1				
BR300W250							
BR400W040	265±2	250±2	225±1				
BR400W150							

Table 7-4

2. Select the resistance value, power and brake usage (ED %) according to Delta rules.

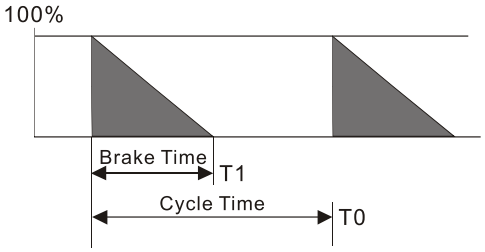

ED% = T1 / T0 x 100(%)

Explanation:
Brake usage ED (%) is the amount of time needed for the brake unit and brake resistor to dissipate heat generated by braking. When the brake resistor heats up, the resistance increases with temperature, and braking torque decreases accordingly.

Figure 7-3

For safety, install a thermal overload relay between the brake unit and the brake resistor in conjunction with the magnetic contactor (MC) at the drive mains input for additional protection. The thermal overload relay protects the brake resistor from overheat damage due to frequent or continuous braking. Under such circumstances, turn off the power to prevent damage to the brake resistor, brake unit and the drive.
NOTE: Never use it to disconnect the brake resistor.

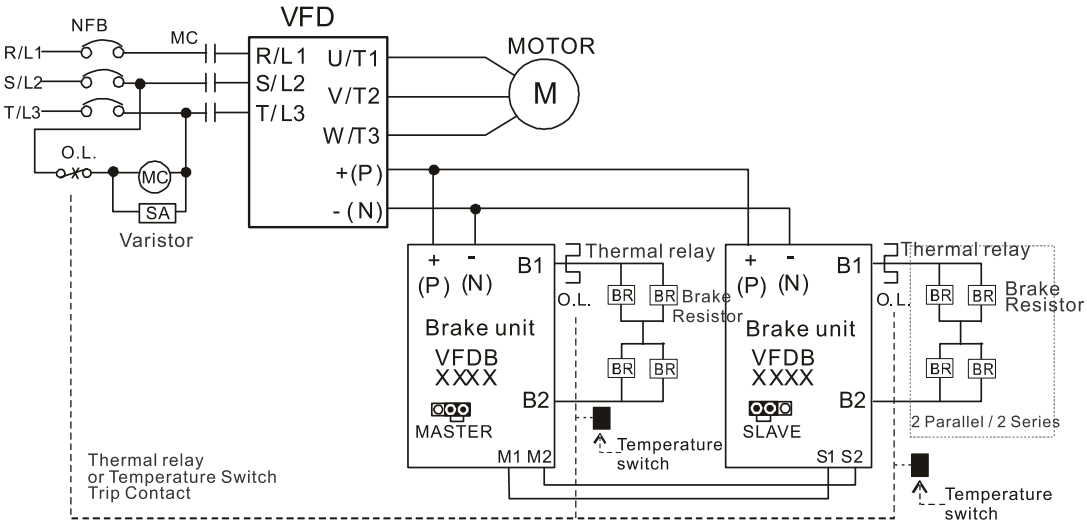

- When AC Drive is equipped with a DC reactor, please read user manual for the correct wiring for the brake unit input circuit +(P).
- DO NOT connect input circuit -(N) to the neutral point of the power system.

Figure 7-4

3. Any damage to the drive or other equipment caused by using brake resistors and brake units that are not provided by Delta voids the warranty.
4. Consider environmental safety factors when installing the brake resistors. If you use the minimum resistance value, consult your local dealers for the power calculation.
5. When using more than two brake units, the equivalent resistor value of the parallel brake unit cannot be less than the value in the column “Min. Resistor Value [Ω]” (the right-most column in the table). Install the brake unit vertically and leaves 150 mm (5.91 in.) of heat dissipation space on the top and the bottom of the brake unit. Read the wiring information in the brake unit user manual thoroughly prior to operation. Visit the following links to get the instruction sheets for the wiring in the brake unit:
   - VFDB2015 / 2022 / 4030 / 4045 / 5055 Braking Modules Instruction Sheet
     http://www.deltaww.com/filecenter/Products/download/06/060101/Option/DELTA_IA-MDS_VFDB_I_EN_20070719.pdf
   - VFDB4110 / 4160 / 4185 Braking Modules Instruction Sheet
     http://www.deltaww.com/filecenter/Products/download/06/060101/Option/DELTA_IA-MDS_VFDB4110-4160-4185_I_EN_20101011.pdf
   - VFDB6055 / 6110 / 6160 / 6200 Braking Modules Instruction Sheet
     http://www.deltaww.com/filecenter/Products/download/06/060101/Option/DELTA_IA-MDS_VFDB6055-6110-6160-6200_I_TSE_20121030.pdf
6. The selection tables are for normal usage. If the AC motor drive requires frequent braking, increase the Watts by two to three times.

7. Thermal Overload Relay (TOR):

Thermal overload relay selection is based on its overload capability. A standard braking capacity of the CH2000 is 10% ED (Tripping time = 10s). As shown in the graph below, a 460V, 110 kW CH2000 requires the thermal relay to take 260% overload capacity for 10 seconds (hot starting) and the braking current is 126 A. In this case, select a thermal overload relay rated at 50 A. The specification of each thermal relay may vary among different manufacturers. Carefully read the specification before using it.

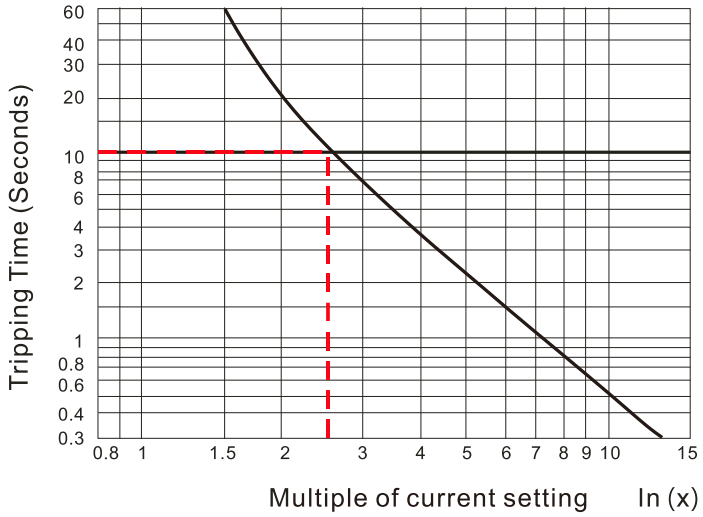

Figure 7-5

7-2 Magnetic Contactor / Air Circuit Breaker and Non-fuse Circuit Breaker

Magnetic Contactor (MC) and Air Circuit Breaker (ACB)

It is recommended the surrounding temperature for MC should be ≥ 60°C and that for ACB should be ≥ 50°C. In the meanwhile, consider temperature derating for components with ON / OFF switch in accordance with the ambient temperature of the on-site distribution panel.

230V Model

Frame	Model	Super Heavy Duty Output Current (A)	Super Heavy Duty Input Current (A)	MC/ACB Selection (A)
A	VFD007CH23A-21	5	6.4	11
	VFD015CH23A-21	8	12	22
	VFD022CH23A-21	11	16	32
	VFD037CH23A-21	17	20	32
B	VFD055CH23A-21	25	28	55
	VFD075CH23A-21	33	36	65
	VFD110CH23A-21	49	52	85
C	VFD150CH23A-21	65	72	130
	VFD185CH23A-21	75	83	150
D	VFD220CH23A-00 VFD220CH23A-21	90	99	150
	VFD300CH23A-00 VFD300CH23A-21	120	124	185
	VFD370CH23A-00 VFD370CH23A-21	146	143	225
E	VFD450CH23A-00 VFD450CH23A-21	180	171	265
	VFD550CH23A-00 VFD550CH23A-21	215	206	330
F	VFD750CH23A-00 VFD750CH23A-21	255	245	400

Table 7-5

460V Model

Frame	Model	Super Heavy Duty Output Current (A)	Super Heavy Duty Input Current (A)	MC/ACB Selection (A)
A	VFD007CH43A-21	3	4.3	7
	VFD015CH43A-21	4	5.9	9
	VFD022CH43A-21	6	8.7	18
	VFD037CH43A-21	9	14	22
	VFD055CH43A-21	12	17	32
B	VFD075CH43A-21	18	20	32
	VFD110CH43A-21	24	26	40
	VFD150CH43A-21	32	35	55
C	VFD185CH43A-21	38	40	65
	VFD220CH43A-21	45	47	75
	VFD300CH43A-21	60	63	105

Frame	Model	Super Heavy Duty Output Current (A)	Super Heavy Duty Input Current (A)	MC/ACB Selection (A)
D0	VFD370CH43S-00 VFD370CH43S-21 VFD370CH43L-00	73	74	130
D	VFD450CH43A-00 VFD450CH43A-21 VFD450CH43L-00	91	101	150
	VFD550CH43A-00 VFD550CH43A-21 VFD550CH43L-00	110	114	185
	VFD750CH43A-00 VFD750CH43A-21 VFD750CH43L-00	150	157	265
E	VFD900CH43A-00 VFD900CH43A-21	180	167	265
	VFD1100CH43A-00 VFD1100CH43A-21	220	207	330
F	VFD1320CH43A-00 VFD1320CH43A-21	250	240	400
G	VFD1600CH43A-00 VFD1600CH43A-21	310	300	500
	VFD1850CH43A-00 VFD1850CH43A-21	370	380	630
	VFD2200CH43A-00 VFD2200CH43A-21	450	400	630
H	VFD2800CH43A-00 VFD2800CH43C-21	550	494	800
	VFD3150CH43A-00 VFD3150CH43C-21	616	555	800
	VFD3550CH43A-00 VFD3550CH43C-21	683	625	1000
	VFD4500CH43A-00 VFD4500CH43C-21	866	866	1600

Table 7-6

Non-fuse Circuit Breaker

Comply with the UL standard: Per UL 508, paragraph 45.8.4, part a.

The rated current of the non-fuse circuit breaker should be 1.5–3 times the drive's rated input current.

Three-phase 230V	
Model	Breaker Rated Input Recommended Current (A)
VFD007CH23A-21	15
VFD015CH23A-21	20
VFD022CH23A-21	30
VFD037CH23A-21	40
VFD055CH23A-21	50
VFD075CH23A-21	60
VFD110CH23A-21	100
VFD150CH23A-21	125
VFD185CH23A-21	150
VFD220CH23A-00 VFD220CH23A-21	200
VFD300CH23A-00 VFD300CH23A-21	225
VFD370CH23A-00 VFD370CH23A-21	250
VFD450CH23A-00 VFD450CH23A-21	300
VFD550CH23A-00 VFD550CH23A-21	400
VFD750CH23A-00 VFD750CH23A-21	450

Table 7-7

Three-phase 460V	
Model	Breaker Rated Input Recommended Current (A)
VFD007CH43A-21	5
VFD015CH43A-21	10
VFD022CH43A-21	15
VFD037CH43A-21	20
VFD055CH43A-21	30
VFD075CH43A-21	40
VFD110CH43A-21	50
VFD150CH43A-21	60
VFD185CH43A-21	75
VFD220CH43A-21	100
VFD300CH43A-21	125
VFD370CH43S-00 VFD370CH43S-21 VFD370CH43L-00	150
VFD450CH43A-00 VFD450CH43A-21 VFD450CH43L-00	175
VFD550CH43A-00 VFD550CH43A-21 VFD550CH43L-00	250
VFD750CH43A-00 VFD750CH43A-21 VFD750CH43L-00	300
VFD900CH43A-00 VFD900CH43A-21	300
VFD1100CH43A-00 VFD1100CH43A-21	400
VFD1320CH43A-00 VFD1320CH43A-21	500
VFD1600CH43A-00 VFD1600CH43A-21	600
VFD1850CH43A-00 VFD1850CH43A-21	600
VFD2200CH43A-00 VFD2200CH43A-21	800
VFD2800CH43A-00 VFD2800CH43C-21	1000
VFD3150CH43A-00 VFD3150CH43C-21	1200
VFD3550CH43A-00 VFD3550CH43C-21	1350
VFD4500CH43A-00 VFD4500CH43C-21	1600

Table 7-8

7-3 Fuse Specification Chart

☑ Fuse specifications lower than the table below are allowed.

☑ For installation in the United States, branch circuit protection must be provided in accordance with the National Electrical Code (NEC) and any applicable local codes. Use UL classified fuses to fulfill this requirement.

☑ For installation in Canada, branch circuit protection must be provided in accordance with Canadian Electrical Code and any applicable provincial codes. Use UL classified fuses to fulfill this requirement.

230V Model	Input Current I (A)	Line Fuse	
	Heavy Duty	I (A)	Bussmann P/N
VFD007CH23A-21	6.4	15	JJN-15
VFD015CH23A-21	12	25	JJN-20
VFD022CH23A-21	16	35	JJN-30
VFD037CH23A-21	20	45	JJN-50
VFD055CH23A-21	28	60	JJN-50
VFD075CH23A-21	36	80	JJN-60
VFD110CH23A-21	52	110	JJN-110
VFD150CH23A-21	72	150	JJN-125
VFD185CH23A-21	83	175	JJN-150
VFD220CH23A-00 VFD220CH23A-21	99	225	JJN-200
VFD300CH23A-00 VFD300CH23A-21	124	250	JJN-225
VFD370CH23A-00 VFD370CH23A-21	143	300	JJN-300
VFD450CH23A-00 VFD450CH23A-21	171	400	JJN-300
VFD550CH23A-00 VFD550CH23A-21	206	450	JJN-400
VFD750CH23A-00 VFD750CH23A-21	245	500	JJN-500

Table 7-9

460V Model	Input Current I (A)	Line Fuse	
	Heavy Duty	I (A)	Heavy Duty
VFD007CH43A-21 VFD007CH4EA-21	4.3	10	JJS-10
VFD015CH43A-21 VFD015CH4EA-21	5.9	10	JJS-10
VFD022CH43A-21 VFD022CH4EA-21	8.7	15	JJS-15
VFD037CH43A-21 VFD037CH4EA-21	14	20	JJS-20
VFD055CH43A-21 VFD055CH4EA-21	17	40	JJS-40

460V Model	Input Current I (A)	Line Fuse	
	Heavy Duty	I (A)	Heavy Duty
VFD075CH43A-21 VFD075CH4EA-21	20	50	JJS-40
VFD110CH43A-21 VFD110CH4EA-21	26	10	JJS-50
VFD150CH43A-21 VFD150CH4EA-21	35	80	JJS-80
VFD185CH43A-21 VFD185CH4EA-21	40	90	JJS-90
VFD220CH43A-21 VFD220CH4EA-21	47	110	JJS-110
VFD300CH43A-21 VFD300CH4EA-21	63	150	JJS-150
VFD370CH43S-00 VFD370CH43S-21 VFD370CH43L-00	74	150	JJS-150
VFD450CH43A-00 VFD450CH43A-21 VFD450CH43L-00	101	175	JJS-175
VFD550CH43A-00 VFD550CH43A-21 VFD550CH43L-00	114	250	JJS-250
VFD750CH43A-00 VFD750CH43A-21 VFD750CH43L-00	157	300	JJS-300
VFD900CH43A-00 VFD900CH43A-21	167	300	JJS-300
VFD1100CH43A-00 VFD1100CH43A-21	207	400	JJS-400
VFD1320CH43A-00 VFD1320CH43A-21	240	500	JJS-500
VFD1600CH43A-00 VFD1600CH43A-21	300	600	JJS-600
VFD1850CH43A-00 VFD1850CH43A-21	380	600	JJS-600
VFD2200CH43A-00 VFD2200CH43A-21	400	800	JJS-800
VFD2800CH43A-00 VFD2800CH43C-21	494	1000	KTU-1000
VFD3150CH43A-00 VFD3150CH43C-21	616	1200	KTU-1200
VFD3550CH43A-00 VFD3550CH43C-21	683	1400	KTU-1400
VFD4500CH43A-00 VFD4500CH43C-21	866	1600	170M6019

Table 7-10

7-4 AC / DC Reactor

AC Input Reactor

Installing an AC reactor on the input side of an AC motor drive can increase line impedance, improve the power factor, reduce input current, increase system capacity, and reduce interference generated from the motor drive. It also reduces momentary voltage surges or abnormal current spikes from the mains power, further protecting the drive. For example, when the main power capacity is higher than 500 kVA, or when using a phase-compensation capacitor, momentary voltage and current spikes may damage the AC motor drive's internal circuit. An AC reactor on the input side of the AC motor drive protects it by suppressing surges.

Installation

Install an AC input reactor in series between the main power and the three input phases R S T, as shown in the figure below:

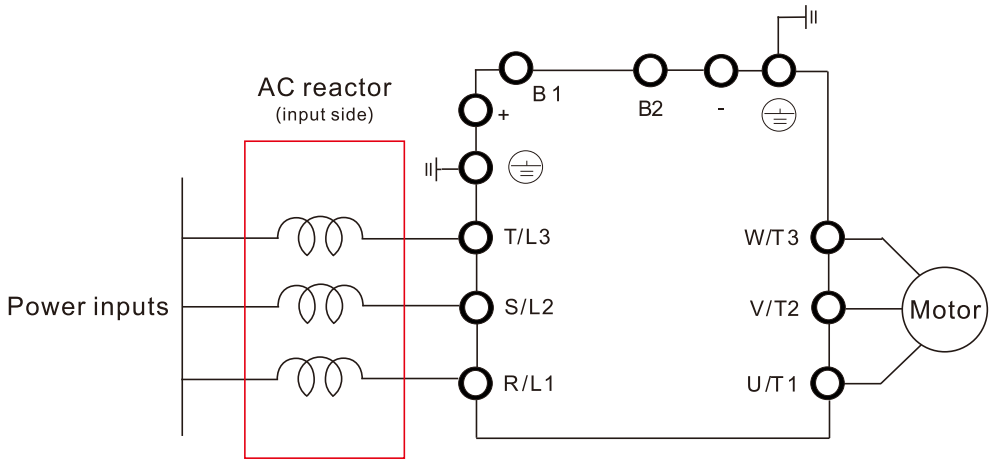

Figure 7-6 Wiring of AC Input Reactor

Applicable Reactors

200–230V, 50 / 60 Hz Super Heavy Duty

Model	HP	Rated Current (Arms)	Saturation Current (Arms)	3% Impedance (mH)	5% Impedance (mH)	Built-in DC Reactor	Input AC Reactor Delta Part #	Weight (kg)
VFD007CH23A-21	1	5	10	2.536	4.227	No	DR005A0254	1.2
VFD015CH23A-21	2	8	16	1.585	2.642	No	DR008A0159	1.7
VFD022CH23A-21	3	11	22	1.152	1.922	No	DR011A0115	2.5
VFD037CH23A-21	5	17	34	0.746	1.243	No	DR017AP746	3.2
VFD055CH23A-21	7.5	25	50	0.507	0.845	No	DR025AP507	3.8
VFD075CH23A-21	10	33	66	0.32	0.534	No	DR033AP320	4.5
VFD110CH23A-21	15	49	98	0.216	0.359	No	DR049AP215	6.5
VFD150CH23A-21	20	65	130	0.163	0.271	No	DR065AP162	8.5
VFD185CH23A-21	25	75	150	0.169	0.282	No	DR075AP170	10
VFD220CH23A-21	30	90	180	0.141	0.235	No	DR090AP141	11.5
VFD300CH23A-00 VFD300CH23A-21	40	120	240	0.106	0.176	Yes	DR146AP087	22

Model	HP	Rated Current (Arms)	Saturation Current (Arms)	3% Impedance (mH)	5% Impedance (mH)	Built-in DC Reactor	Input AC Reactor Delta Part #	Weight (kg)
VFD370CH23A-00 VFD370CH23A-21	50	146	292	0.087	0.145	Yes	DR146AP087	22
VFD450CH23A-00 VFD450CH23A-21	60	180	360	0.070	0.117	Yes	DR180AP070	26
VFD550CH23A-00 VFD550CH23A-21	75	215	430	0.059	0.098	Yes	DR215AP059	30
VFD750CH23A-00 VFD750CH23A-21	100	255	510	0.049	0.083	Yes	DR276AP049	37

Table 7-11

380–460V, 50 / 60 Hz Super Heavy Duty

Model	HP	Rated Current (Arms)	Saturation Current (Arms)	3% Impedance (mH)	5% Impedance (mH)	Built-in DC Reactor	Input AC Reactor Delta Part #	Weight (kg)
VFD007CH43A-21 VFD007CH4EA-21	1	3	6	8.102	13.502	No	DR003A0810	1.5
VFD015CH43A-21 VFD015CH4EA-21	2	4	8	6.077	10.127	No	DR004A0607	1.8
VFD022CH43A-21 VFD022CH4EA-21	3	6	12	4.050	6.752	No	DR006A0405	2.8
VFD037CH43A-21 VFD037CH4EA-21	5	9	18	2.700	4.501	No	DR009A0270	3.5
VFD040CH43A-21 VFD040CH4EA-21	5	10.5	21	2.315	3.858	No	DR010A0231	4.5
VFD055CH43A-21 VFD055CH4EA-21	7.5	12	24	2.025	3.375	No	DR012A0202	4.8
VFD075CH43A-21 VFD075CH4EA-21	10	18	36	1.174	1.957	No	DR018A0117	5.3
VFD110CH43A-21 VFD110CH4EA-21	15	24	48	0.881	1.468	No	DR024AP881	5.8
VFD150CH43A-21 VFD150CH4EA-21	20	32	64	0.66	1.101	No	DR032AP660	9
VFD185CH43A-21 VFD185CH4EA-21	25	38	76	0.639	1.066	No	DR038AP639	9.5
VFD220CH43A-21 VFD220CH4EA-21	30	45	90	0.541	0.900	No	DR045AP541	10.5
VFD300CH43A-21 VFD300CH4EA-21	40	60	120	0.405	0.675	No	DR060AP405	11.5
VFD370CH43S-00 VFD370CH43S-21 VFD370CH43L-00	50	73	146	0.334	0.555	Yes	DR073AP334	25
VFD450CH43A-00 VFD450CH43A-21 VFD450CH43L-00	60	91	182	0.267	0.445	Yes	DR091AP267	25
VFD550CH43A-00 VFD550CH43A-21 VFD550CH43L-00	75	110	220	0.221	0.368	Yes	DR110AP221	28
VFD750CH43A-00 VFD750CH43A-21 VFD750CH43L-00	100	150	300	0.162	0.270	Yes	DR150AP162	35
VFD900CH43A-00 VFD900CH43A-21	125	180	360	0.135	0.225	Yes	DR180AP135	42
VFD1100CH43A-00 VFD1100CH43A-21	150	220	440	0.110	0.184	Yes	DR220AP110	45
VFD1320CH43A-00 VFD1320CH43A-21	175	260	500	0.098	0.162	Yes	DR260AP098	55
VFD1600CH43A-00 VFD1600CH43A-21	215	310	620	0.078	0.131	Yes	DR310AP078	60

Model	HP	Rated Current (Arms)	Saturation Current (Arms)	3% Impedance (mH)	5% Impedance (mH)	Built-in DC Reactor	Input AC Reactor Delta Part #	Weight (kg)
VFD1850CH43A-00 VFD1850CH43A-21	250	370	740	0.066	0.109	Yes	DR370AP066	75
VFD2200CH43A-00 VFD2200CH43A-21	300	460	900	0.054	0.090	Yes	DR460AP054	85
VFD2800CH43A-00 VFD2800CH43C-21	375	550	1100	0.044	0.074	Yes	DR550AP044	95
VFD3150CH43A-00 VFD3150CH43C-21	420	616	1232	0.039	0.066	Yes	DR616AP039	110
VFD3550CH43A-00 VFD3550CH43C-21	475	683	1366	0.036	0.06	Yes	DR683AP036	130
VFD4500CH43A-00 VFD4500CH43C-21	600	866	1732	0.028	0.047	Yes	DR866AP028	170

Table 7-12

AC Input Reactor Dimension and Specifications

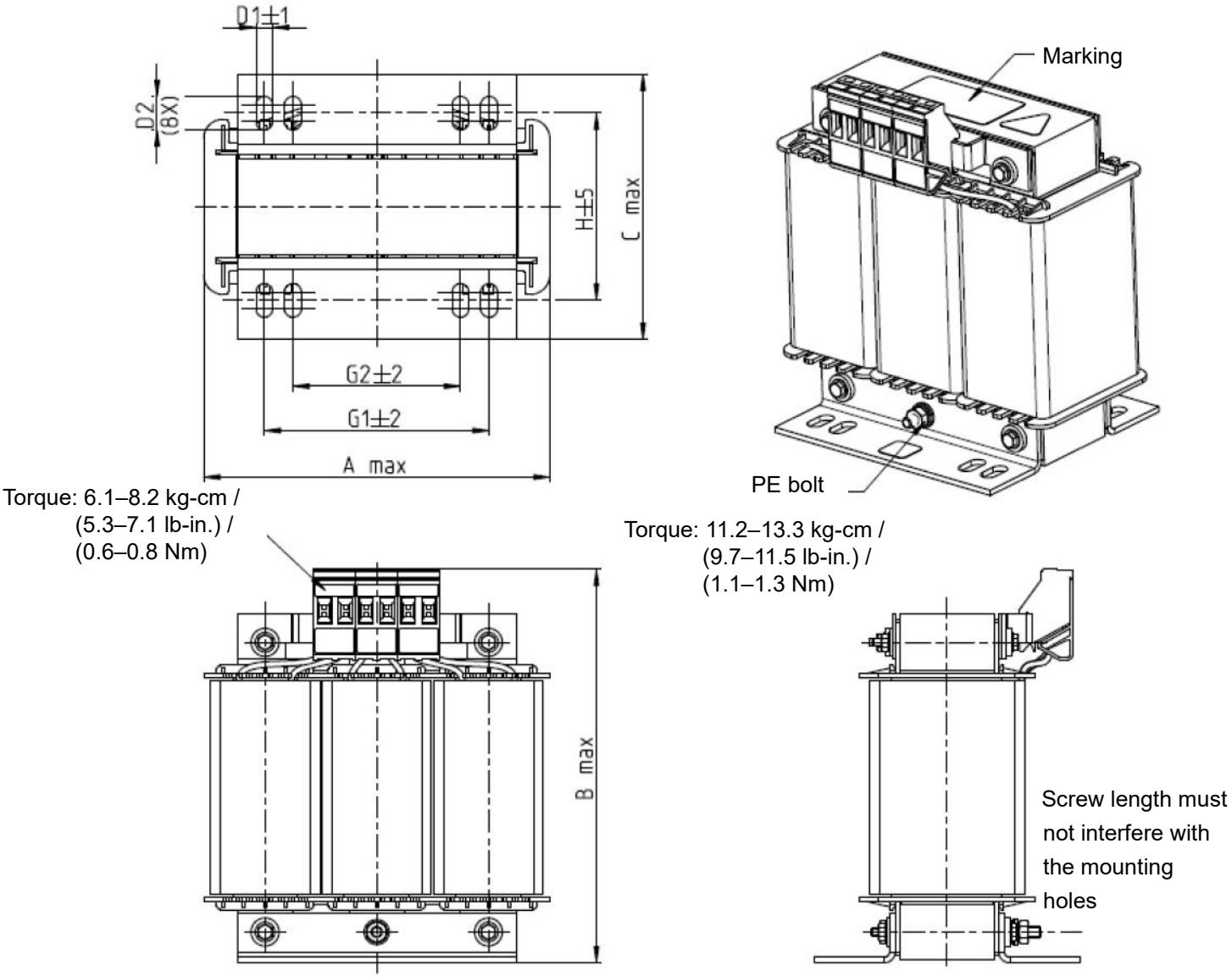

Figure 7-7

Unit: mm

AC Input Reactor Delta Part #	A	B	C	D1*D2	H	G1	G2	PE D
DR005A0254	100	115	65	6*9	45	60	40	M4
DR008A0159	100	115	65	6*9	45	60	40	M4
DR011A0115	130	135	95	6*12	60	80.5	60	M4
DR017AP746	130	135	100	6*12	65	80.5	60	M4

Table 7-13

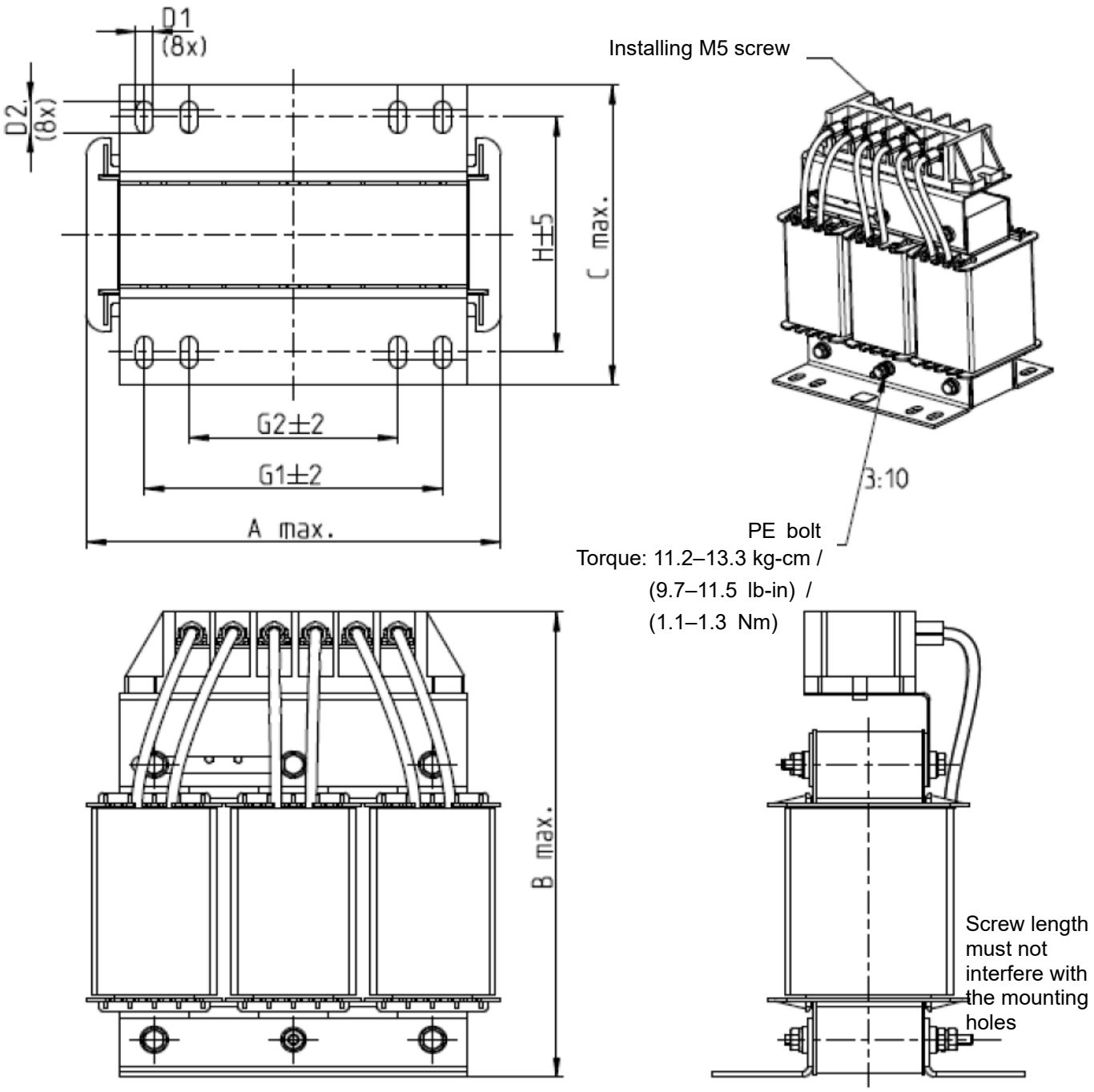

Figure 7-8

Unit: mm

AC Input Reactor Delta Part #	A	B	C	D1*D2	H	G1	G2	PE D
DR025AP507	130	195	100	6*12	65	80.5	60	M4
DR033AP320	130	195	100	6*12	65	80.5	60	M4
DR049AP215	160	200	125	6*12	90	107	75	M4

Table 7-14

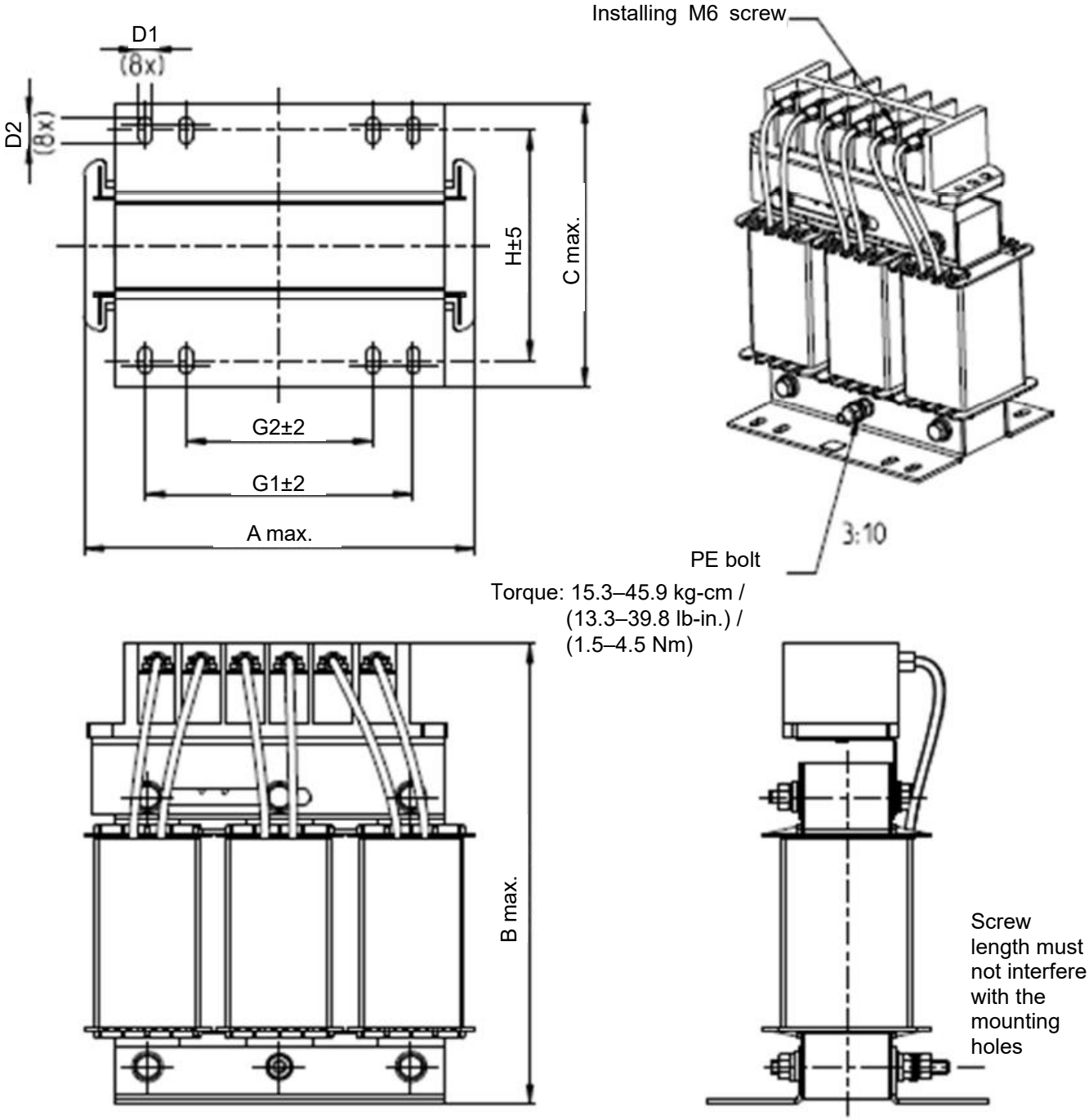

Figure 7-9

Unit: mm

AC Input Reactor Delta Part #	A	B	C	D1*D2	H	G1	G2	PE D
DR065AP162	180	225	135	6*12	104	122	85	M6

Table 7-15

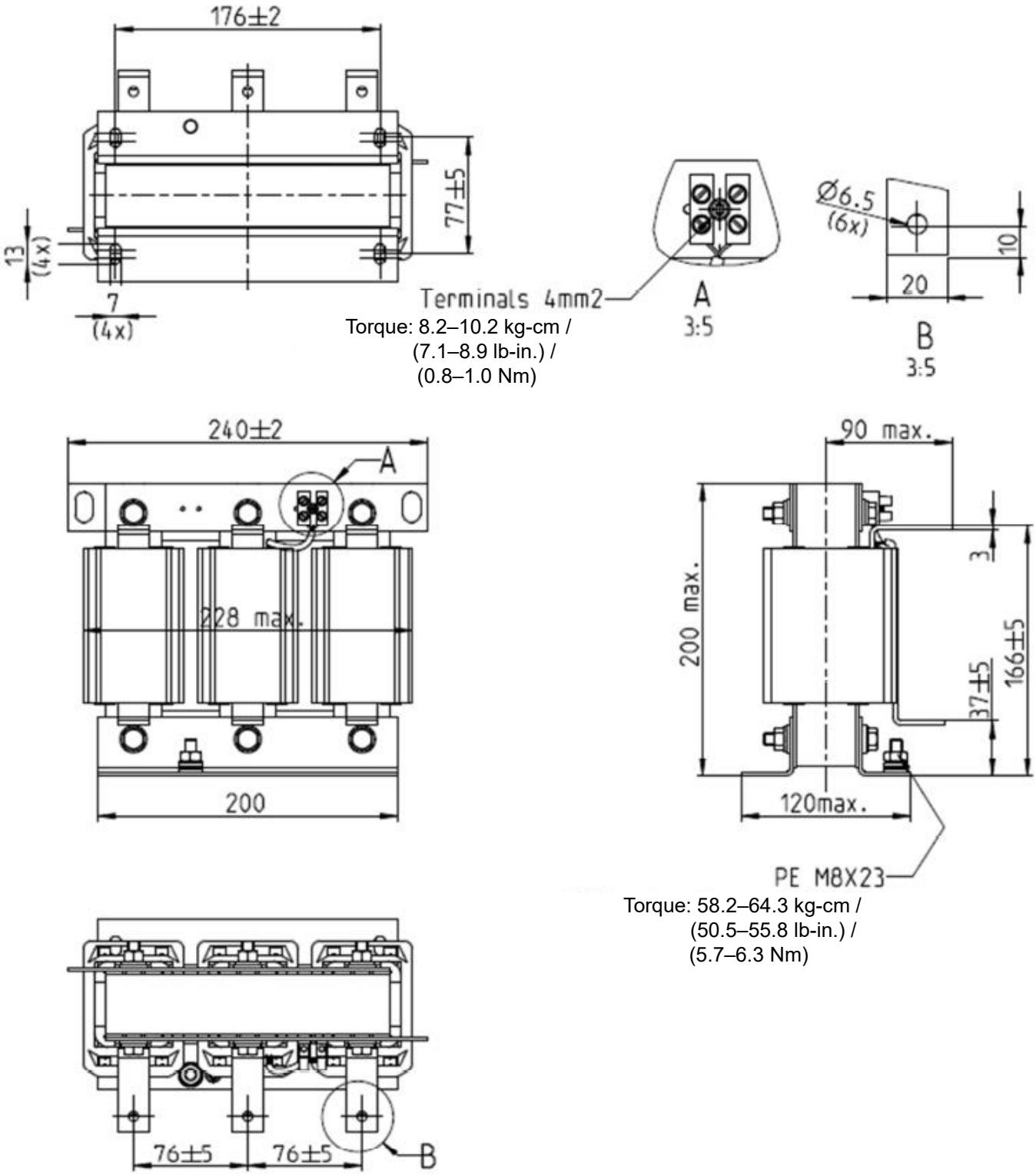

Figure 7-10

Unit: mm

AC Input Reactor Delta Part #	Dimensions
DR075AP170	Dimensions are as shown in the figures above

Table 7-16

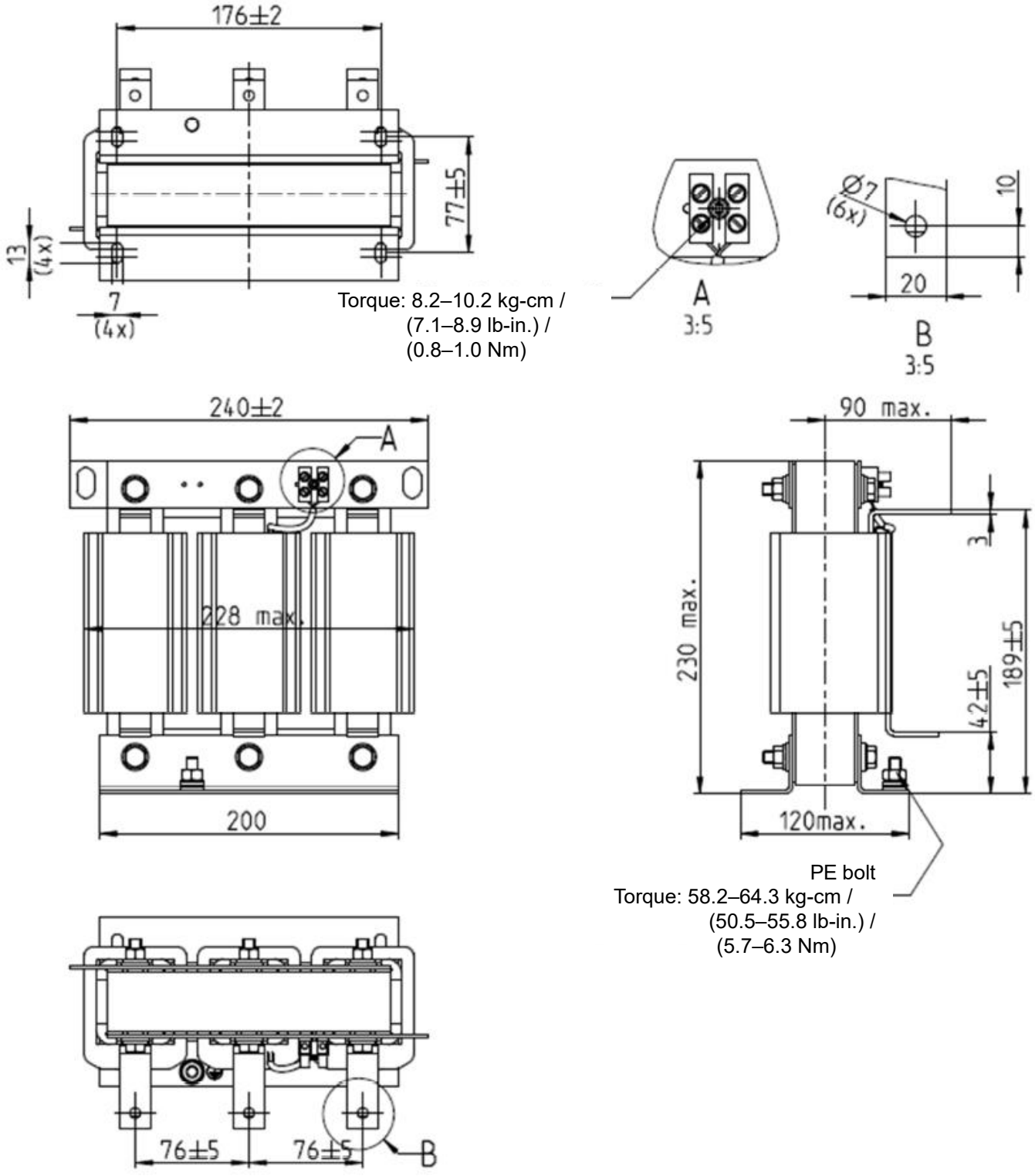

Figure 7-11

Unit: mm

AC Input Reactor Delta Part #	Dimensions
DR090AP141	Dimensions are as shown in the figures above

Table 7-17

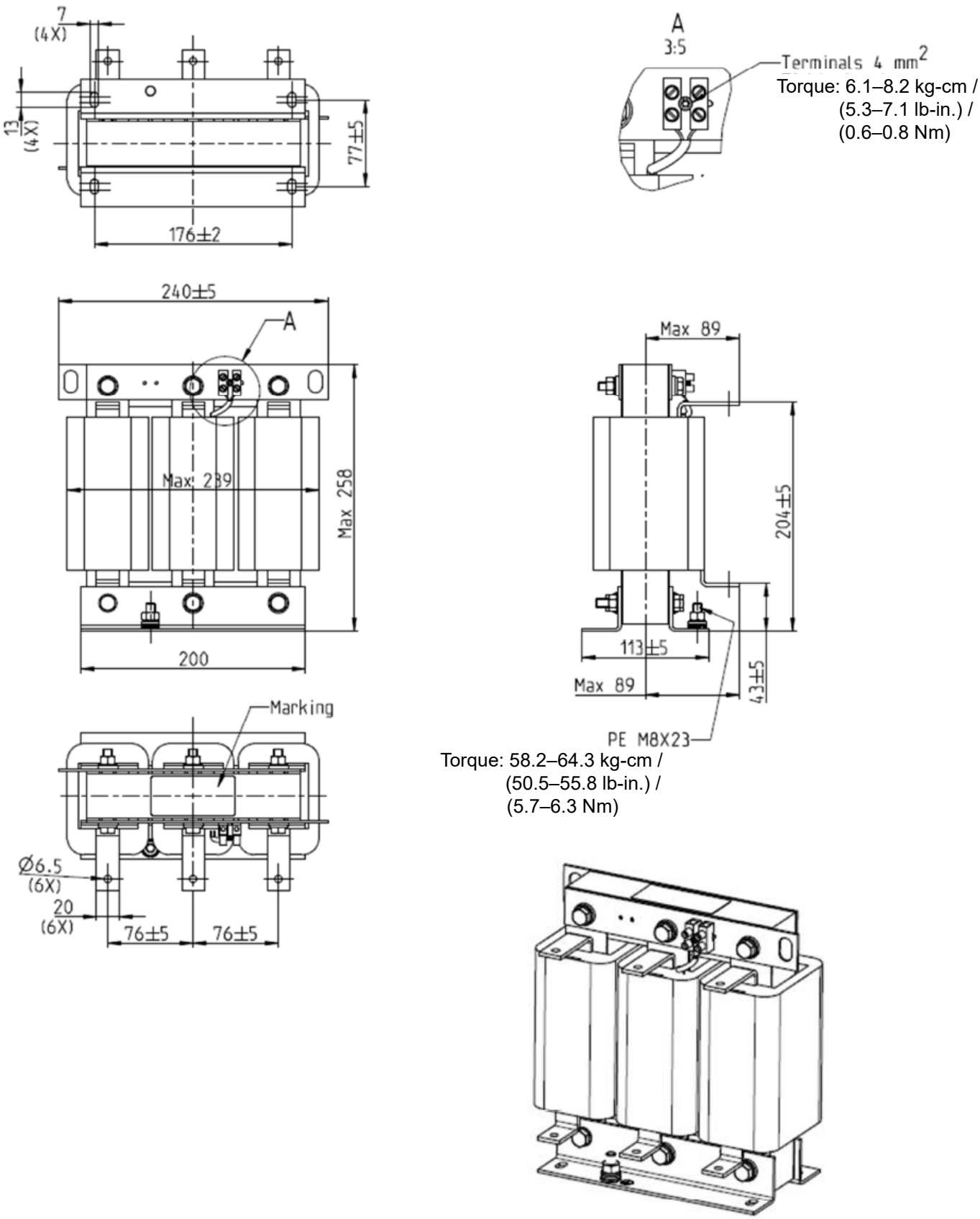

Figure 7-12

Unit: mm

AC Input Reactor Delta Part #	Dimensions
DR146AP087	Dimensions are as shown in the figures above

Table 7-18

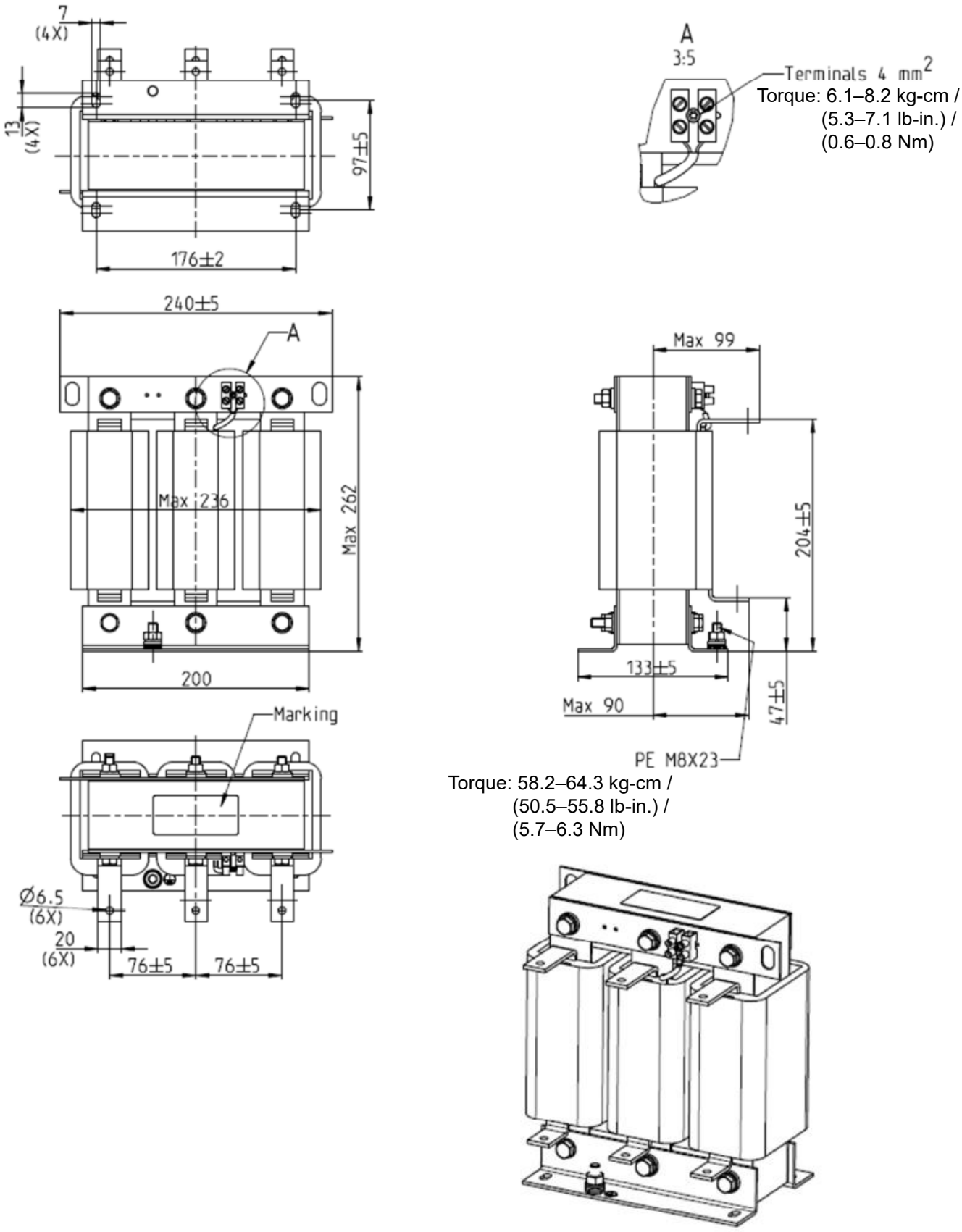

Figure 7-13

Unit: mm

AC Input Reactor Delta Part #	Dimensions
DR180AP070	Dimensions are as shown in the figures above

Table 7-19

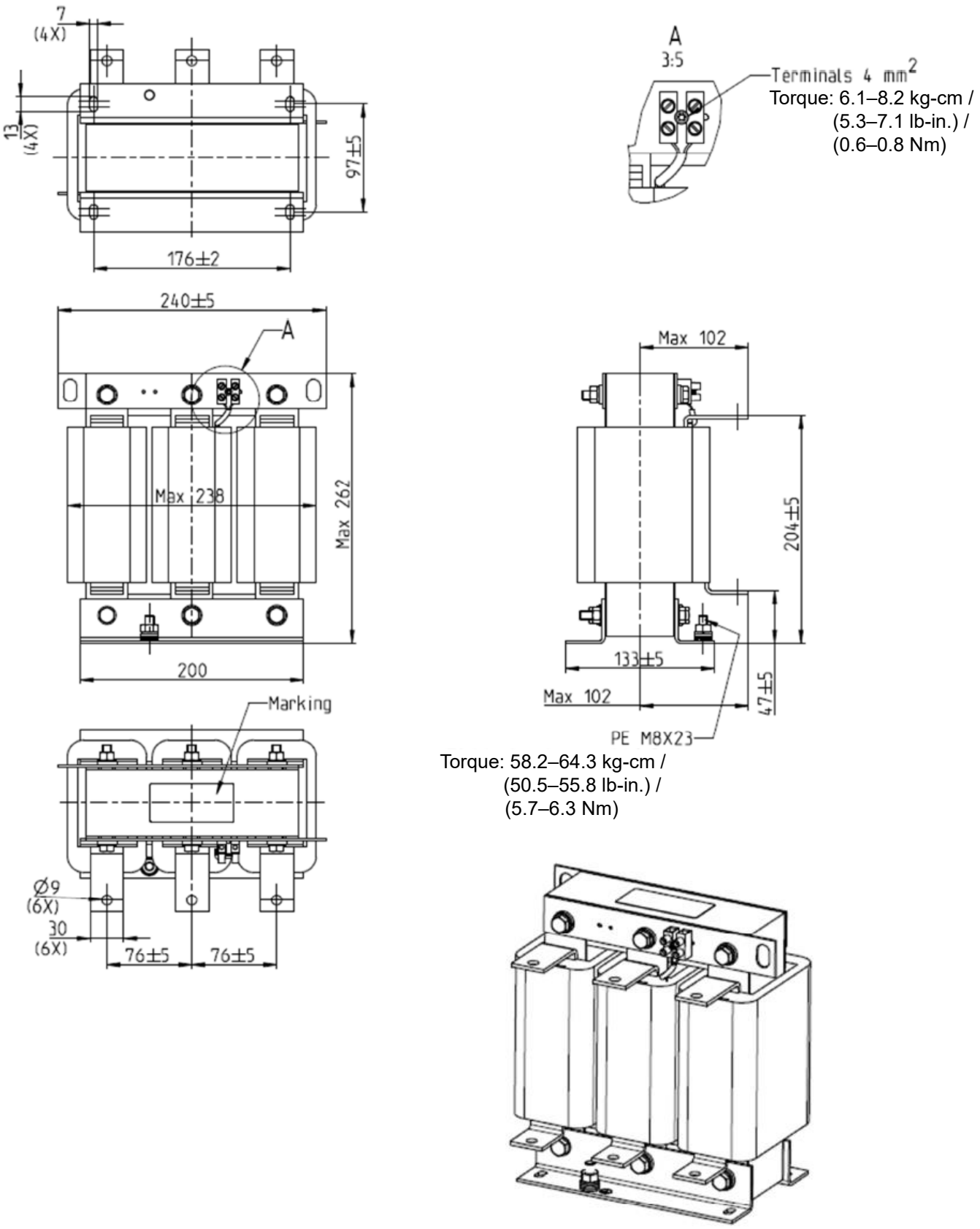

Figure 7-14

Unit: mm

AC Input Reactor Delta Part #	Dimensions
DR215AP059	Dimensions are as shown in the figures above

Table 7-20

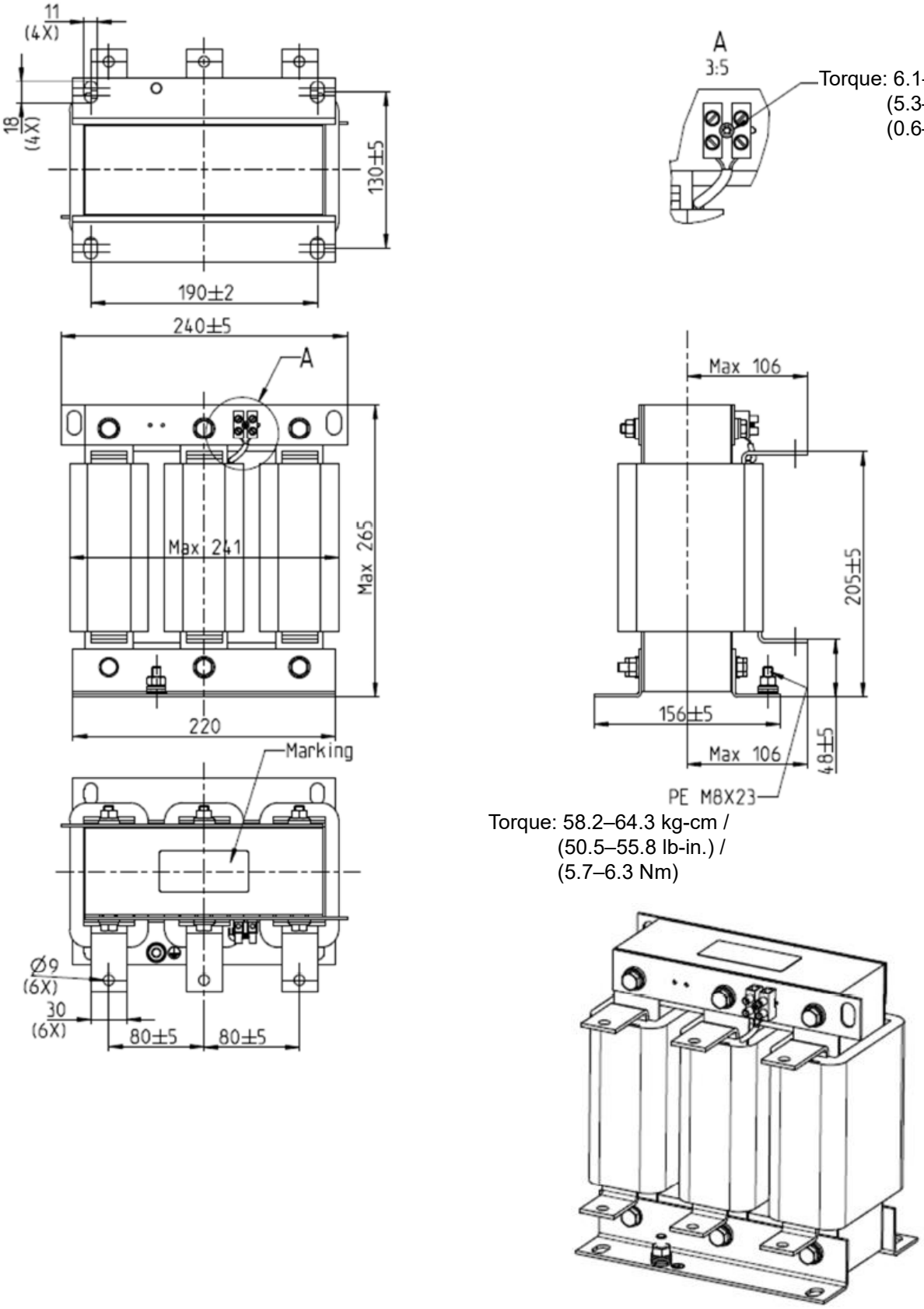

Figure 7-15

Unit: mm

AC Input Reactor Delta Part #	Dimensions
DR276AP049	Dimensions are as shown in the figures above

Table 7-21

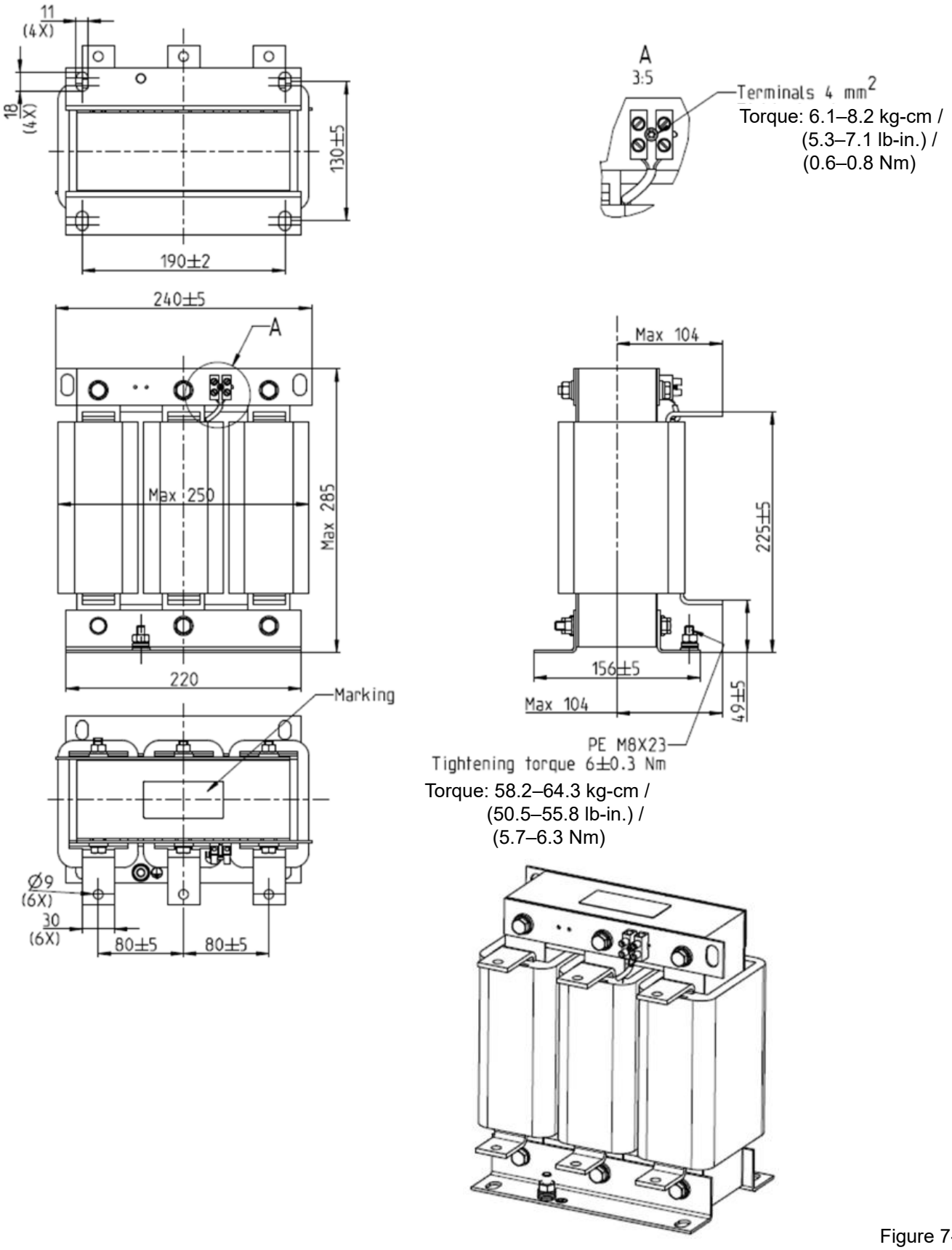

Figure 7-16

Unit: mm

AC Input Reactor Delta Part #	Dimensions
DR346AP037	Dimensions are as shown in the figures above

Table 7-22

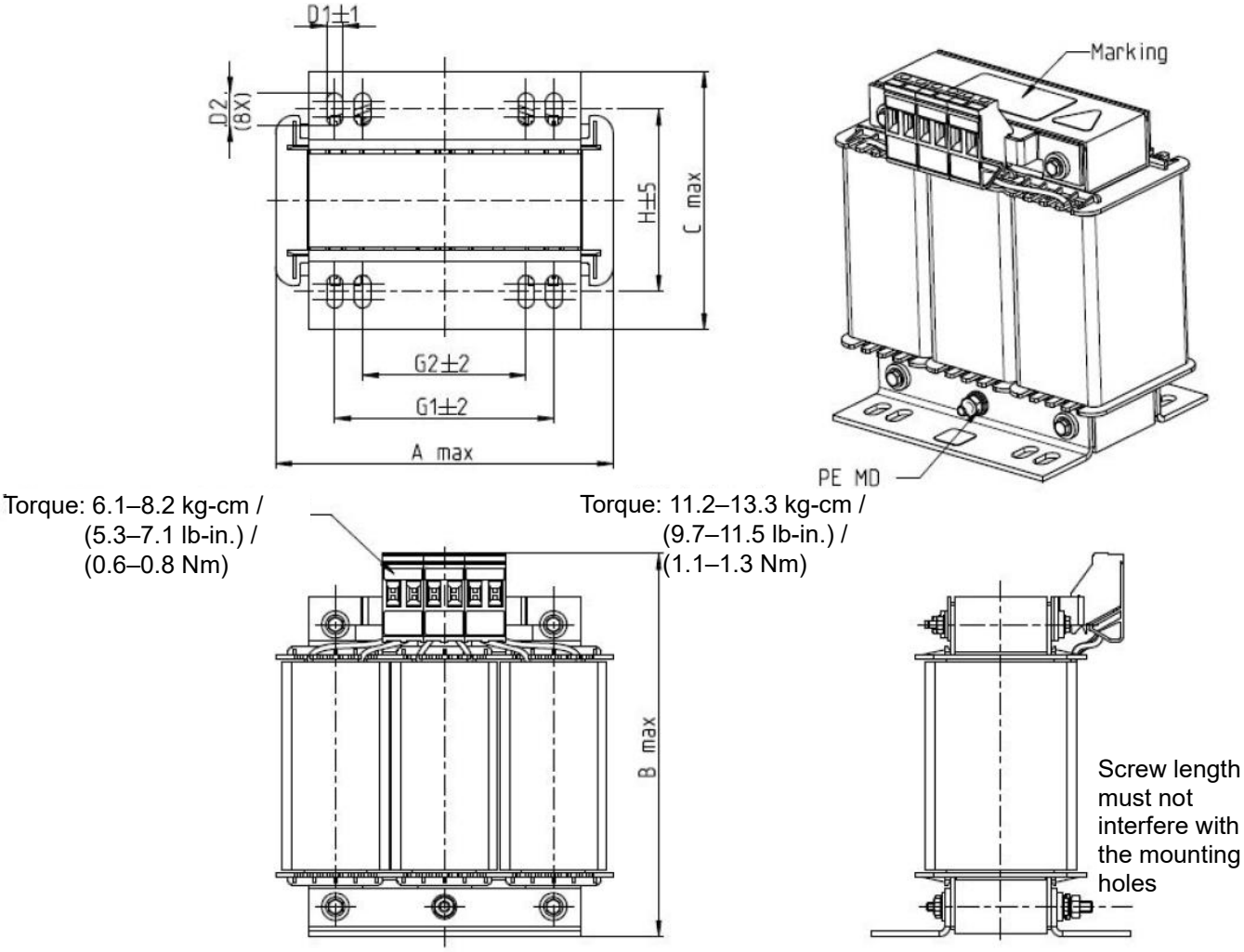

Figure 7-17

Unit: mm

AC Input Reactor Delta Part #	A	B	C	D1*D2	H	G1	G2	PE D
DR003A0810	100	125	65	6*9	43	60	40	M4
DR004A0607	100	125	65	6*9	43	60	40	M4
DR006A0405	130	135	95	6*12	60	80.5	60	M4
DR009A0270	160	160	105	6*12	75	107	75	M4
DR010A0231	160	160	115	6*12	90	107	75	M4
DR012A0202	160	160	115	6*12	90	107	75	M4
DR018A0117	160	160	115	6*12	90	107	75	M4

Table 7-23

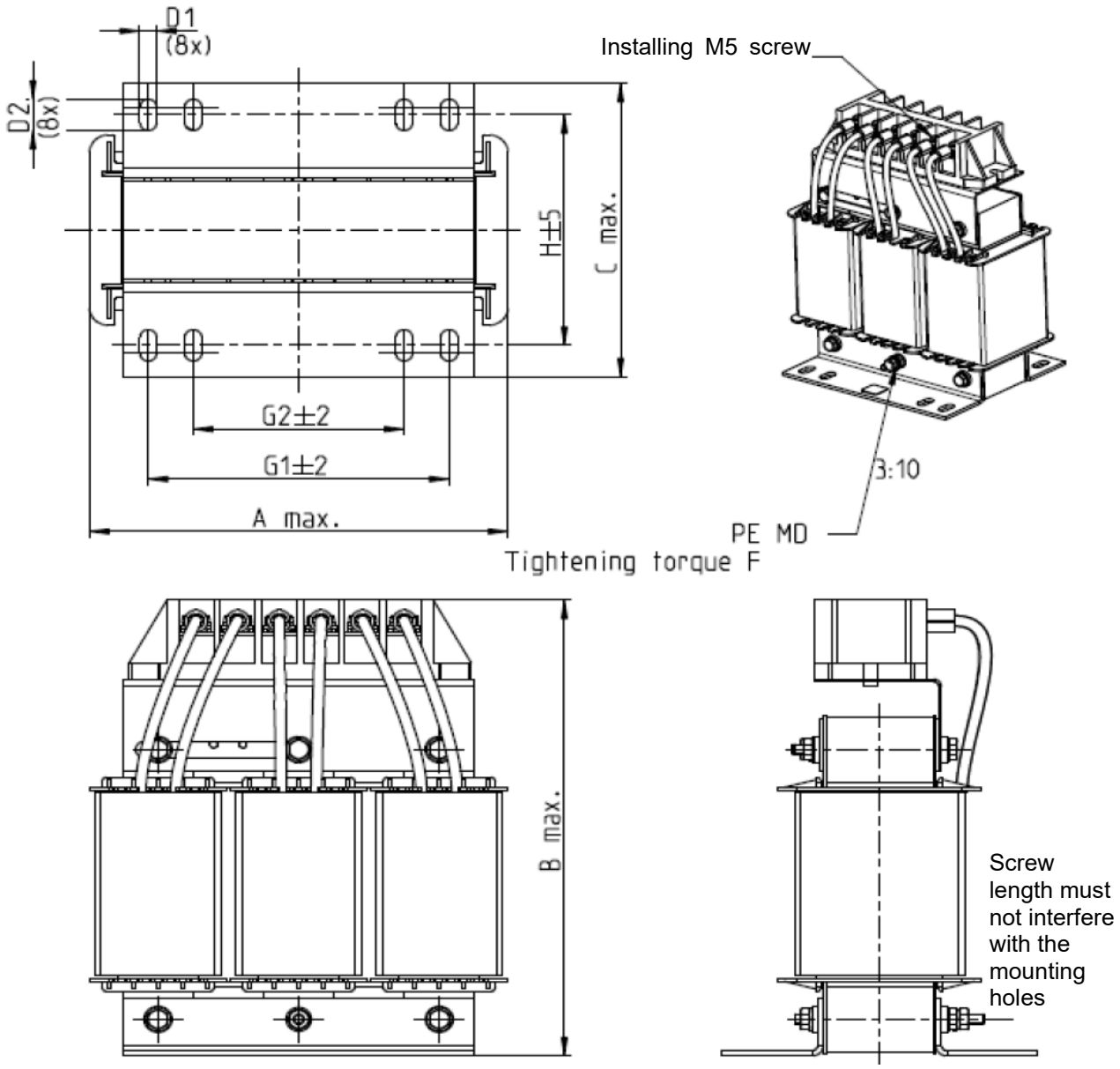

Figure 7-18

Unit: mm

AC Input Reactor Delta Part #	A	B	C	D1*D2	H	G1	G2	PE D	F
DR024AP881	160	175	115	6*12	90	107	75	M4	11.2–13.3 kg-cm / (9.7–11.5 lb-in.) / (1.1–1.3 Nm)
DR032AP660	195	200	145	6*12	115	122	85	M6	29.1–32.1 kg-cm / (25.3–27.9 lb-in.) / (2.85–3.15 Nm)
DR038AP639	190	200	145	6*12	115	122	85	M6	
DR045AP541	190	200	145	6*12	115	122	85	M6	

Table 7-24

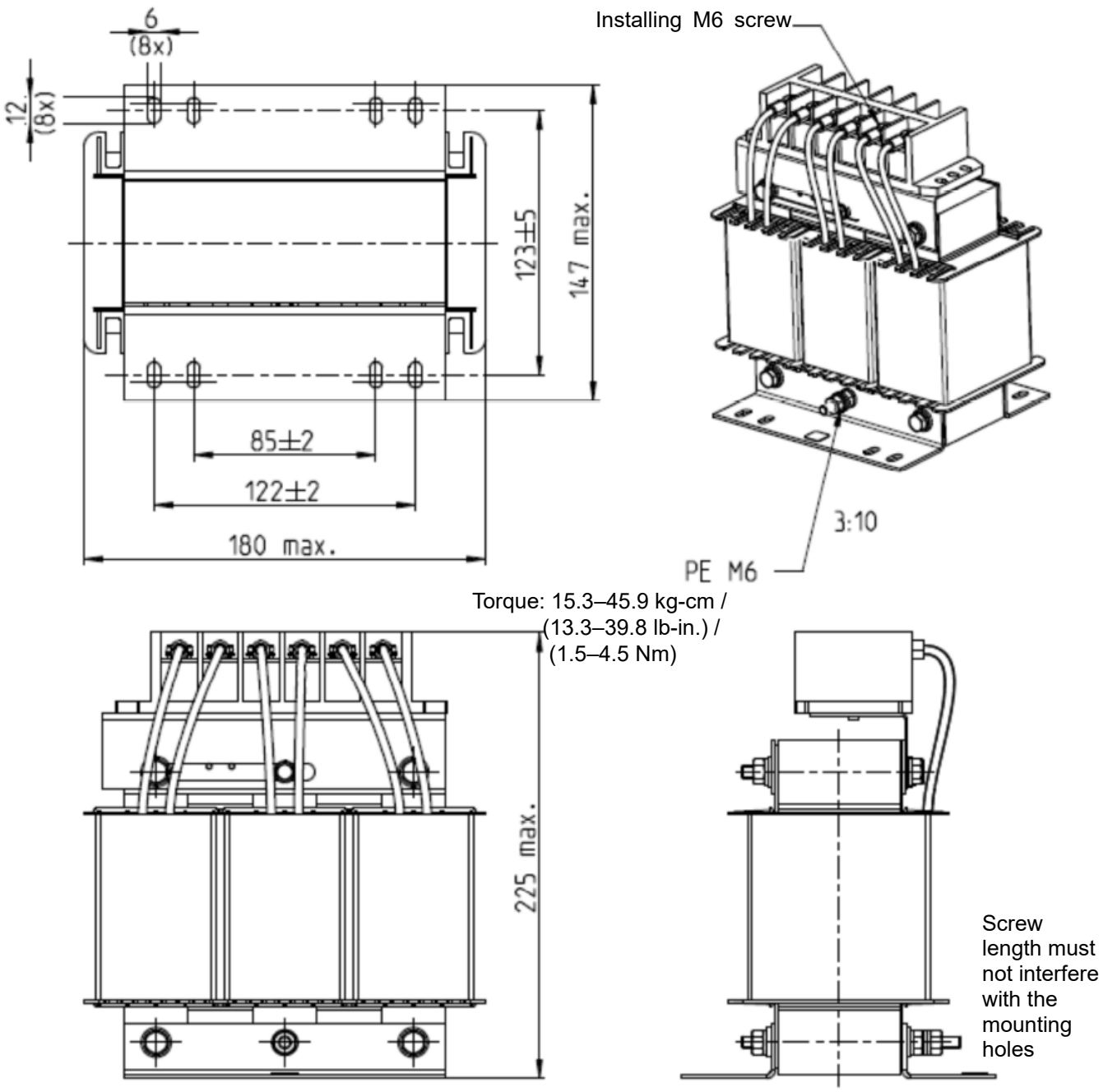

Figure 7-19

Unit: mm

AC Input Reactor Delta Part #	Dimensions
DR060AP405	Dimensions are as shown in the figures above

Table 7-25

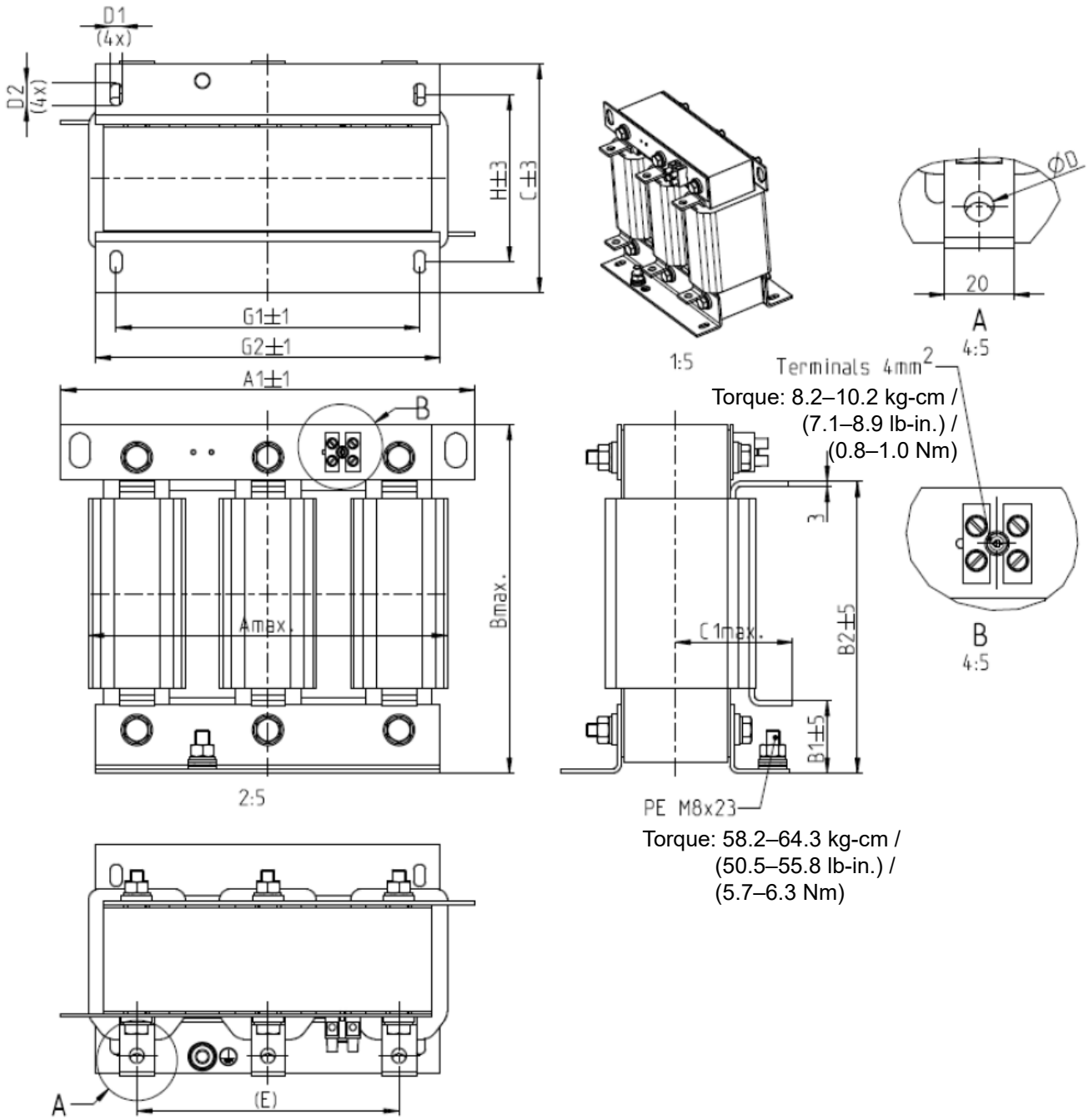

Figure 7-20

Unit: mm

AC Input Reactor Delta Part #	A	A1	B	B1	B2	C	C1	D	D1*D2	E	G1	G2	H
DR073AP334	228	240	215	40	170	133	75	8.5	7*13	152	176	200	97
DR091AP267	228	240	245	40	195	133	90	8.8	7*13	152	176	200	97
DR110AP221	228	240	245	40	195	138	95	8.5	7*13	152	176	200	102

Table 7-26

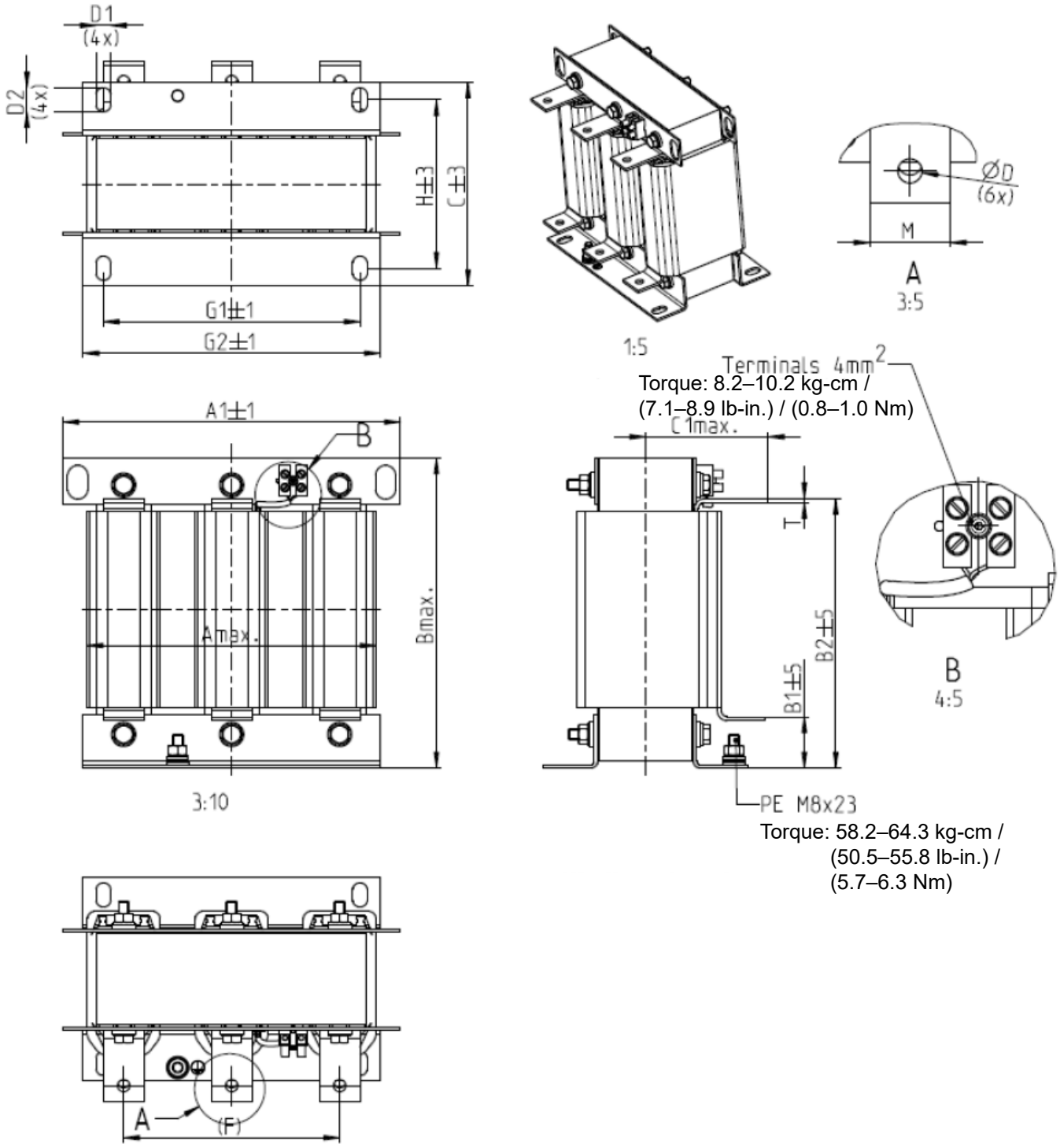

Figure 7-21

Unit: mm

AC Input Reactor Delta Part #	A	A1	B	B1	B2	C	C1	D	D1*D2	F	G1	G2	H	M*T
DR150AP162	240	250	245	40	200	151	105	9	11*18	160	190	220	125	20*3
DR180AP135	240	250	245	40	200	151	105	9	11*18	160	190	220	125	20*3
DR220AP110	264	270	275	50	230	151	105	9	10*18	176	200	230	106	30*3
DR260AP098	264	270	285	50	240	151	105	9	10*18	176	200	230	106	30*3
DR310AP078	300	300	345	55	295	153	105	9	10*18	200	224	260	113	30*3
DR370AP066	300	300	345	55	295	158	120	9	10*18	200	224	260	118	50*4

Table 7-27

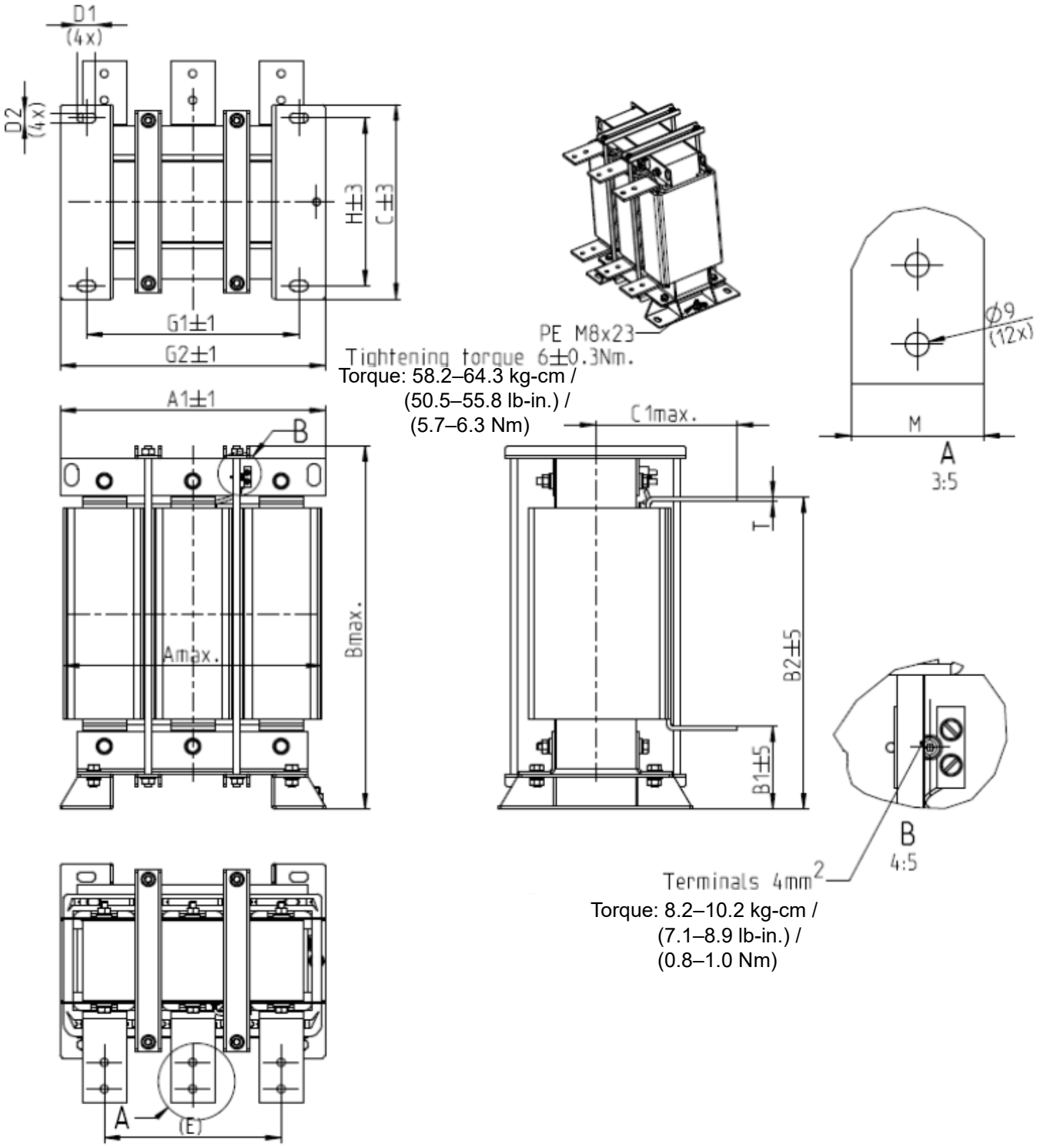

Figure 7-22

Unit: mm

AC Input Reactor Delta Part #	A	A1	B	B1	B2	C	C1	D1*D2	E	G1	G2	H	M*T
DR460AP054	300	300	425	95	355	220	170	11*21	200	240	300	190	50*4
DR550AP044	300	300	445	95	375	220	170	11*21	200	240	300	190	50*4
DR616AP039	360	360	465	105	385	252	190	11*21	240	246	316	220	50*5
DR683AP036	360	360	465	105	385	252	195	11*21	240	246	316	220	50*5
DR866AP028	360	360	520	105	435	272	200	11*21	240	246	316	240	60*6

Table 7-28

DC Reactor

A DC reactor can also increase line impedance, improve the power factor, reduce input current, increase system power, and reduce interference generated from the motor drive. A DC reactor stabilizes the DC bus voltage. Compared with an AC input reactor, a DC reactor is in smaller size, lower price, and lower voltage drop (lower power dissipation).

Installation

Install a DC reactor between terminals +2/DC+ and +1/DC+. Remove the jumper, as shown in the figure below, before installing a DC reactor.

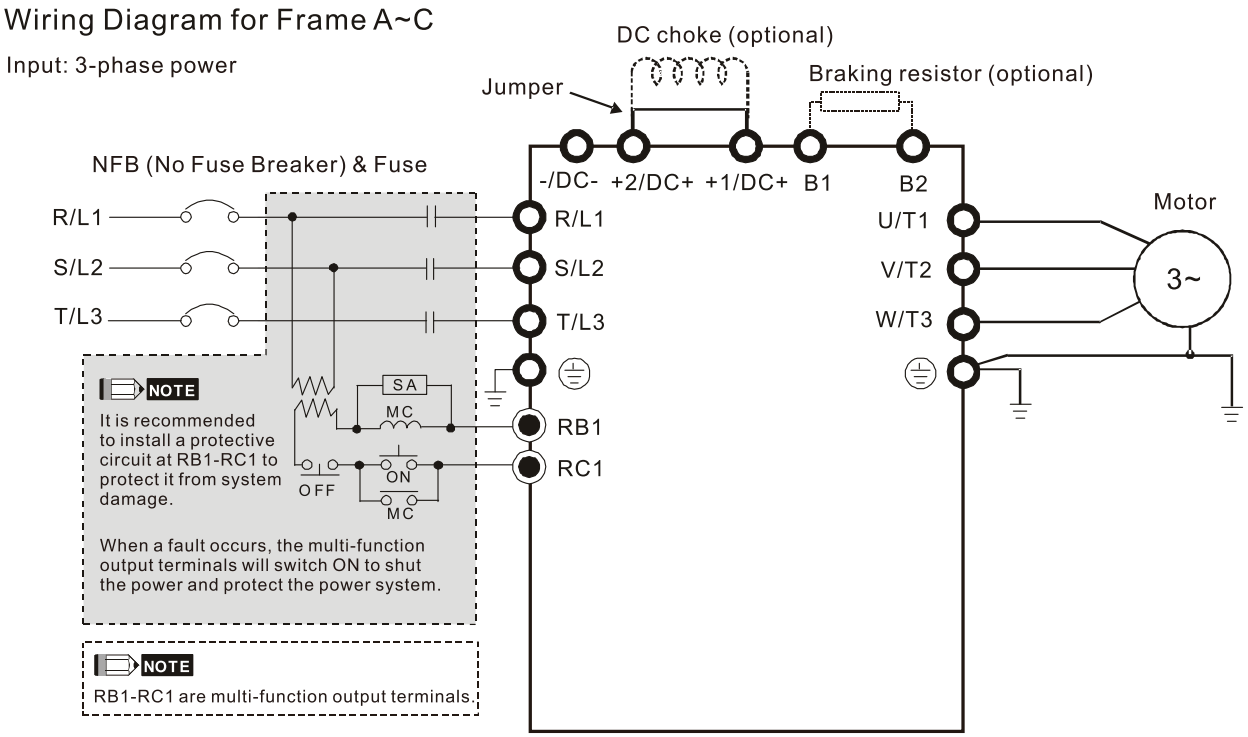

Figure 7-23 Wiring for DC Reactor

Applicable Reactors

200–230V, 50 / 60Hz

Model	HP	Super Heavy Duty			
		Rated Current (Arms)	Saturation Current (Arms)	DC Reactor (mH)	DC Reactor Delta Part #
VFD007CH23A-21	1	5	10	8.64	DR005D0585
VFD015CH23A-21	2	8	16	12.78	DR008D0366
VFD022CH23A-21	3	11	22	18	DR011D0266
VFD037CH23A-21	5	17	34	28.8	DR017D0172
VFD055CH23A-21	7.5	25	50	43.2	DR025D0117
VFD075CH23A-21	10	33	66	55.8	DR033DP851
VFD110CH23A-21	15	49	98	84.6	DR049DP574
VFD150CH23A-21	20	65	130	111.6	DR065DP432
VFD185CH23A-21	25	75	150	127.8	DR075DP391
VFD220CH23A-21	30	90	180	154.8	DR090DP325

Table 7-29

380–460V, 50 / 60Hz

Model	HP	Super Heavy Duty			
		Rated Current (Arms)	Saturation Current (Arms)	DC Reactor (mH)	DC Reactor Delta Part #
VFD007CH43A-21 VFD007CH4EA-21	1	3	6	18.709	DR003D1870
VFD015CH43A-21 VFD015CH4EA-21	2	4	8	14.031	DR004D1403
VFD022CH43A-21 VFD022CH4EA-21	3	6	12	9.355	DR006D0935
VFD037CH43A-21 VFD037CH4EA-21	5	9	18	6.236	DR009D0623
VFD040CH43A-21 VFD040CH4EA-21	5	10.5	21	5.345	DR010D0534
VFD055CH43A-21 VFD055CH4EA-21	7.5	12	24	4.677	DR012D0467
VFD075CH43A-21 VFD075CH4EA-21	10	18	36	3.119	DR018D0311
VFD110CH43A-21 VFD110CH4EA-21	15	24	48	2.338	DR024D0233
VFD150CH43A-21 VFD150CH4EA-21	20	32	64	1.754	DR032D0175
VFD185CH43A-21 VFD185CH4EA-21	25	38	76	1.477	DR038D0147
VFD220CH43A-21 VFD220CH4EA-21	30	45	90	1.247	DR045D0124
VFD300CH43A-21 VFD300CH4EA-21	40	60	120	0.935	DR060DP935

Table 7-30

The table below shows the models with built-in DC reactors:

Frame D0	VFD370CH43S-00; VFD370CH43S-21
Frame D	VFD450CH43A-00; VFD450CH43A-21; VFD450CH43L-00; VFD550CH43A-00; VFD550CH43A-21; VFD550CH43L-00; VFD750CH43A-00; VFD750CH43A-21; VFD750CH43L-00
Frame E	VFD900CH43A-00; VFD900CH43A-21; VFD1100CH43A-00; VFD1100CH43A-21
Frame F	VFD1320CH43A-00; VFD1320CH43A-21
Frame G	VFD1600CH43A-00; VFD1600CH43A-21; VFD1850CH43A-00; VFD1850CH43A-21; VFD2200CH43A-00; VFD2200CH43A-21
Frame H	VFD2800CH43A-00; VFD2800CH43C-21 VFD3150CH43A-00; VFD3150CH43C-21; VFD3550CH43A-00; VFD4500CH43C-21; VFD4500CH43A-00; VFD4500CH43C-21

Table 7-31

DC reactor dimension and specifications:

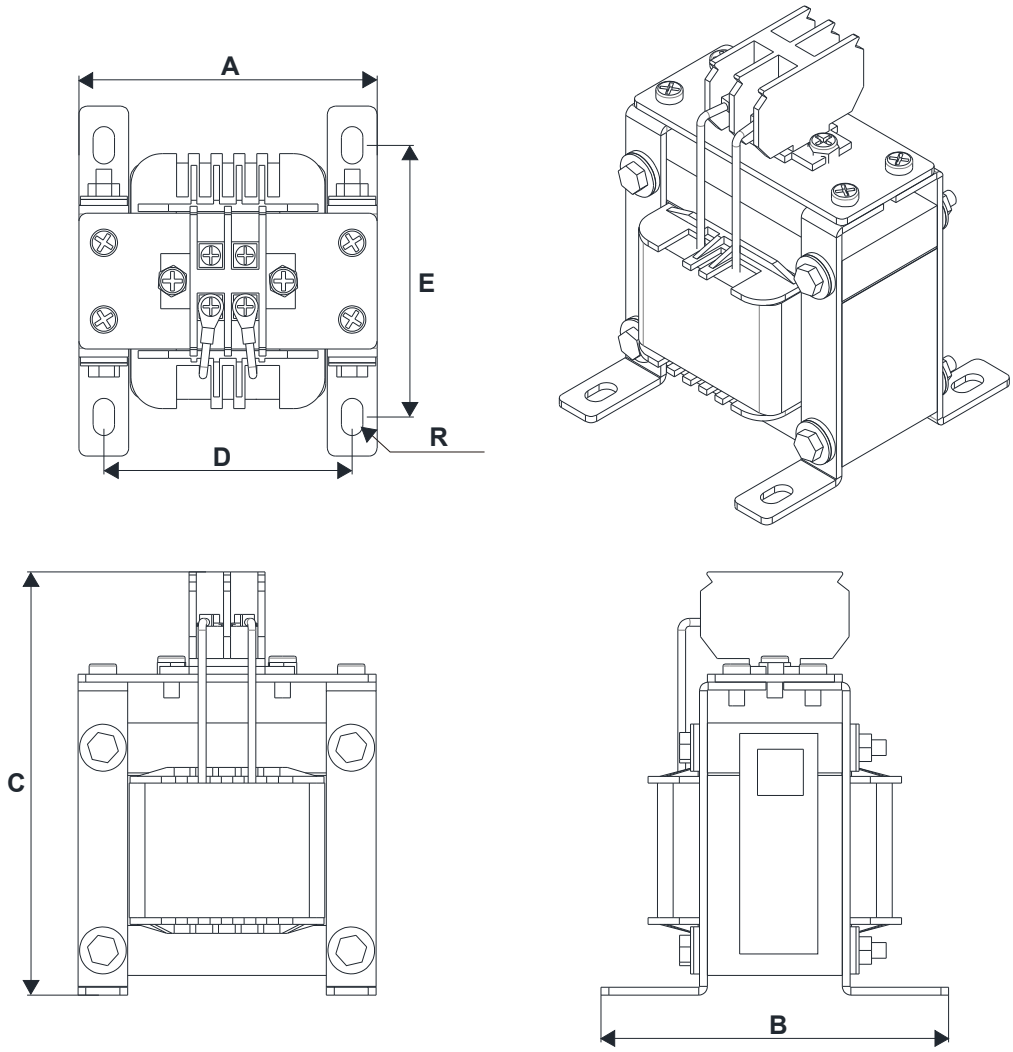

Figure 7-24

DC Reactor Delta Part #	A (mm)	B (mm)	C (mm)	D (mm)	E (mm)	R (mm)
DR005D0585	79	78	112	64±2	56±2	9.5*5.5
DR008D0366	79	78	112	64±2	56±2	9.5*5.5
DR011D0266	79	92	112	64±2	69.5±2	9.5*5.5
DR017D0172	79	112	112	64±2	89.5±2	9.5*5.5
DR025D0117	99	105	128	79±2	82.5±2	9.5*5.5
DR033DP851	117	110	156	95±2	87±2	10*6.5
DR049DP574	117	120	157	95±2	97±2	10*6.5
DR065DP432	117	140	157	95±2	116.5±2	10*6.5
DR075DP391	136	135	178	111±2	112±2	10*6.5
DR090DP325	136	135	179	111±2	112±2	10*6.5
DR003D1870	79	78	112	64±2	56±2	9.5*5.5
DR004D1403	79	92	112	64±2	69.5±2	9.5*5.5
DR006D0935	79	92	112	64±2	69.5±2	9.5*5.5
DR009D0623	79	112	112	64±2	89.5±2	9.5*5.5
DR010D0534	99	93	128	79±2	70±2	9.5*5.5
DR012D0467	99	105	128	79±2	82.5±2	9.5*5.5
DR018D0311	117	110	144	95±2	87±2	10*6.5
DR024D0233	117	120	144	95±2	97±2	10*6.5
DR032D0175	117	140	157	95±2	116.5±2	10*6.5
DR038D0147	136	135	172	111±2	112±2	10*6.5
DR045D0124	136	135	173	111±2	112±2	10*6.5
DR060DP935	136	150	173	111±2	127±2	10*6.5

Table 7-32

The table below shows the THDi specification when using Delta's drive's to work with AC / DC reactors:

Current Harmonics	Models without built-in DC reactor				Models with built-in DC Reactor		
	No AC / DC Reactor	3% Input AC Reactor	5% Input AC Reactor	4% DC Reactor	No AC / DC Reactor	3% Input AC Reactor	5% Input AC Reactor
5th	73.3%	38.5%	30.8%	34.4%	31.16%	27.01%	25.5%
7th	52.74%	15.3%	9.4%	18.6%	23.18%	9.54%	8.75%
11th	7.28%	7.1%	6.13%	7.14%	8.6%	4.5%	4.2%
13th	0.4%	3.75%	3.15%	3.41%	7.9%	0.22%	0.17%
THDi	91%	43.6%	34.33%	38.2%	42.28%	30.5%	28.4%
NOTE: The THDi specification listed here may be slightly different from the actual THDi, depending on the installation and environmental conditions (wires, motors).							

Table 7-33

AC Output Reactor

When using drives in long wiring output application, ground fault (GFF), over-current (OC) and motor over-voltage (OV) often occur. GFF and OC cause errors due to the drive's self-protective mechanism; over-voltage damages motor insulation.

The excessive length of the output wires makes the grounded stray capacitance too large, increase the three-phase output common mode current, and the reflected wave of the long wires makes the motor dv / dt and the motor terminal voltage too high. Thus, installing a reactor on the drive's output side can increase the high-frequency impedance to reduce the dv / dt and terminal voltage to protect the motor.

Installation

Installing an AC output reactor in series between the three output phases U V W and the motor, as shown in the figure below:

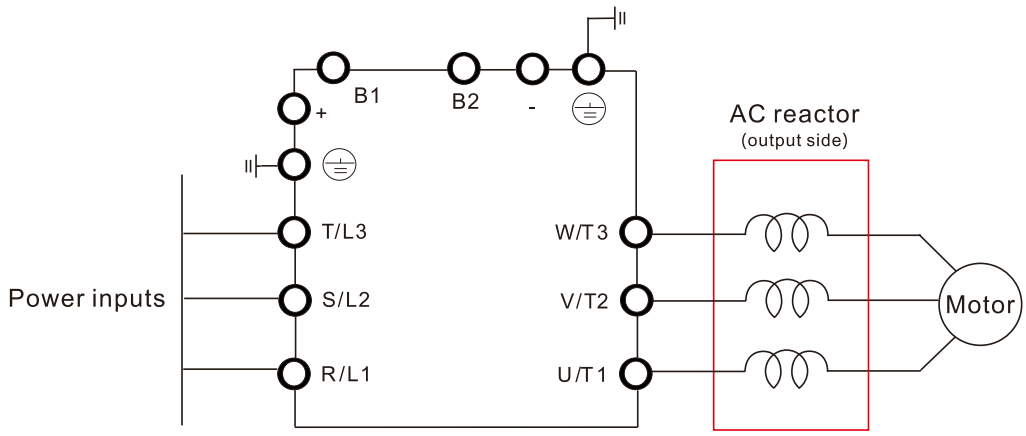

Figure 7-25 Wiring of AC Output Reactor

Applicable Reactors

200–230V, 50 / 60 Hz Super Heavy Duty

Model	HP	Rated Current (Arms)	Saturation Current (Arms)	3% Impedance (mH)	5% Impedance (mH)	Built-in DC Reactor	Output AC Reactor Delta Part #	Weight (kg)
VFD007CH23A-21	1	5	10	2.536	4.227	No	DR005L0254	1.5
VFD015CH23A-21	2	8	16	1.585	2.642	No	DR008L0159	2.5
VFD022CH23A-21	3	11	22	1.152	1.922	No	DR011L0115	3.0
VFD037CH23A-21	5	17	34	0.746	1.243	No	DR017LP746	3.6
VFD055CH23A-21	7.5	25	50	0.507	0.845	No	DR025LP507	5.5
VFD075CH23A-21	10	33	66	0.32	0.534	No	DR033LP320	6.5
VFD110CH23A-21	15	49	98	0.216	0.359	No	DR049LP215	8.6
VFD150CH23A-21	20	65	130	0.163	0.271	No	DR065LP162	12
VFD185CH23A-21	25	75	150	0.169	0.282	No	DR075LP170	14.5
VFD220CH23A-21	30	90	180	0.141	0.235	No	DR090LP141	15
VFD300CH23A-00 VFD300CH23A-21	40	120	240	0.106	0.176	Yes	DR146LP087	22
VFD370CH23A-00 VFD370CH23A-21	50	146	292	0.087	0.145	Yes	DR146LP087	22
VFD450CH23A-00 VFD450CH23A-21	60	180	360	0.070	0.117	Yes	DR180LP070	26

Model	HP	Rated Current (Arms)	Saturation Current (Arms)	3% Impedance (mH)	5% Impedance (mH)	Built-in DC Reactor	Output AC Reactor Delta Part #	Weight (kg)
VFD550CH23A-00 VFD550CH23A-21	75	215	430	0.059	0.098	Yes	DR215LP059	30
VFD750CH23A-00 VFD750CH23A-21	100	255	510	0.049	0.083	Yes	DR276LP049	37

Table 7-34

380–460V, 50 / 60 Hz Super Heavy Duty

Model	HP	Rated Current (Arms)	Saturation Current (Arms)	3% Impedance (mH)	5% Impedance (mH)	Built-in DC Reactor	Output AC Reactor Delta Part #	Weight (kg)
VFD007CH43A-21 VFD007CH4EA-21	1	3	6	8.102	13.502	No	DR003L0810	1.5
VFD015CH43A-21 VFD015CH4EA-21	2	4	8	6.077	10.127	No	DR004L0607	2.5
VFD022CH43A-21 VFD022CH4EA-21	3	6	12	4.050	6.752	No	DR006L0405	3.0
VFD037CH43A-21 VFD037CH4EA-21	5	9	18	2.700	4.501	No	DR009L0270	3.6
VFD040CH43A-21 VFD040CH4EA-21	5	10.5	21	2.315	3.858	No	DR010L0231	5.5
VFD055CH43A-21 VFD055CH4EA-21	7.5	12	24	2.025	3.375	No	DR012L0202	6.0
VFD075CH43A-21 VFD075CH4EA-21	10	18	36	1.174	1.957	No	DR018L0117	6.4
VFD110CH43A-21 VFD110CH4EA-21	15	24	48	0.881	1.468	No	DR024LP881	7.2
VFD150CH43A-21 VFD150CH4EA-21	20	32	64	0.66	1.101	No	DR032LP660	11
VFD185CH43A-21 VFD185CH4EA-21	25	38	76	0.639	1.066	No	DR038LP639	12
VFD220CH43A-21 VFD220CH4EA-21	30	45	90	0.541	0.900	No	DR045LP541	16
VFD300CH43A-21 VFD300CH4EA-21	40	60	120	0.405	0.675	Yes	DR060LP405	18
VFD370CH43S-00 VFD370CH43S-21 VFD370CH43L-00	50	73	146	0.334	0.555	Yes	DR073LP334	25
VFD450CH43A-00 VFD450CH43A-21 VFD450CH43L-00	60	91	182	0.267	0.445	Yes	DR091LP267	25
VFD550CH43A-00 VFD550CH43A-21 VFD550CH43L-00	75	110	220	0.221	0.368	Yes	DR110LP221	28
VFD750CH43A-00 VFD750CH43A-21 VFD750CH43L-00	100	150	300	0.162	0.270	Yes	DR150LP162	35
VFD900CH43A-00 VFD900CH43A-21	125	180	360	0.135	0.225	Yes	DR180LP135	42
VFD1100CH43A-00 VFD1100CH43A-21	150	220	440	0.110	0.184	Yes	DR220LP110	45
VFD1320CH43A-00 VFD1320CH43A-21	175	260	500	0.098	0.162	Yes	DR260LP098	55
VFD1600CH43A-00 VFD1600CH43A-21	215	310	620	0.078	0.131	Yes	DR310LP078	60
VFD1850CH43A-00 VFD1850CH43A-21	250	370	740	0.066	0.109	Yes	DR370LP066	75
VFD2200CH43A-00 VFD2200CH43A-21	300	460	900	0.054	0.090	Yes	DR460LP054	85

Model	HP	Rated Current (Arms)	Saturation Current (Arms)	3% Impedance (mH)	5% Impedance (mH)	Built-in DC Reactor	Output AC Reactor Delta Part #	Weight (kg)
VFD2800CH43A-00 VFD2800CH43C-21	375	550	1100	0.044	0.074	Yes	DR550LP044	95
VFD3150CH43A-00 VFD3150CH43C-21	420	616	1108.8	0.039	0.066	Yes	DR616LP039	110
VFD3550CH43A-00 VFD3550CH43C-21	475	683	1229.4	0.036	0.060	Yes	DR683LP036	130
VFD4500CH43A-00 VFD4500CH43C-21	600	866	1558.8	0.028	0.047	Yes	DR866LP028	170

Table 7-35

AC output reactor dimensions and specifications:

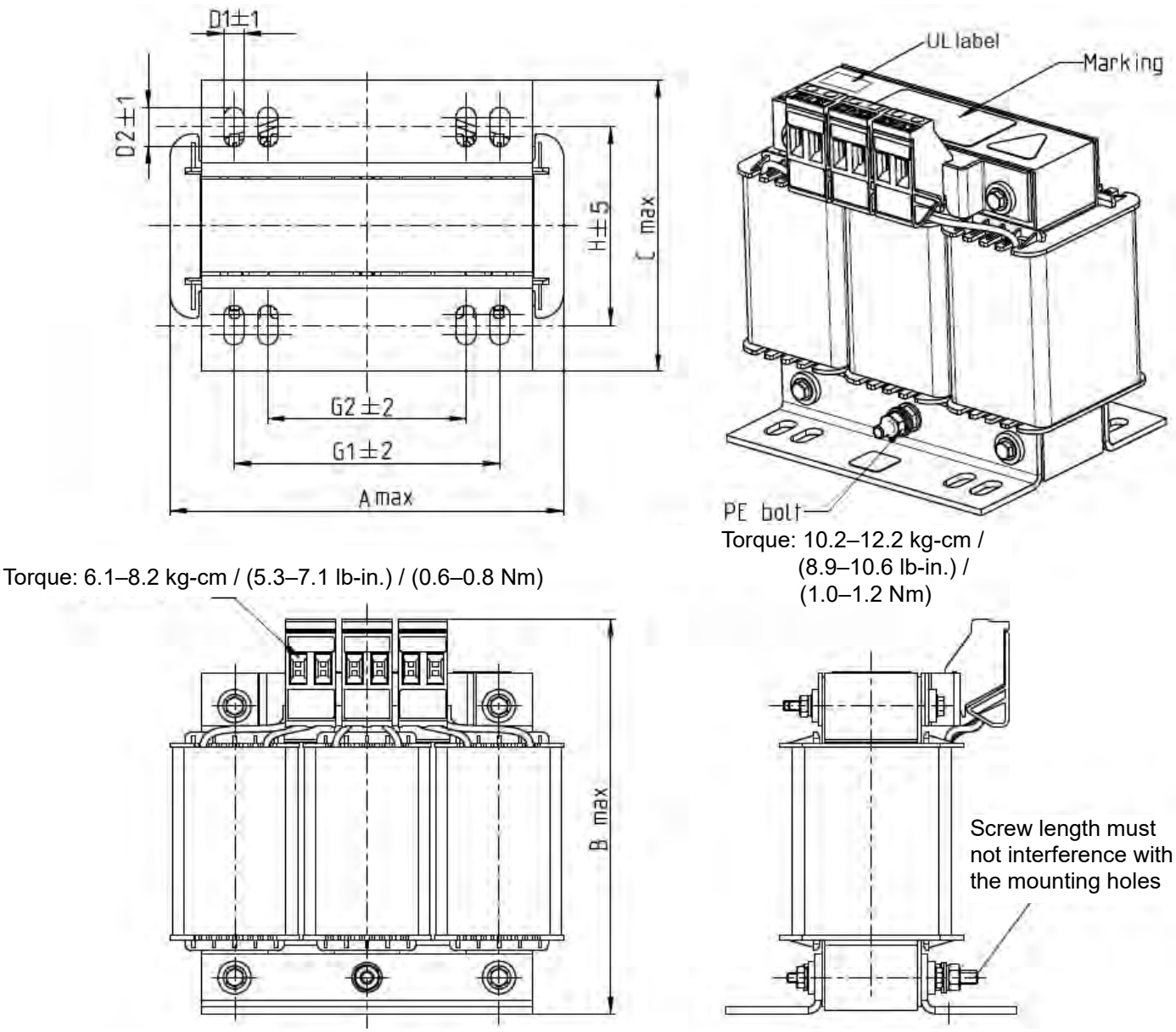

Figure 7-26

Unit: mm

Output AC Reactor Delta Part #	A	B	C	D1*D2	E	G1	G2	PE D
DR005L0254	96	110	70	6*9	42	60	40	M4
DR008L0159	120	135	96	6*12	60	80.5	60	M4
DR011L0115	120	135	96	6*12	60	80.5	60	M4
DR017LP746	120	135	105	6*12	65	80.5	60	M4
DR025LP507	150	160	120	6*12	88	107	75	M4
DR033LP320	150	160	120	6*12	88	107	75	M4

Table 7-36

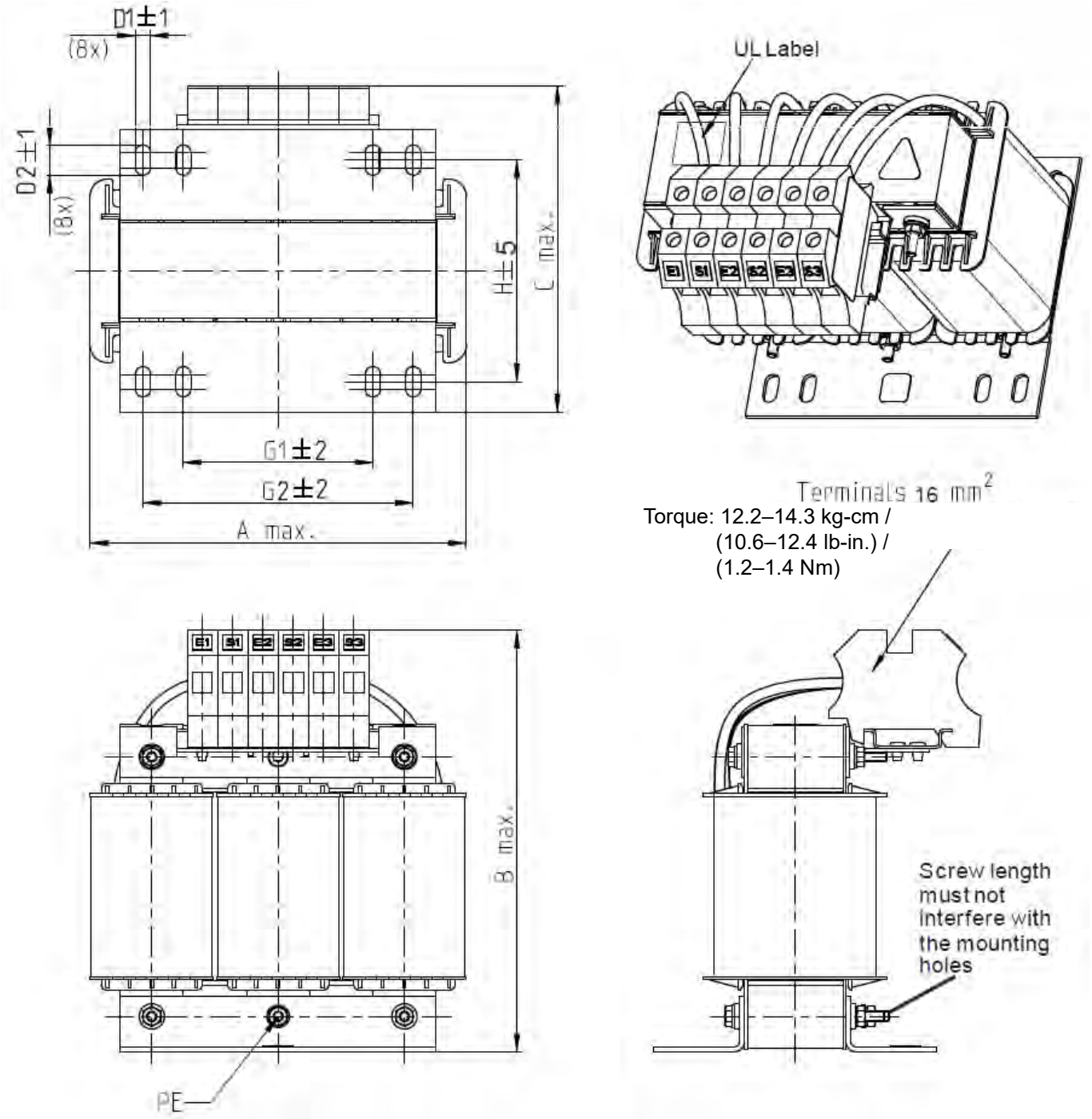

Figure 7-27

Unit: mm

Output AC Reactor Delta Part #	A	B	C	D1*D2	H	G	G1	Q	M	PE
DR049LP215	180	205	175	6*12	115	85	122	16	1.2-1.4	M4
DR065LP162	180	215	185	6*12	115	85	122	35	2.5-3.0	M4

Table 7-37

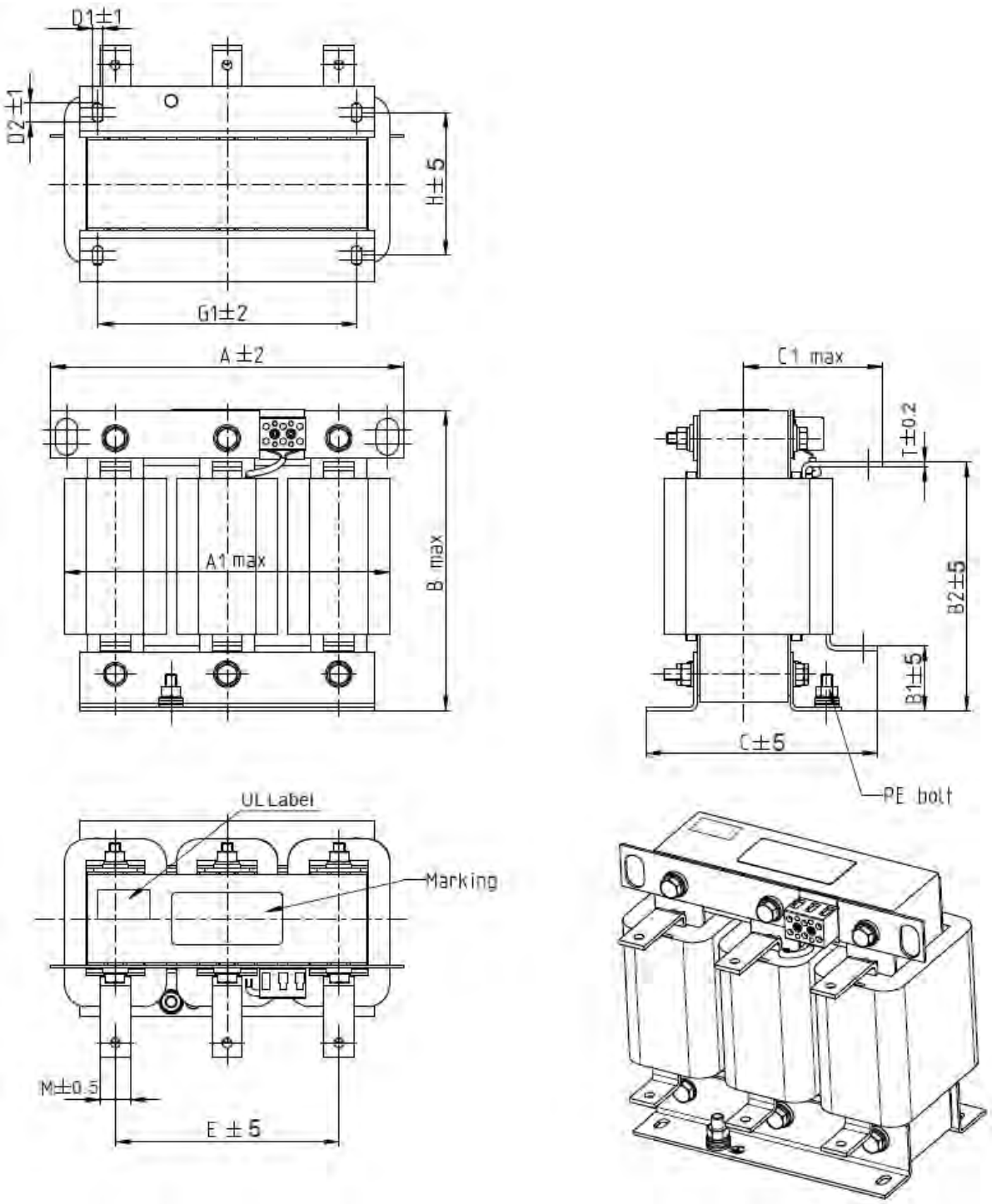

Figure 7-28

Unit: mm

Output AC Reactor Delta Part #	A	A1	B	B1	B2	C	C1	D1*D2	E	G1	H	M*T
DR075LP170	240	228	215	44	170	151	100	7*13	152	176	85	20*3
DR090LP141	240	228	215	44	170	151	100	7*13	152	176	85	20*3
DR146LP087	240	228	240	45	202	165	110	7*13	152	176	97	30*3
DR180LP070	250	240	250	46	205	175	110	11*18	160	190	124	30*5
DR215LP059	250	240	275	51	226	180	120	11*18	160	190	124	30*5

Table 7-38

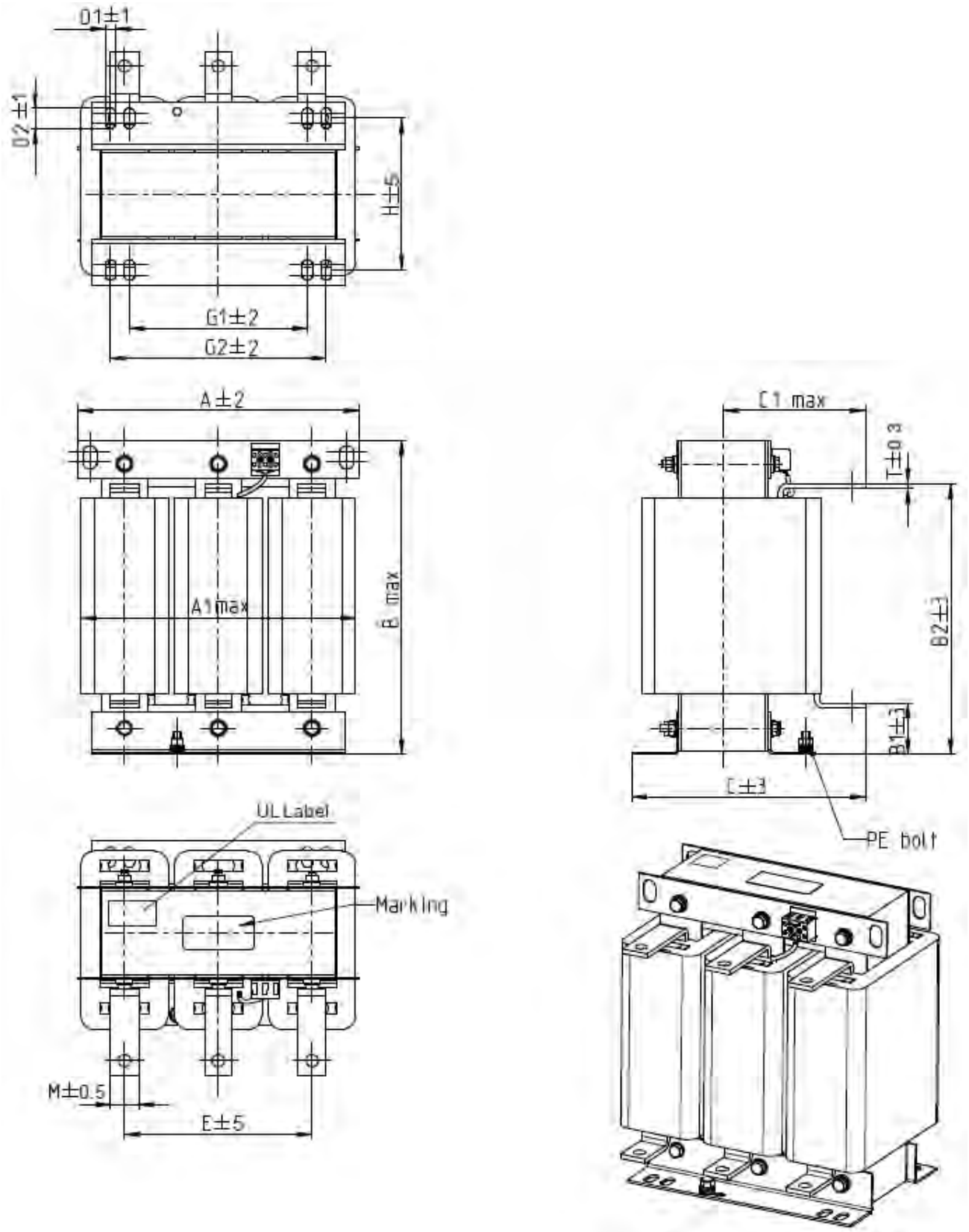

Figure 7-29

Unit: mm

Output AC Reactor Delta Part #	A	A1	B	B1	B2	C	C1	D1*D2	E	H	M*T
DR276LP049	270	260	320	50	265	200	140	10*18	176	106	30*5

Table 7-39

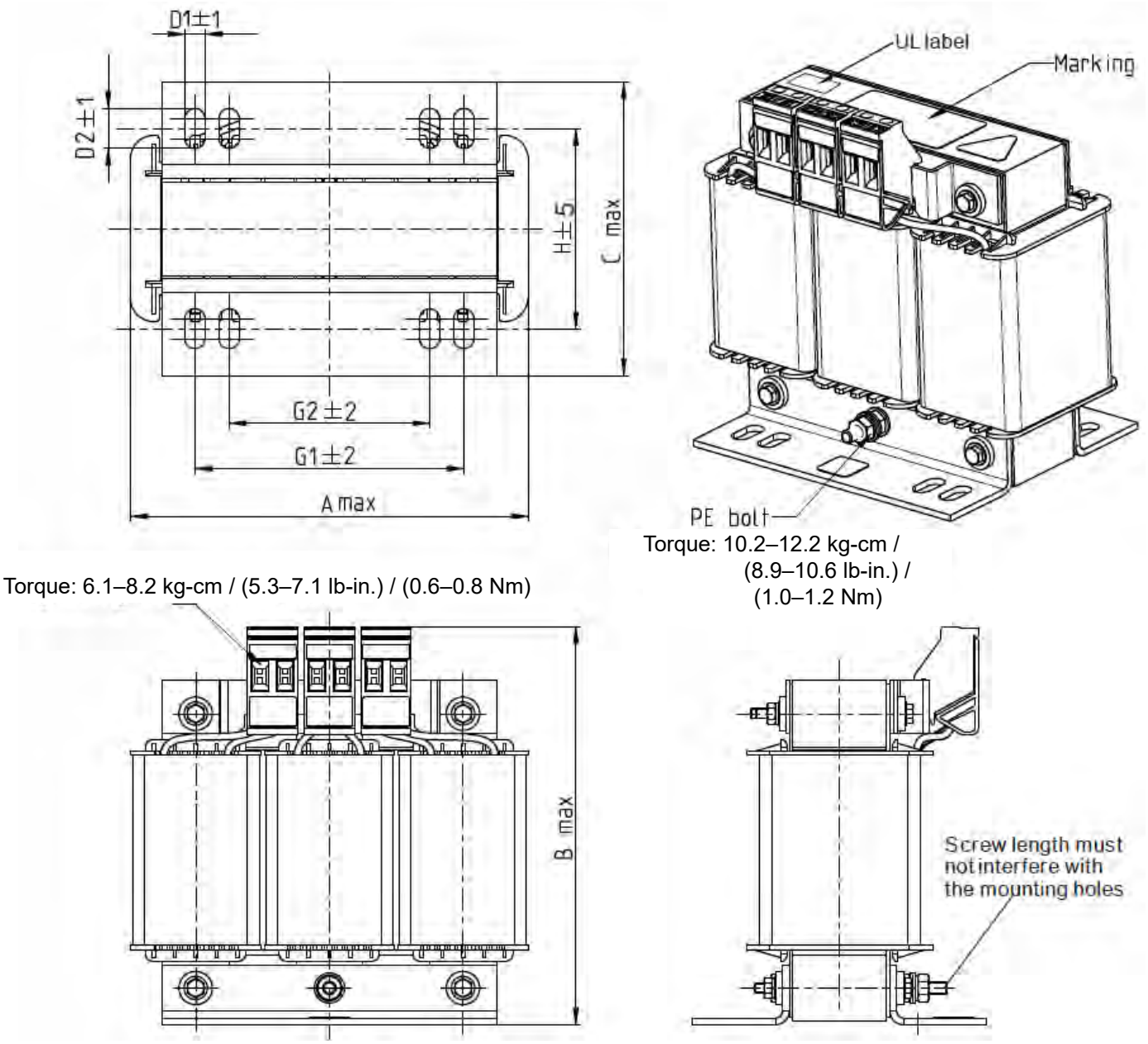

Figure 7-30

Unit: mm

Output AC Reactor Delta Part #	A	B	C	D1*D2	H	G1	G2	PE D
DR003L0810	96	115	65	6*9	42	60	40	M4
DR004L0607	120	135	95	6*12	60	80.5	60	M4
DR006L0405	120	135	95	6*12	60	80.5	60	M4
DR009L0270	150	160	100	6*12	74	107	75	M4
DR010L0231	150	160	115	6*12	88	107	75	M4
DR012L0202	150	160	115	6*12	88	107	75	M4
DR018L0117	150	160	115	6*12	88	107	75	M4
DR024LP881	150	160	115	6*12	88	107	75	M4
DR032LP660	180	190	145	6*12	114	122	85	M6

Table 7-40

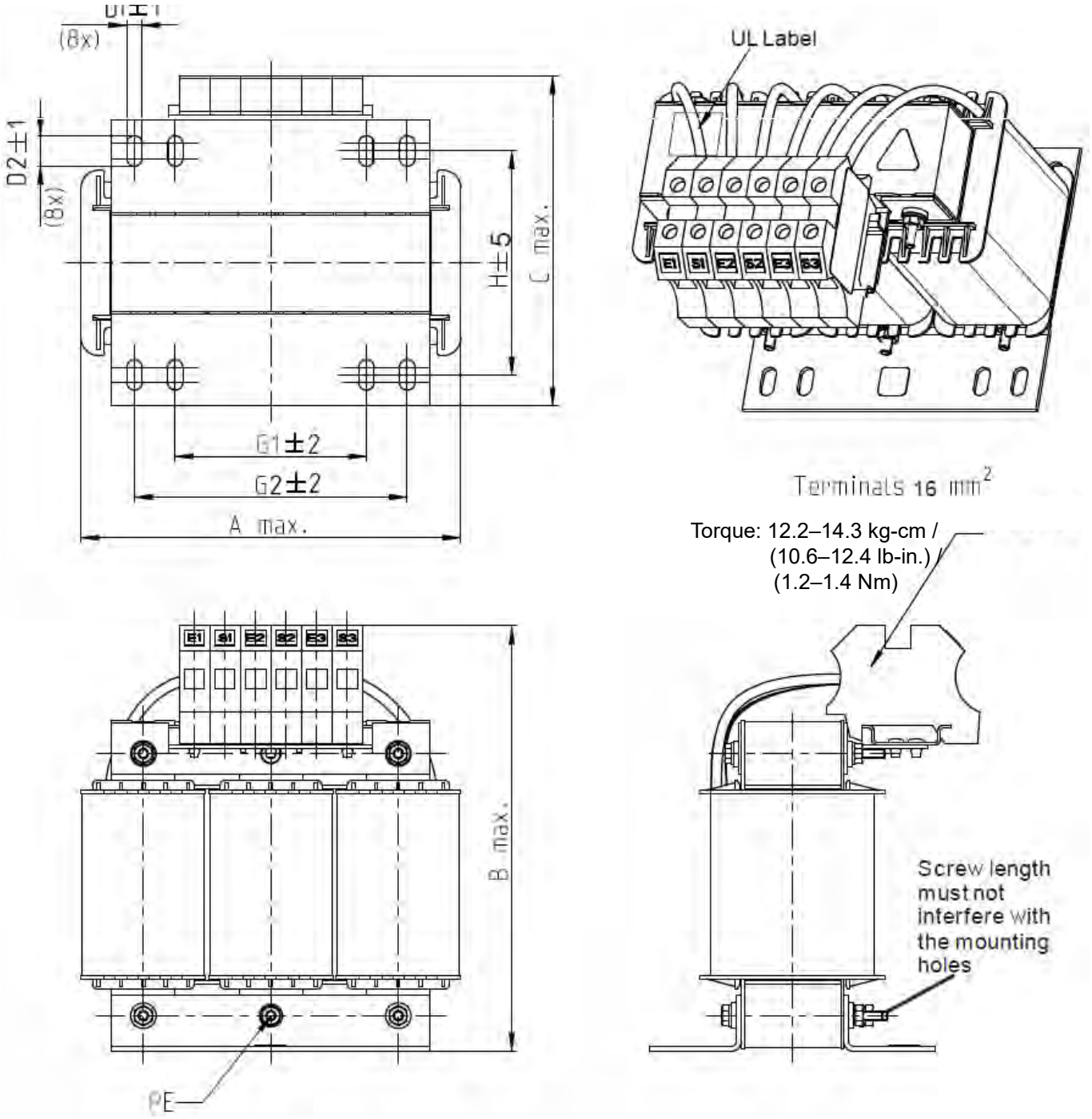

Figure 7-31

Unit: mm

Output AC Reactor Delta Part #	A	B	C	D1*D2	H	G1	G2	PE
DR038LP639	180	205	170	6*12	115	85	122	M4
DR045LP541	235	245	150	7*13	85	/	176	M6

Table 7-41

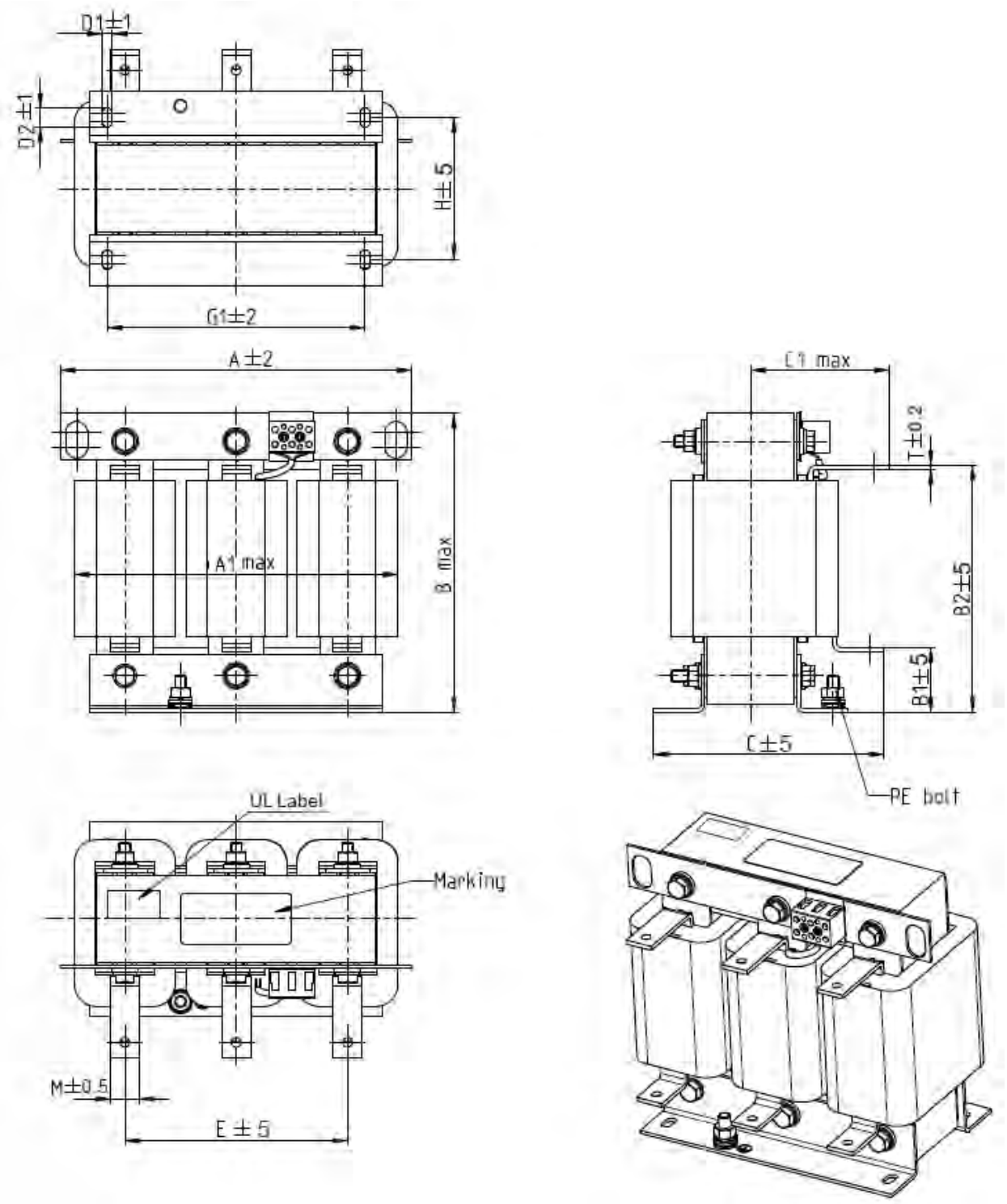

Figure 7-32

Unit: mm

Output AC Reactor Delta Part #	A	A1	B	B1	B2	C	C1	D1*D2	E	G1	H	M*T
DR060LP405	240	228	215	44	170	163	110	7*13	152	176	97	20*3
DR073LP334	250	235	235	44	186	174	115	11*18	160	190	124	20*3
DR091LP267	250	240	235	44	186	174	115	11*18	160	190	124	20*3
DR110LP221	270	260	245	50	192	175	115	10*18	176	200	106	20*3

Table 7-42

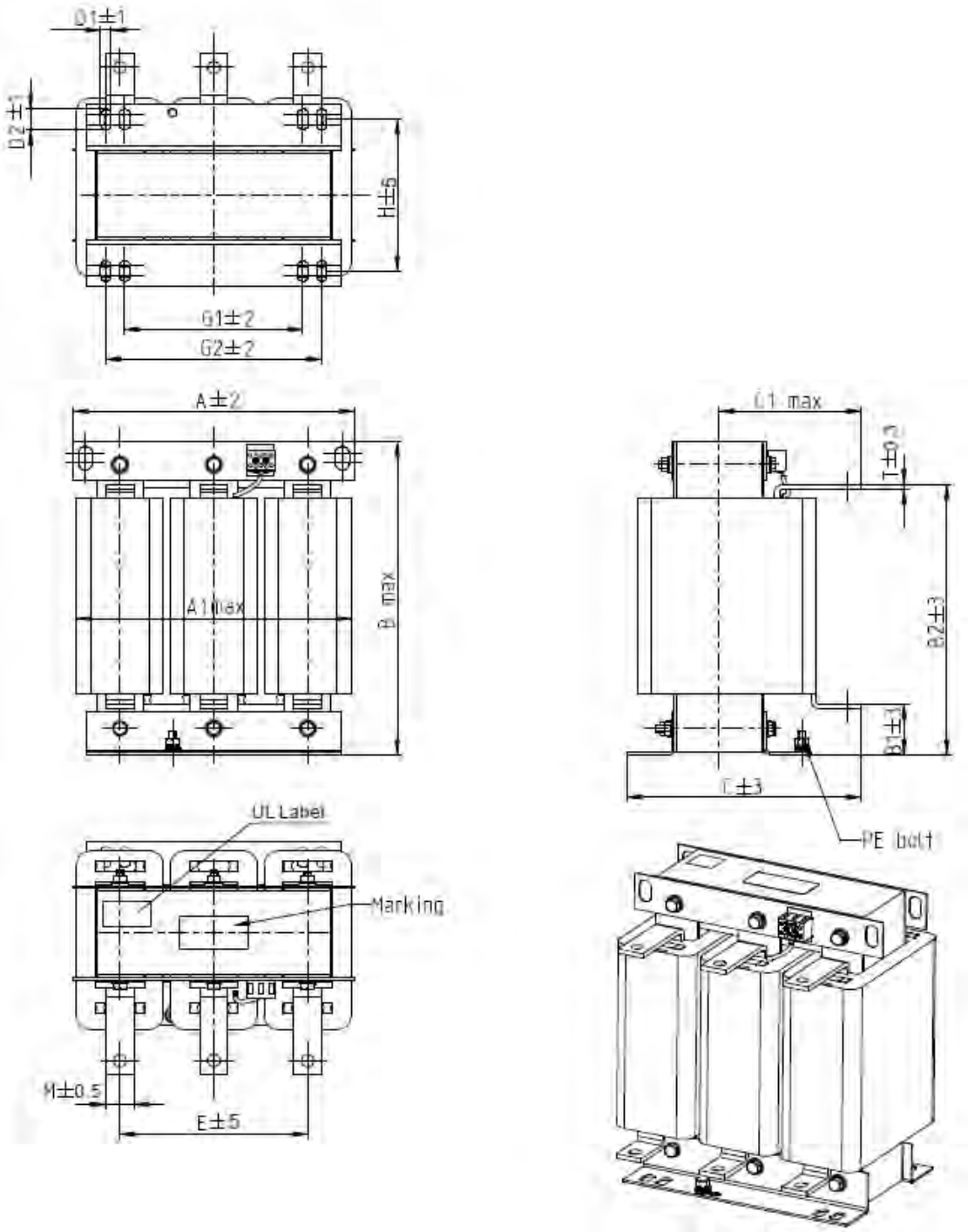

Figure 7-33

Unit: mm

Output AC Reactor Delta Part #	A	A1	B	B1	B2	C	C1	D1*D2	E	G1	G2	H	M*T
DR150LP162	270	264	265	51	208	192	125	10*18	176	200	/	118	30*3
DR180LP135	300	295	310	55	246	195	125	11*22	200	230	190	142	30*3
DR220LP110	300	298	310	57	248	210	140	11*22	200	230	190	142	30*5
DR260LP098	300	295	330	56	270	227	140	11*22	200	230	190	160	30*5
DR310LP078	300	298	350	54	288	233	145	11*22	200	230	190	160	30*5
DR370LP066	300	298	350	54	289	268	170	11*22	200	230	190	185	40*5

Table 7-43

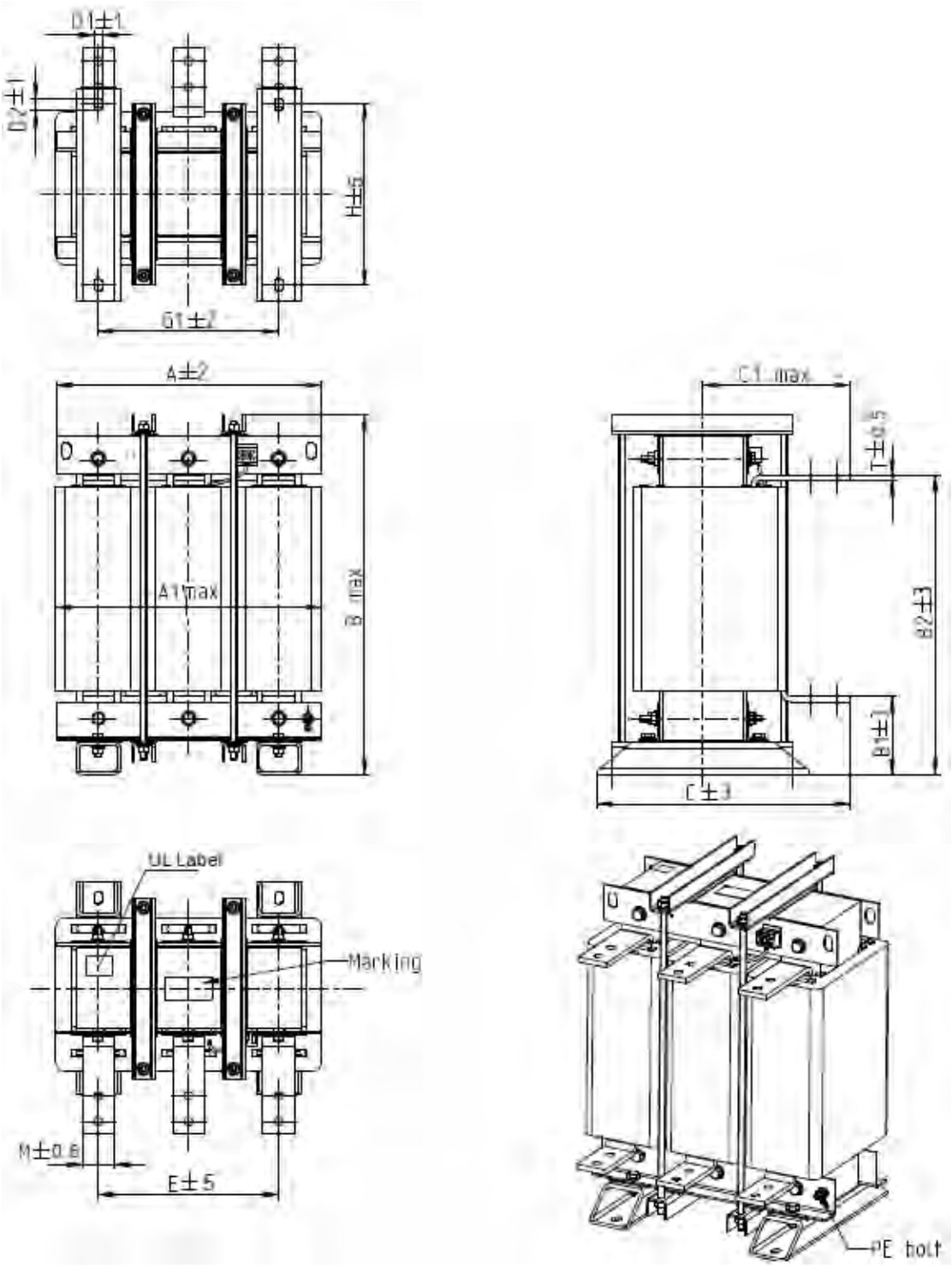

Figure 7-34

Unit: mm

Output AC Reactor Delta Part #	A	A1	B	B1	B2	C	C1	D1*D2	E	G1	H	M*T
DR460LP054	360	355	510	106	401	346	215	12*20	240	240	240	50*5
DR550LP044	360	355	510	106	401	358	220	12*20	240	240	250	50*5
DR616LP039	360	355	510	110	401	376	230	12*20	240	240	270	50*8
DR683LP036	360	355	510	110	401	396	240	12*20	240	240	290	50*8
DR866LP028	410	418	570	120	464	402	245	12*20	280	280	290	50*8

Table 7-44

Motor Cable Length

1. Consequence of leakage current on the motor

   If the cable length is too long, the stray capacitance between cables increase and may cause leakage current. In this case, It activates the over-current protection, increases leakage current, or may affect the current display. The worst case is that it may damage the AC motor drive. If more than one motor is connected to one AC motor drive, the total wiring length should be the sum of the wiring length from AC motor drive to each motor.

   For the 460V series AC motor drive, when you install an overload thermal relay between the drive and the motor to protect the motor from overheating, the connecting cable must be shorter than 50 m; however, an overload thermal relay malfunction may still occur. To prevent the malfunction, install an output reactor (optional) to the drive or lower the carrier frequency setting (see Pr.00-17 Carrier Frequency).

2. Consequence of the surge voltage on the motor

   When a motor is driven by a PWM-type AC motor drive, the motor terminals experience surge voltages (dv/dt) due to power transistor conversion of AC motor drive. When the motor cable is very long (especially for the 460V series), surge voltages (dv/dt) may damage the motor insulation and bearing. To prevent this, follow these rules:

   a. Use a motor with enhanced insulation.
   b. Reduce the cable length between the AC motor drive and motor to suggested values.
   c. Connect an output reactor (optional) to the output terminals of the AC motor drive.

Refer to the following tables for the suggested motor shielded cable length. Use a motor with a rated voltage ≤ 500 V_{AC} and insulation level ≥ 1.35 kV in accordance with IEC 60034-17.

230V Models	Rated Current (Arms)	Without an AC output reactor		With an AC output reactor	
		Shielded Cable (meter)	Non-shielded Cable (meter)	Shielded Cable (meter)	Non-shielded Cable (meter)
VFD007CH23A-21	5	50	75	75	115
VFD015CH23A-21	8	50	75	75	115
VFD022CH23A-21	11	50	75	75	115
VFD037CH23A-21	17	50	75	75	115
VFD055CH23A-21	25	50	75	75	115
VFD075CH23A-21	33	100	150	150	225
VFD110CH23A-21	49	100	150	150	225
VFD150CH23A-21	65	100	150	150	225
VFD185CH23A-21	75	100	150	150	225
VFD220CH23A-21	90	100	150	150	225
VFD300CH23A-00 VFD300CH23A-21	120	100	150	150	225
VFD370CH23A-00 VFD370CH23A-21	146	100	150	150	225
VFD450CH23A-00 VFD450CH23A-21	180	150	225	225	325
VFD550CH23A-00 VFD550CH23A-21	215	150	225	225	325
VFD750CH23A-00 VFD750CH23A-21	255	150	225	225	325

Table 7-45

460V Models	Rated Current (Arms)	Without an AC output reactor		With an AC output reactor	
		Shielded Cable (meter)	Non-shielded Cable (meter)	Shielded Cable (meter)	Non-shielded Cable (meter)
VFD007CH43A-21	3	50	75	75	115
VFD015CH43A-21	4	50	75	75	115
VFD022CH43A-21	6	50	75	75	115
VFD037CH43A-21	9	50	75	75	115
VFD040CH43A-21	10.5	50	75	75	115
VFD055CH43A-21	12	50	75	75	115
VFD075CH43A-21	18	100	150	150	225
VFD110CH43A-21	24	100	150	150	225
VFD150CH43A-21	32	100	150	150	225
VFD185CH43A-21	38	100	150	150	225
VFD220CH43A-21	45	100	150	150	225
VFD300CH43A-21	60	100	150	150	225
VFD370CH43S-00 VFD370CH43S-21 VFD370CH43L-00	73	100	150	150	225
VFD450CH43A-00 VFD450CH43A-21 VFD450CH43L-00	91	150	225	225	325
VFD550CH43A-00 VFD550CH43A-21 VFD550CH43L-00	110	150	225	225	325
VFD750CH43A-00 VFD750CH43A-21	150	150	225	225	325
VFD900CH43A-00 VFD900CH43A-21	180	150	225	225	325
VFD1100CH43A-00 VFD1100CH43A-21	220	150	225	225	325
VFD1320CH43A-00 VFD1320CH43A-21	250	150	225	225	325
VFD1600CH43A-00 VFD1600CH43A-21	310	150	225	225	325
VFD1850CH43A-00 VFD1850CH43A-21	370	150	225	225	325
VFD2200CH43A-00 VFD2200CH43A-21	460	150	225	225	325
VFD2800CH43A-00 VFD2800CH43C-21	550	150	225	225	325
VFD3150CH43A-00 VFD3150CH43C-21	616	150	225	225	325
VFD3550CH43A-00 VFD3550CH43C-21	683	150	225	225	325
VFD4500CH43A-00 VFD4500CH43C-21	866	150	225	225	325

Table 7-46

460V Built-in EMC Filter Drive Model	Rated Current (Arms)	Without an AC output reactor		With an AC output reactor	
		Shielded Cable (meter)	Non-shielded Cable (meter)	Shielded Cable (meter)	Non-shielded Cable (meter)
VFD007CH4EA-21	3	30	75	30	115
VFD015CH4EA-21	4	30	75	30	115
VFD022CH4EA-21	6	30	75	30	115
VFD037CH4EA-21	9	30	75	30	115
VFD040CH4EA-21	10.5	30	75	30	115
VFD055CH4EA-21	12	30	75	30	115
VFD075CH4EA-21	18	50	150	50	225

460V	Rated Current (Arms)	Without an AC output reactor		With an AC output reactor	
Built-in EMC Filter Drive Model		Shielded Cable (meter)	Non-shielded Cable (meter)	Shielded Cable (meter)	Non-shielded Cable (meter)
VFD110CH4EA-21	24	50	150	50	225
VFD150CH4EA-21	32	50	150	50	225
VFD185CH4EA-21	38	50	150	50	225
VFD220CH4EA-21	45	50	150	50	225
VFD300CH4EA-21	60	50	150	50	225

Table 7-47

NOTE: The table above is the suggested cable length of EMC built-in models operating under surge voltage influencing. To pass the noise emission and Electromagnetic interference certification, the cable length should follow Section 7-6 EMC filters instruction.

Requirements on insulation level of Curve B motor

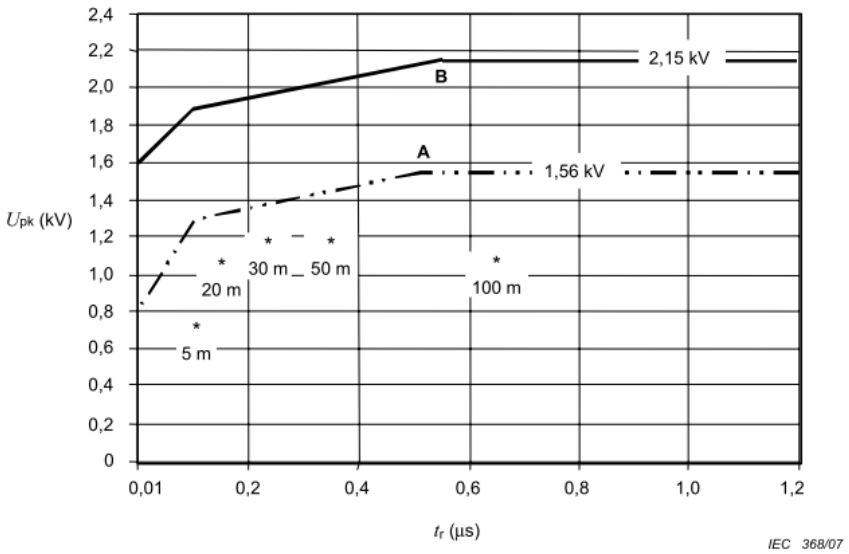

Key

A Without filters for motors up to 500 V a.c.

B Without filters for motors up to 690 V a.c.

* Examples of measured results at 415 V supply, for different lengths of steel armoured cable

Figure 14 – Limiting curves of impulse voltage U_{pk}, measured between two motor phase terminals, as a function of the *peak rise time* t_r

Figure 7-35

The t_r is defined as:

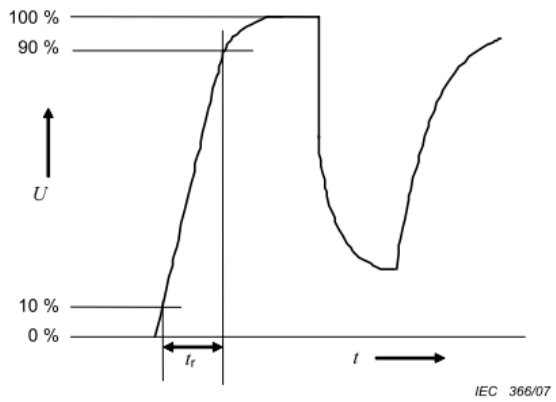

Figure 7-36

Sine-wave Filter

When there is longer cable length connected between the motor drive and the motor, the damping leads to high frequency resonator, and makes impedance matching poor to enlarge the voltage reflection. This phenomenon will generate twice-input voltage in the motor side, which will easily make motor voltage overshoot to damage insulation.

To prevent this, installing sine-wave filter can transform PWM output voltage to smooth and low-ripple sine-wave, and motor cable length can be longer than 1000 meters.

Installation

Install a Sine-wave filter in series between the three output phases U V W and the motor, as shown in the figure below:

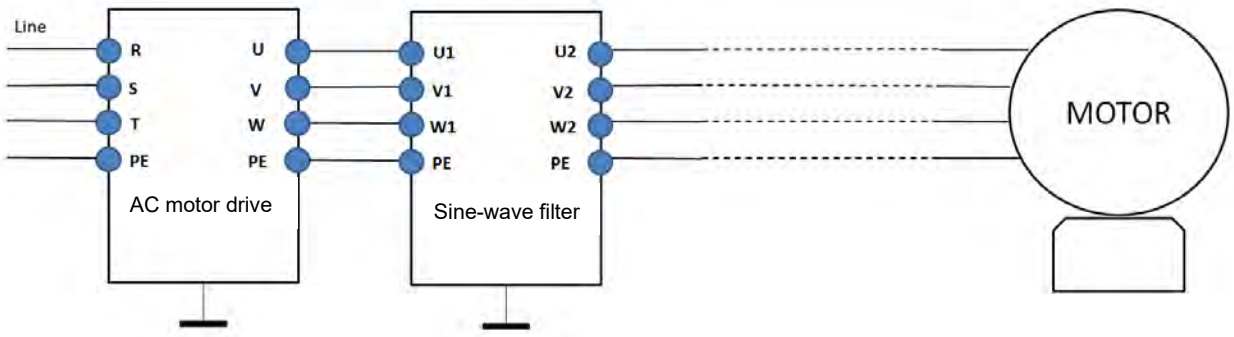

Figure 7-37 Wiring of non-shielded cable

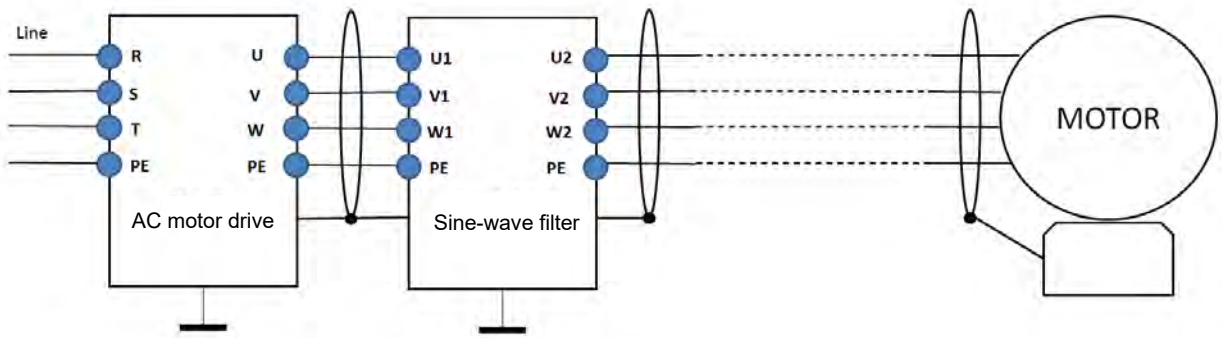

Figure 7-38 Wiring of shielded cable

Applicable Sine-wave Filters

200–230V, 50 / 60 Hz

kW	HP	Rated Current (Arms)	Suggested Sine-wave Filter Part #	Output Cable Length (m) (Shielded or Non-shielded)
0.75	1	5	B84143V0006R227	1000
1.5	2	8	B84143V0011R227	
2.2	3	11		
3.7	5	17	B84143V0025R227	
5.5	7.5	25		
7.5	10	33	B84143V0033R227	
11	15	49	B84143V0050R227	
15	20	65	B84143V0066R227	
18.5	25	75	B84143V0075R227	
22	30	90	B84143V0095R227	
30	40	120	B84143V0132R227	
37	50	146	B84143V0180R227	
45	60	180		
55	75	215	B84143V0250R227	
75	100	255	B84143V0320R227	

Table 7-48

380–460V, 50 / 60 Hz

kW	HP	Rated Current (Arms)	Suggested Sine-wave Filter Part #	Output Cable Length (m) (Shielded or Non-shielded)
0.75	1	3	B84143V0004R227	1000
1.5	2	4		
2.2	3	6	B84143V0006R227	
3.7	5	9	B84143V0011R227	
4	5	10.5		
5.5	7.5	12	B84143V0016R227	
7.5	10	18	B84143V0025R227	
11	15	24		
15	20	32	B84143V0033R227	
18.5	25	38	B84143V0050R227	
22	30	45		
30	40	60	B84143V0066R227	
37	50	73	B84143V0075R227	
45	60	91	B84143V0095R227	
55	75	110	B84143V0132R227	
75	100	150	B84143V0180R227	
90	125	180		
110	150	220	B84143V0250R227	

kW	HP	Rated Current (Arms)	Suggested Sine-wave Filter Part #	Output Cable Length (m) (Shielded or Non-shielded)
132	175	260	B84143V0320R227	1000
160	215	310		
185	250	370	Contact supplier EPCOS	
220	300	460		
280	375	550		
315	420	616		
355	475	683		
450	600	866		

Table 7-49

Sine-wave Filter Part #	Refer to website: http://en.tdk.eu/inf/30/db/emc_2014/B84143V_R227.pdf
B84143V0004R227	I_R:4A, Sine-wave output filters for 3-phase systems
B84143V0006R227	I_R:6A, Sine-wave output filters for 3-phase systems
B84143V0011R227	I_R:11A, Sine-wave output filters for 3-phase systems
B84143V0016R227	I_R:16A, Sine-wave output filters for 3-phase systems
B84143V0025R227	I_R:25A, Sine-wave output filters for 3-phase systems
B84143V0033R227	I_R:33A, Sine-wave output filters for 3-phase systems
B84143V0050R227	I_R:50A, Sine-wave output filters for 3-phase systems
B84143V0066R227	I_R:66A, Sine-wave output filters for 3-phase systems
B84143V0075R227	I_R:75A, Sine-wave output filters for 3-phase systems
B84143V0095R227	I_R:95A, Sine-wave output filters for 3-phase systems
B84143V0132R227	I_R:132A, Sine-wave output filters for 3-phase systems
B84143V0180R227	I_R:180A, Sine-wave output filters for 3-phase systems
B84143V0250R227	I_R:250A, Sine-wave output filters for 3-phase systems
B84143V0320R227	I_R:320A, Sine-wave output filters for 3-phase systems

Table 7-50

7-5 Zero Phase Reactors

Reactor Model*	Recommended Wire Size		Wiring Method	Max. Wiring Q'ty
RF008X00A	≤ 8 AWG	≤ 8.37 mm^2	Diagram A	1C*3 or 4C*1
T60006L2040W453	≤ 8 AWG	≤ 8.37 mm^2	Diagram B	
RF004X00A	≤ 1 AWG	≤ 42.41mm^2	Diagram A	1C*3 or 4C*1
T60006L2050W565	≤ 1 AWG	≤ 42.41mm^2	Diagram B	
RF002X00A	≤ 600MCM	≤ 304 mm^2	Diagram A	1C*3 or 4C*1
T60006L2160V066	≤ 600MCM	≤ 304 mm^2	Diagram B	
RF300X00A	≤ 350 MCM	≤ 185 mm^2	Diagram A	1C*12 or 4C*3

Table 7-51

NOTE:

1. * 600V insulated cable wire
2. The table above only considers the motor wire size
3. For the Max. wiring quantity, refer to Chapter 5 Main Circuit Terminal

Diagram A

Put all wires through at least one core without winding.

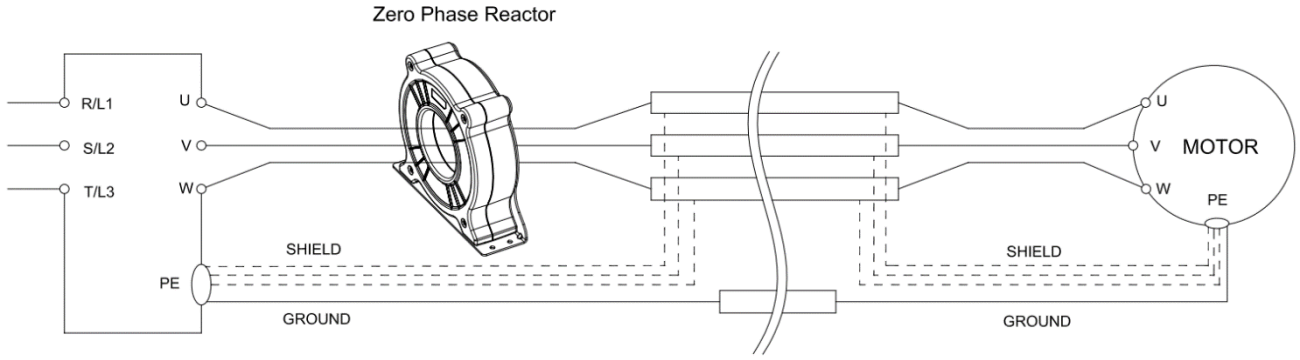

Figure 7-39

Diagram B

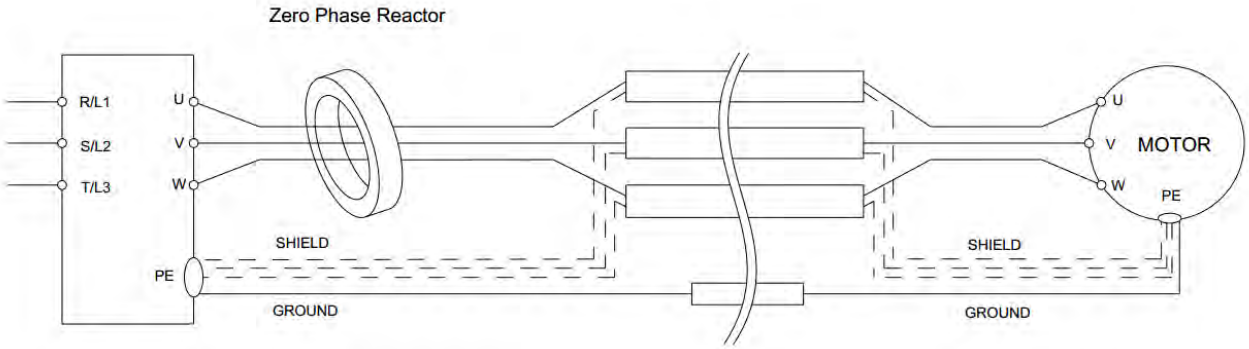

Figure 7-40

Diagram C

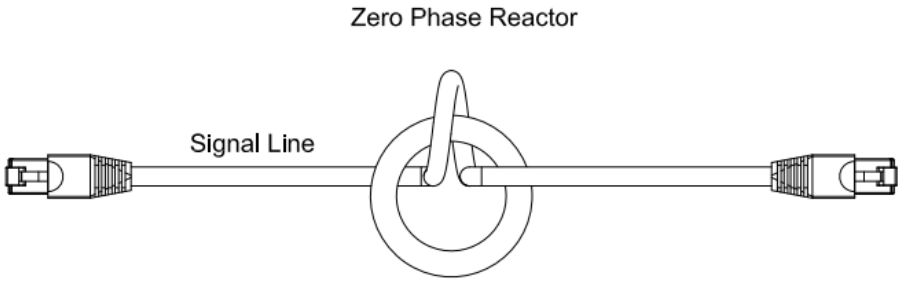

Figure 7-41

Diagram D

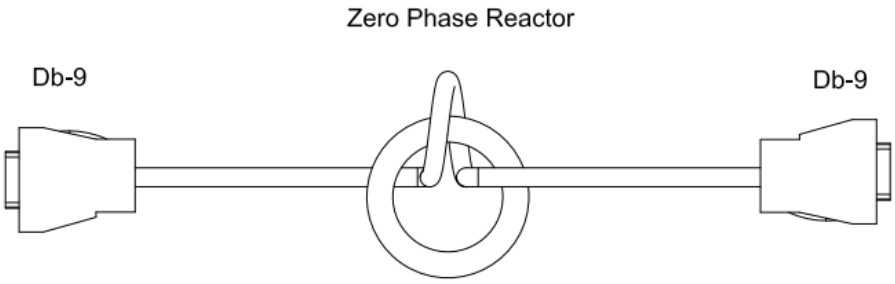

Figure 7-42

Diagram E

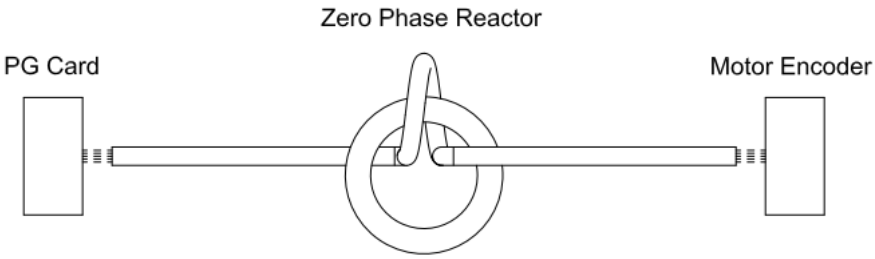

Figure 7-43

NOTE:

1. The table above gives approximate wire size for the zero phase reactors but the selection is ultimately governed by the type and diameter of cable fitted, i.e. the cable must fit through the center hole of zero phase reactors.
2. Only the phase conductors should pass through, not the earth core or screen.
3. For the zero phase reactor used for signal cables, it is recommended to install near to the driver and well fixed, as to prevent vibration and pulling of the cable.

Model*	Recommended Wire Size	Wiring Method	Q'ty	Applicable Cables
T60006L2050W565	≤ 1 AWG	Diagram D	1	D-sub
T60006L2040W453	≤ 8 AWG	Diagram C	1	Category 5e shielding, Shielded twisted pair cable, CAN standard cable (TAP-CB05, TAP-CB10)
T60004L2025W622	≤ 10 AWG	Diagram E	1	PG card signal cable
T60004L2016W620	≤ 12 AWG	Diagram E	1	PG card signal cable

Table 7-52

NOTE:

1. The table above is for reference only, select the zero phase reactor based on the actual wire size that you are using.
2. Some of the cables are recommended to select bigger zero phase reactors due to its corresponded mechanical size.

Recommended max. motor wire size of zero phase reactor (included LUG width and temperature tolerance of motor cable)

Zero Phase Reactor	Available Max. Wire Size / LUG Width	Available Max. AWG (1C*3)		Available Max. AWG (4C*1)	
		75C	90C	75C	90C
RF008X00A	13 MM	3 AWG	1 AWG	3 AWG	1 AWG
RF004X00A	16 MM	1 AWG	2/0 AWG	1 AWG	1/0 AWG
RF002X00A	36 MM	600 MCM	600 MCM	1 AWG	1/0 AWG
RF300X00A	73 MM	650 MCM	650 MCM	300 MCM	300 MCM
T60006L2040W453	11 MM	9 AWG	4 AWG	6 AWG	6 AWG
T60006L2050W565	16 MM	1 AWG	2/0 AWG	1 AWG	1/0 AWG
T60006L2160V066	57 MM	600 MCM	600 MCM	300 MCM	300 MCM

Table 7-53

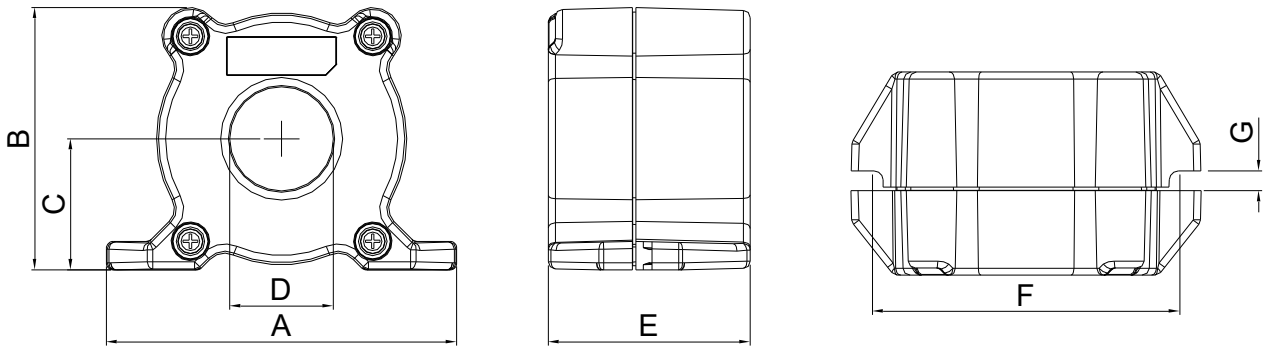

Figure 7-44

Unit: mm(inch)

Model	A	B	C	D	E	F	G(Ø)	Torque
RF008X00A	98 (3.858)	73 (2.874)	36.5 (1.437)	29 (1.142)	56.5 (2.224)	86 (3.386)	5.5 (0.217)	< 10 kgf/cm^2
RF004X00A	110 (4.331)	87.5 (3.445)	43.5 (1.713)	36 (1.417)	53 (2.087)	96 (3.780)	5.5 (0.217)	< 10 kgf/cm^2

Table 7-54

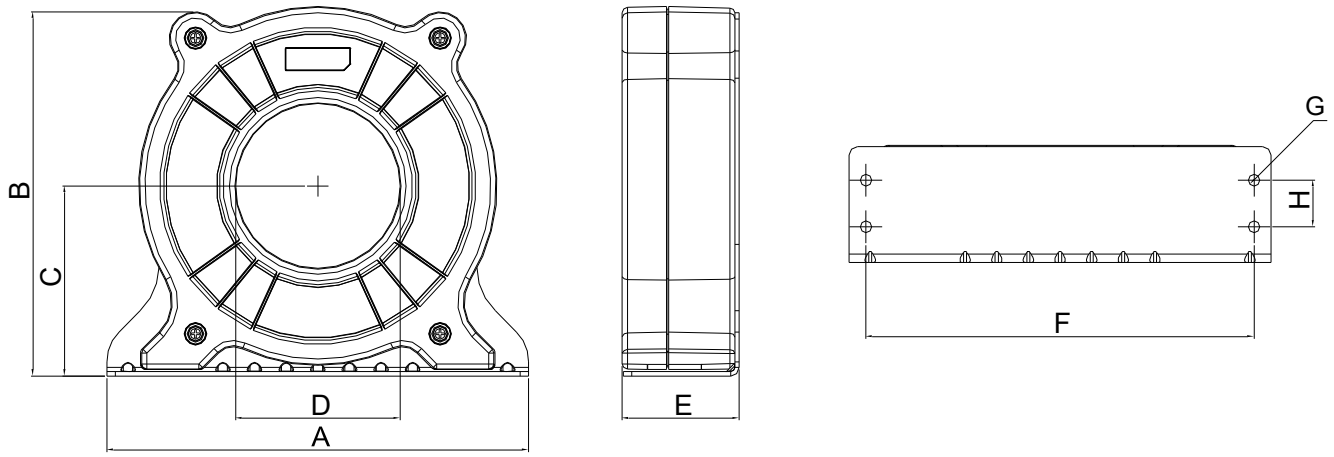

Figure 7-45

Unit: mm(inch)

Model	A	B	C	D	E	F	G(Ø)	H	Torque
RF002X00A	200 (7.874)	172.5 (6.791)	90 (3.543)	78 (3.071)	55.5 (2.185)	184 (7.244)	5.5 (0.217)	22 (0.866)	< 45 kgf/cm^2

Table 7-55

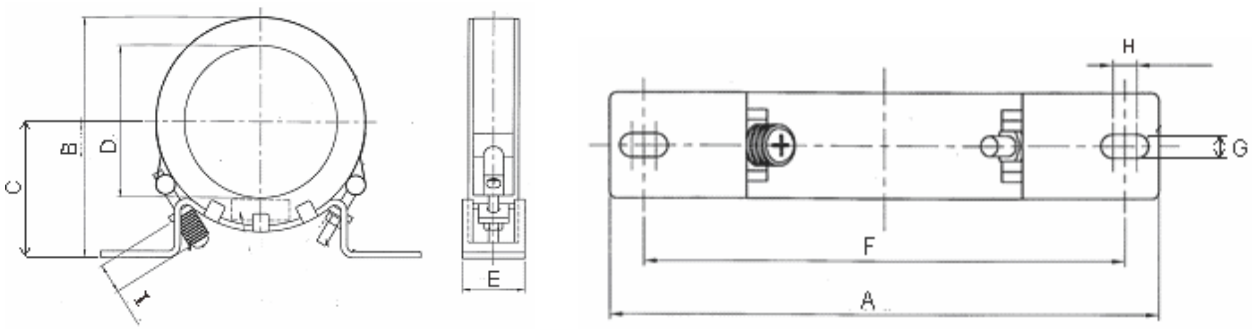

Figure 7-46

Unit: mm(inch)

Model	A	B	C	D	E	F	G(Ø)	H	I
RF300X00A	241 (9.488)	217 (8.543)	114 (4.488)	155 (6.102)	42 (1.654)	220 (8.661)	6.5 (0.256)	7.0 (0.276)	20 (0.787)

Table 7-56

Magnetic Ring

Model number: T60006-L2040-W453

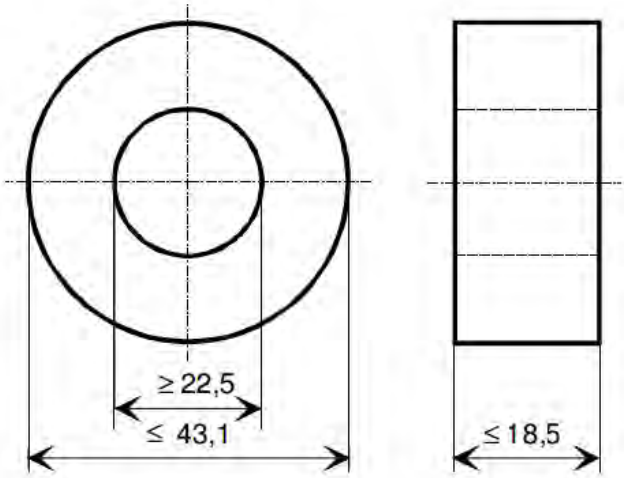

Unit: mm

Figure 7-47

Model number: T60006-L2050-W565

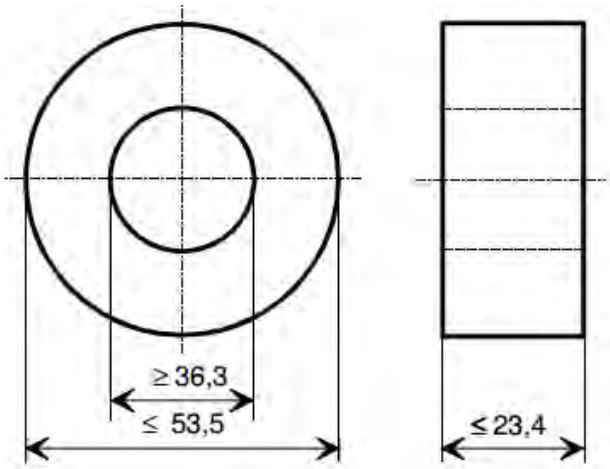

Unit: mm

Figure 7-48

Model number: T60006-L2160-V066

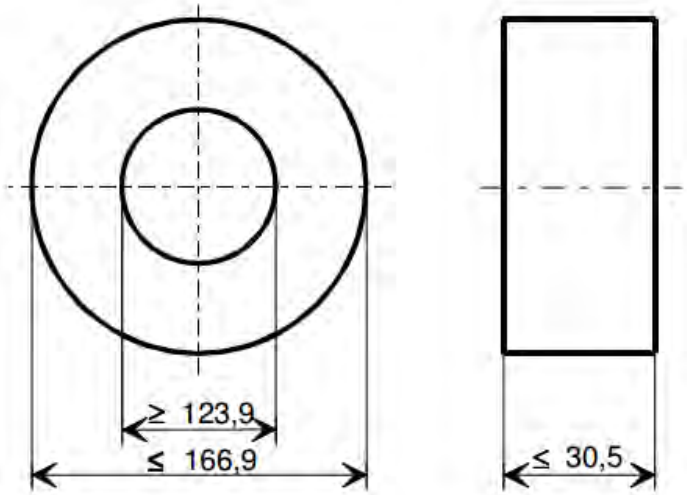

Unit: mm

Figure 7-49

Model number: T60004-L2016-W620

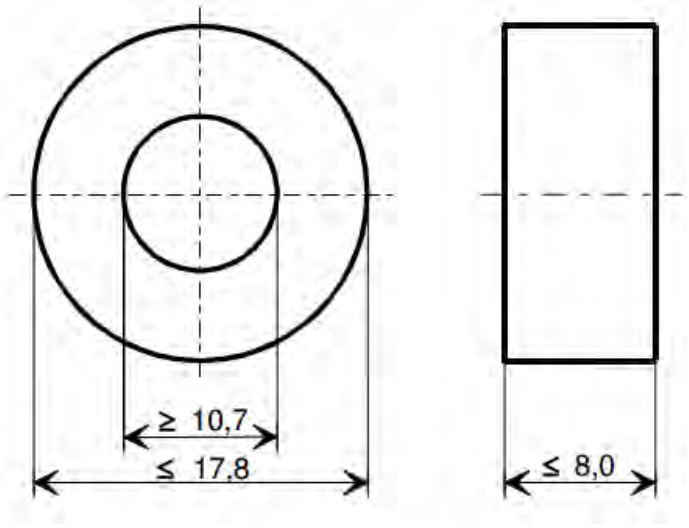

Unit: mm

Figure 7-50

Model number: T60004-L2025-W622

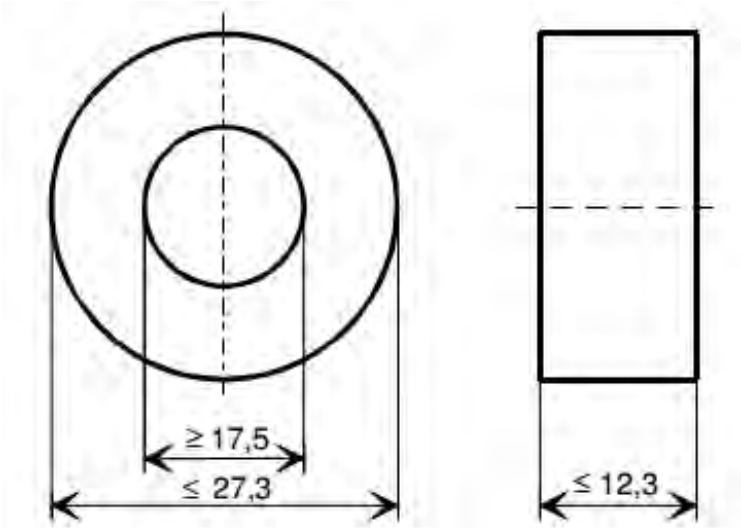

Unit: mm

Figure 7-51

7-6 EMC Filter

Following table is the external EMC filter of CH2000 series, user can choose corresponding zero phase reactor and suitable shielded cable length in accord to required noise emission and electromagnetic interference level to have the best configuration to suppress the electromagnetic interference. When the application does not consider RE and only needs CE to comply with C2 or C1, there is no need to install zero phase reactor in input side.

230V Models

CH2000			Filter Model Name	Zero Phase Reactor		Fc	Conducted Emission (CE)		Radiation Emission (RE)
Frame	Model	Rated Input Current (A)		Input Side (R / S / T)	Output Side (U / V / W)		Output Shielded Cable Length		EN61800-3
							C2	C1	
A	VFD007CH23A-21	6.4	EMF021A23A	RF008X00A or T60006L2040W453	RF008X00A or T60006L2040W453	≤8kHz	100m	50m	C2
	VFD015CH23A-21	12							
	VFD022CH23A-21	16							
	VFD037CH23A-21	20							
B	VFD055CH23A-21	28	EMF056A23A	RF004X00A or T60006L2050W565	RF004X00A or T60006L2050W565				
	VFD075CH23A-21	36							
	VFD110CH23A-21	52							
C	VFD150CH23A-21	72	KMF3100A	RF002X00A or T60006L2160V066	RF002X00A or T60006L2160V066	≤6kHz			
	VFD185CH23A-21	83							
D	VFD220CH23A-00 VFD220CH23A-21	99							
	VFD300CH23A-00 VFD300CH23A-21	124	B84143D0150R127	N/A					
	VFD370CH23A-00 VFD370CH23A-21	143							
E	VFD450CH23A-00 VFD450CH23A-21	171	B84143B0250S020		RF300X00A or T60006L2160V066	≤4kHz			
	VFD550CH23A-00 VFD550CH23A-21	206							
F	VFD750CH23A-00 VFD750CH23A-21	245							

Table 7-57

460V Models

CH2000			Filter Model Name	Zero Phase Reactor		Fc	Conducted Emission (CE)		Radiation Emission (RE)
Frame	Model	Rated Input Current (A)		Input Side (R / S / T)	Output Side (U / V / W)		Output Shielded Cable Length		EN61800-3
							C2	C1	
A	VFD007CH43A-21	4.3	EMF014A43A	RF008X00A or T60006L2040W453	RF008X00A or T60006L2040W453	≤8 kHz	100 m	50 m	C2
	VFD015CH43A-21	5.9							
	VFD022CH43A-21	8.7							
	VFD037CH43A-21	14	EMF018A43A						
	VFD040CH43A-21	15.5							
	VFD055CH43A-21	17							
B	VFD075CH43A-21	20	EMF039A43A	RF004X00A or T60006L2050W565	RF004X00A or T60006L2050W565				
	VFD110CH43A-21	26							
	VFD150CH43A-21	35							
C	VFD185CH43A-21	40	KMF370A	RF002X00A or T60006L2160V066	RF002X00A or T60006L2160V066	≤6 kHz			
	VFD220CH43A-21	47							
	VFD300CH43A-21	63							
D0	VFD370CH43S-00 VFD370CH43S-21 VFD370CH43L-00	74	B84143D0150R127	N/A					

<table>
<tr><th colspan="3">CH2000</th><th rowspan="3">Filter Model Name</th><th colspan="2">Zero Phase Reactor</th><th rowspan="3">Fc</th><th colspan="2">Conducted Emission (CE)</th><th rowspan="2">Radiation Emission (RE)</th></tr>
<tr><th rowspan="2">Frame</th><th rowspan="2">Model</th><th rowspan="2">Rated Input Current (A)</th><th rowspan="2">Input Side (R / S / T)</th><th rowspan="2">Output Side (U / V / W)</th><th colspan="2">Output Shielded Cable Length</th><th rowspan="2">EN61800-3</th></tr>
<tr><th>C2</th><th>C1</th></tr>
<tr><td rowspan="3">D</td><td>VFD450CH43A-00
VFD450CH43A-21
VFD450CH43L-00</td><td>101</td><td></td><td></td><td></td><td></td><td></td><td></td><td></td></tr>
<tr><td>VFD550CH43A-00
VFD550CH43A-21
VFD550CH43L-00</td><td>114</td><td rowspan="2">B84143D0150R127</td><td rowspan="9">N/A</td><td rowspan="2">RF002X00A
or
T60006L2160V066</td><td>≤6 kHz</td><td rowspan="9">100 m</td><td rowspan="8">50 m</td><td rowspan="9">C2</td></tr>
<tr><td>VFD750CH43A-00
VFD750CH43A-21</td><td>157</td><td rowspan="8">≤4 kHz</td></tr>
<tr><td rowspan="2">E</td><td>VFD900CH43A-00
VFD900CH43A-21</td><td>167</td><td rowspan="2">B84143D0200R127</td><td rowspan="7">RF300X00A
or
T60006L2160V066</td></tr>
<tr><td>VFD1100CH43A-00
VFD1100CH43A-21</td><td>207</td></tr>
<tr><td>F</td><td>VFD1320CH43A-00
VFD1320CH43A-21</td><td>240</td><td rowspan="4">MIF3400B</td></tr>
<tr><td rowspan="3">G</td><td>VFD1600CH43A-00
VFD1600CH43A-21</td><td>300</td></tr>
<tr><td>VFD1850CH43A-00
VFD1850CH43A-21</td><td>380</td></tr>
<tr><td>VFD2200CH43A-00
VFD2200CH43A-21</td><td>400</td></tr>
<tr><td rowspan="4">H</td><td>VFD2800CH43A-00
VFD2800CH43C-21</td><td>494</td><td>MIF3800</td><td></td><td></td><td></td><td></td></tr>
<tr><td>VFD3150CH43A-00
VFD3150CH43C-21</td><td>555</td><td rowspan="3">B84143B1000S020</td><td rowspan="3">RF300X00A
or
T60006L2160V066</td><td rowspan="3">RF300X00A
or
T60006L2160V066</td><td rowspan="3">N/A</td></tr>
<tr><td>VFD3550CH43A-00
VFD3550CH43C-21</td><td>625</td></tr>
<tr><td>VFD4500CH43A-00
VFD4500CH43C-21</td><td>866</td></tr>
</table>

Table 7-58

<table>
<tr><th colspan="3">CH2000</th><th rowspan="3">Filter Model Name</th><th colspan="2">Zero Phase Reactor</th><th rowspan="3">Fc</th><th colspan="2">Conducted Emission (CE)</th><th rowspan="2">Radiation Emission (RE)</th></tr>
<tr><th rowspan="2">Frame</th><th rowspan="2">Model</th><th rowspan="2">Rated Input Current (A)</th><th rowspan="2">Input Side (R / S / T)</th><th rowspan="2">Output Side (U / V / W)</th><th colspan="2">Shielded Cable Length</th><th rowspan="2">EN61800-3</th></tr>
<tr><th colspan="2">EN618000-3 C2</th></tr>
<tr><td>D0</td><td>VFD370CH43S-00
VFD370CH43S-21
VFD370CH43L-00</td><td>74</td><td rowspan="2">B84143B0120R110</td><td rowspan="13">N/A</td><td rowspan="2">N/A</td><td rowspan="2">≤6 kHz</td><td rowspan="2">25 m</td><td rowspan="2">*C2</td></tr>
<tr><td rowspan="3">D</td><td>VFD450CH43A-00
VFD450CH43A-21
VFD450CH43L-00</td><td>101</td></tr>
<tr><td>VFD550CH43A-00
VFD550CH43A-21
VFD550CH43L-00</td><td>114</td><td rowspan="2">B84143B0180S020</td><td rowspan="8">RF300X00A
or
T60006L2160V066</td><td rowspan="4">≤4 kHz</td><td rowspan="8">13 m</td><td rowspan="2">*C3</td></tr>
<tr><td>VFD750CH43A-00
VFD750CH43A-21
VFD750CH43L-00</td><td>157</td></tr>
<tr><td rowspan="2">E</td><td>VFD900CH43A-00
VFD900CH43A-21</td><td>167</td><td rowspan="2">B84143B0250S020</td><td rowspan="6">C2</td></tr>
<tr><td>VFD1100CH43A-00
VFD1100CH43A-21</td><td>207</td></tr>
<tr><td>F</td><td>VFD1320CH43A-00
VFD1320CH43A-21</td><td>240</td><td rowspan="2">B84143B0400S020</td></tr>
<tr><td rowspan="3">G</td><td>VFD1600CH43A-00
VFD1600CH43A-21</td><td>300</td></tr>
<tr><td>VFD1850CH43A-00
VFD1850CH43A-21</td><td>380</td><td rowspan="2">B84143B0600S020</td><td rowspan="3">≤2 kHz</td></tr>
<tr><td>VFD2200CH43A-00
VFD2200CH43A-21</td><td>400</td></tr>
<tr><td>H</td><td>VFD2800CH43A-00
VFD2800CH43C-21</td><td>494</td><td>B84143B1000S020</td><td>*C3</td></tr>
</table>

*For Radiated Emission, place the drive inside a cabinet.

Table 7-59

<table>
<tr><th colspan="3">CH2000</th><th rowspan="3">Filter Model Name</th><th colspan="2">Zero Phase Reactor</th><th rowspan="3">Fc</th><th>Conducted Emission (CE)</th><th>Radiation Emission (RE)</th></tr>
<tr><th rowspan="2">Frame</th><th rowspan="2">Model</th><th rowspan="2">Rated Input Current (A)</th><th rowspan="2">Input Side (R / S / T)</th><th rowspan="2">Output Side (U / V / W)</th><th>Shielded Cable Length</th><th rowspan="2">EN61800-3</th></tr>
<tr><th>EN618000-3 C3</th></tr>
<tr><td rowspan="2">D0</td><td>VFD370CH43S-00
VFD370CH43S-21
VFD370CH43L-00</td><td>74</td><td rowspan="2">B84143A0120R105</td><td rowspan="15">N/A</td><td rowspan="15">N/A</td><td rowspan="7">≤6 kHz</td><td rowspan="12">150 m</td><td rowspan="3">C3</td></tr>
<tr><td rowspan="3">D</td><td>VFD450CH43A-00
VFD450CH43A-21
VFD450CH43L-00</td><td>101</td></tr>
<tr><td>VFD550CH43A-00
VFD550CH43A-21
VFD550CH43L-00</td><td>114</td><td rowspan="2">B84143B0180S080</td><td rowspan="4">*C3</td></tr>
<tr><td>VFD750CH43A-00
VFD750CH43A-21
VFD750CH43L-00</td><td>157</td></tr>
<tr><td rowspan="2">E</td><td>VFD900CH43A-00
VFD900CH43A-21</td><td>167</td><td rowspan="2">B84143B0250S080</td><td rowspan="8">≤4 kHz</td><td rowspan="8">C3</td></tr>
<tr><td>VFD1100CH43A-00
VFD1100CH43A-21</td><td>207</td></tr>
<tr><td>F</td><td>VFD1320CH43A-00
VFD1320CH43A-21</td><td>240</td><td rowspan="2">B84143B0400S080</td></tr>
<tr><td rowspan="3">G</td><td>VFD1600CH43A-00
VFD1600CH43A-21</td><td>300</td></tr>
<tr><td>VFD1850CH43A-00
VFD1850CH43A-21</td><td>380</td><td rowspan="2">B84143B0600S080</td></tr>
<tr><td>VFD2200CH43A-00
VFD2200CH43A-21</td><td>400</td></tr>
<tr><td rowspan="4">H</td><td>VFD2800CH43A-00
VFD2800CH43C-21</td><td>494</td><td rowspan="4">B84143B1000S080</td><td rowspan="4">150 m</td></tr>
<tr><td>VFD3150CH43A-00
VFD3150CH43C-21</td><td>555</td></tr>
<tr><td>VFD3550CH43A-00
VFD3550CH43C-21</td><td>625</td></tr>
<tr><td>VFD4500CH43A-00
VFD4500CH43C-21</td><td>866</td></tr>
</table>

*For Radiated Emission, place the drive inside a cabinet.

Table 7-60

Zero phase reactor installation position diagram:

1. Install at the cable between the power supply and the EMC filter
2. Install at the cable between the EMC filter and the drive
3. Install at the cable between the drive and the motor

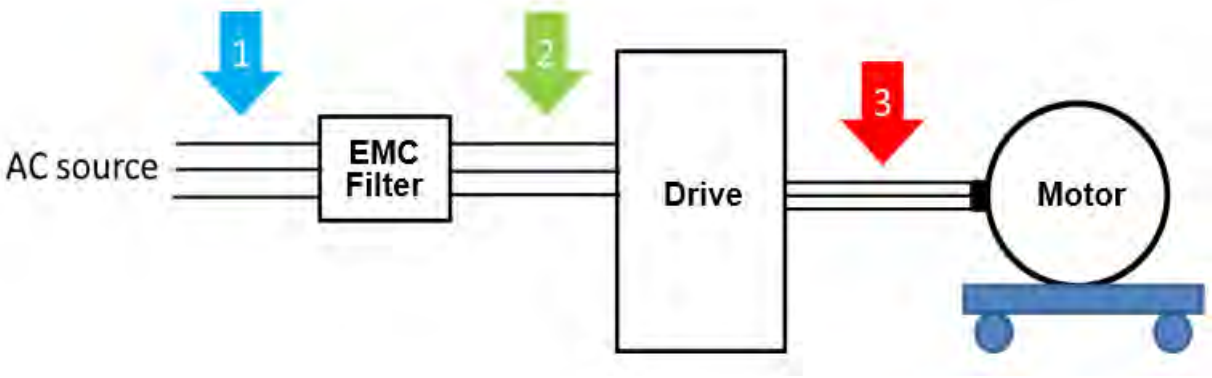

Figure 7-52

EMC Filter Dimension

Model name: EMF021A23A, EMF014A43A

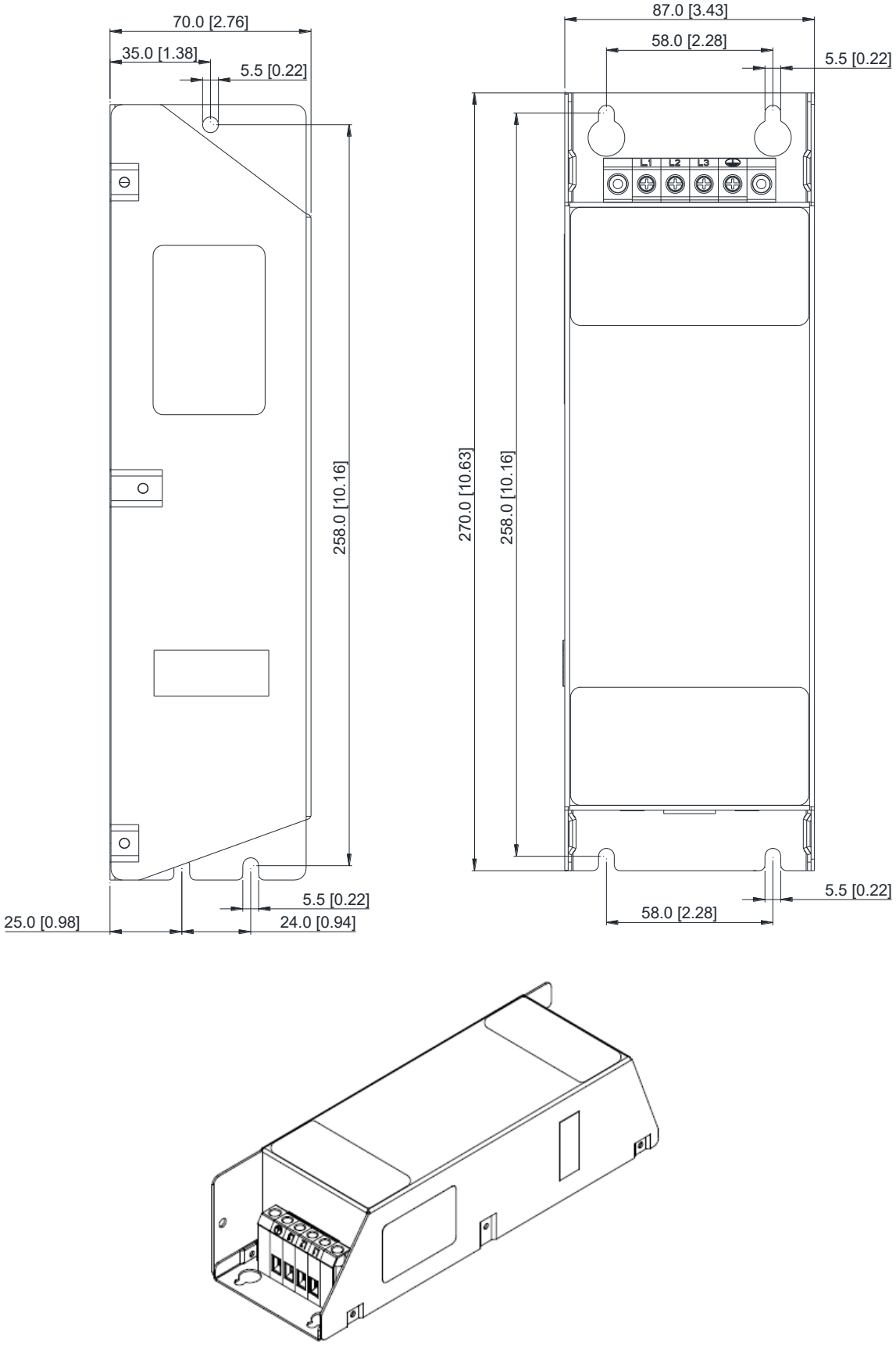

Figure 7-53

Model name: EMF018A43A, EMF014A63A, EMF027A63A

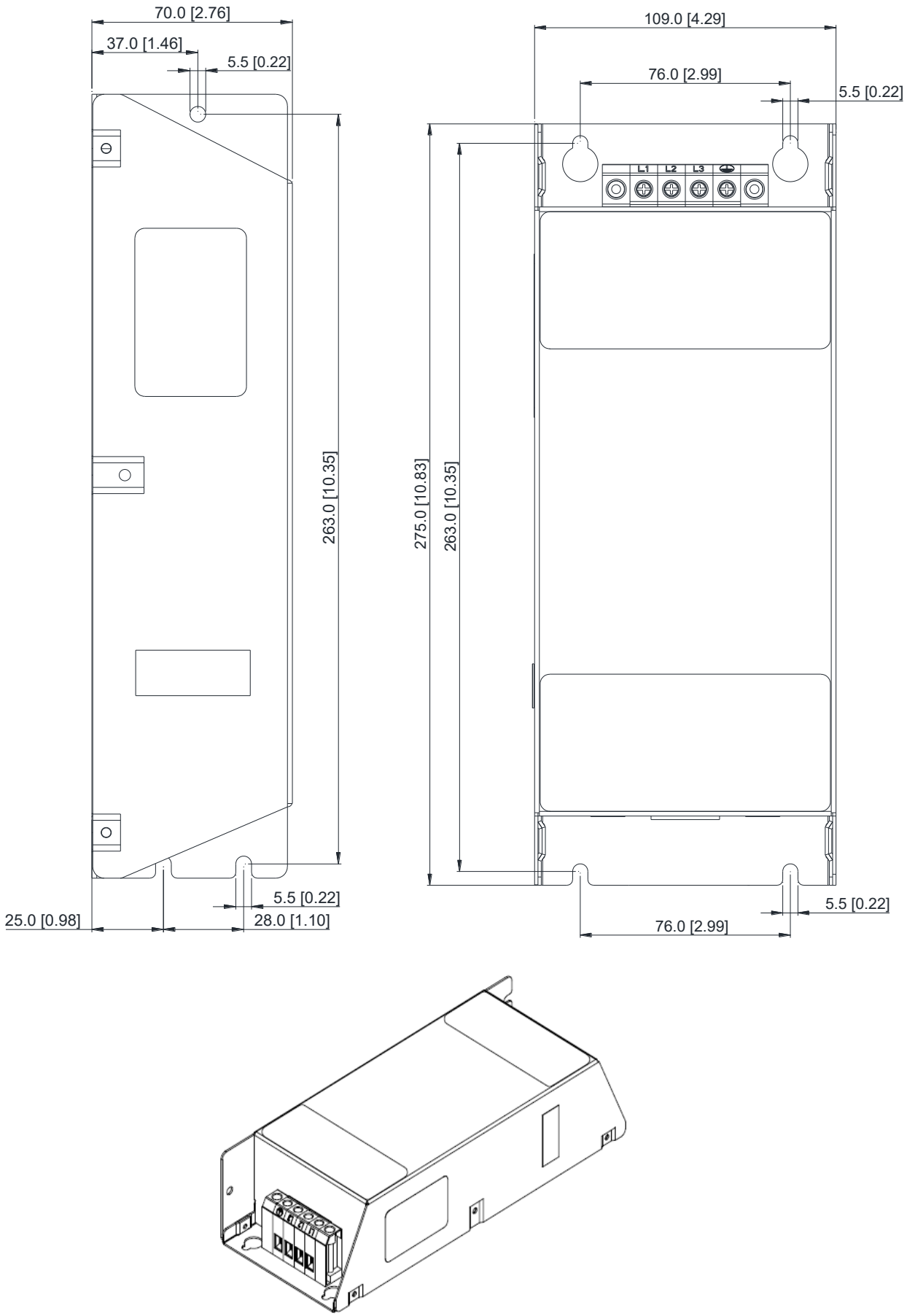

Figure 7-54

Model name: EMF056A23A, EMF039A43A

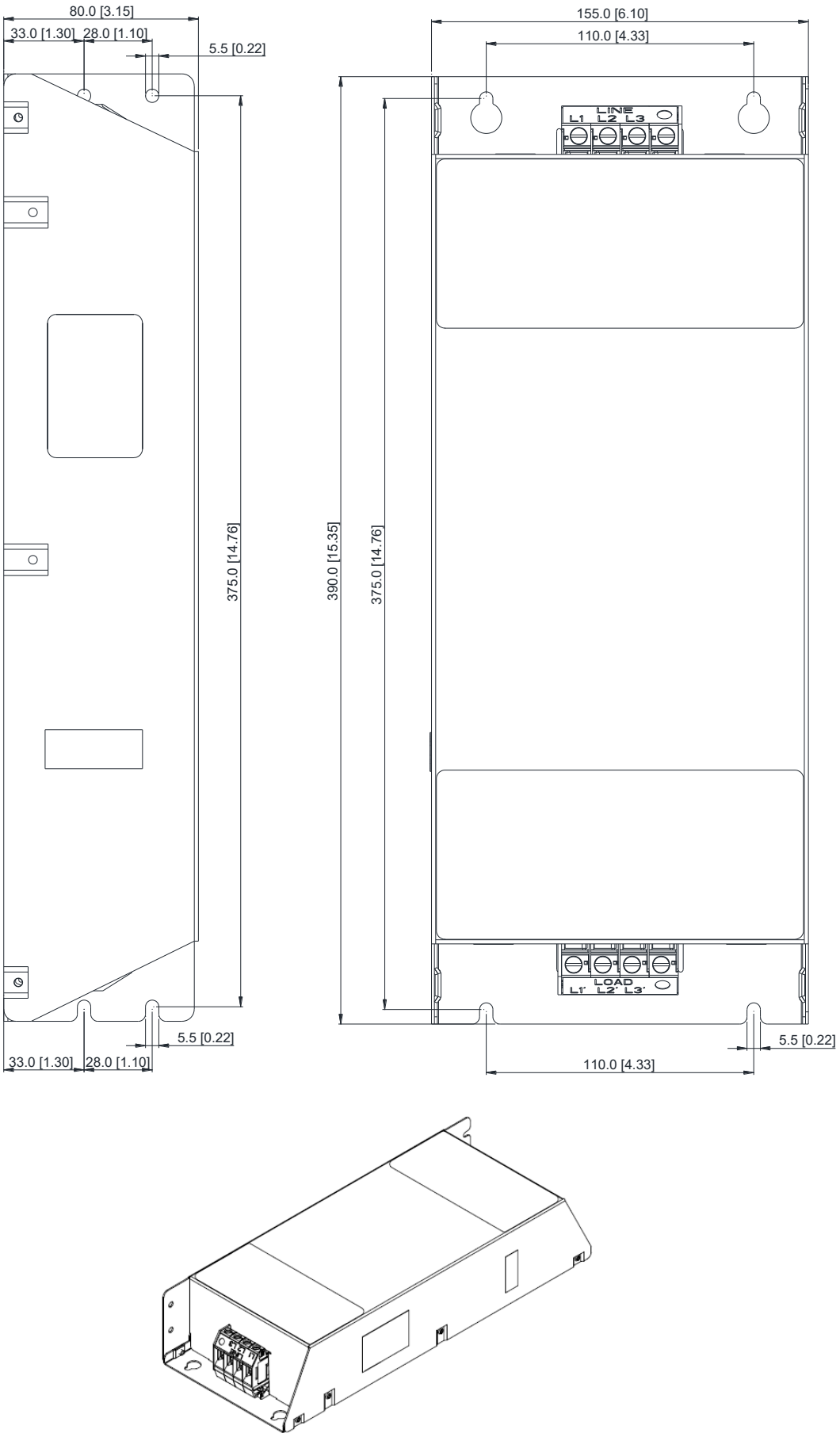

Figure 7-55

Model name: B84143A0050R021

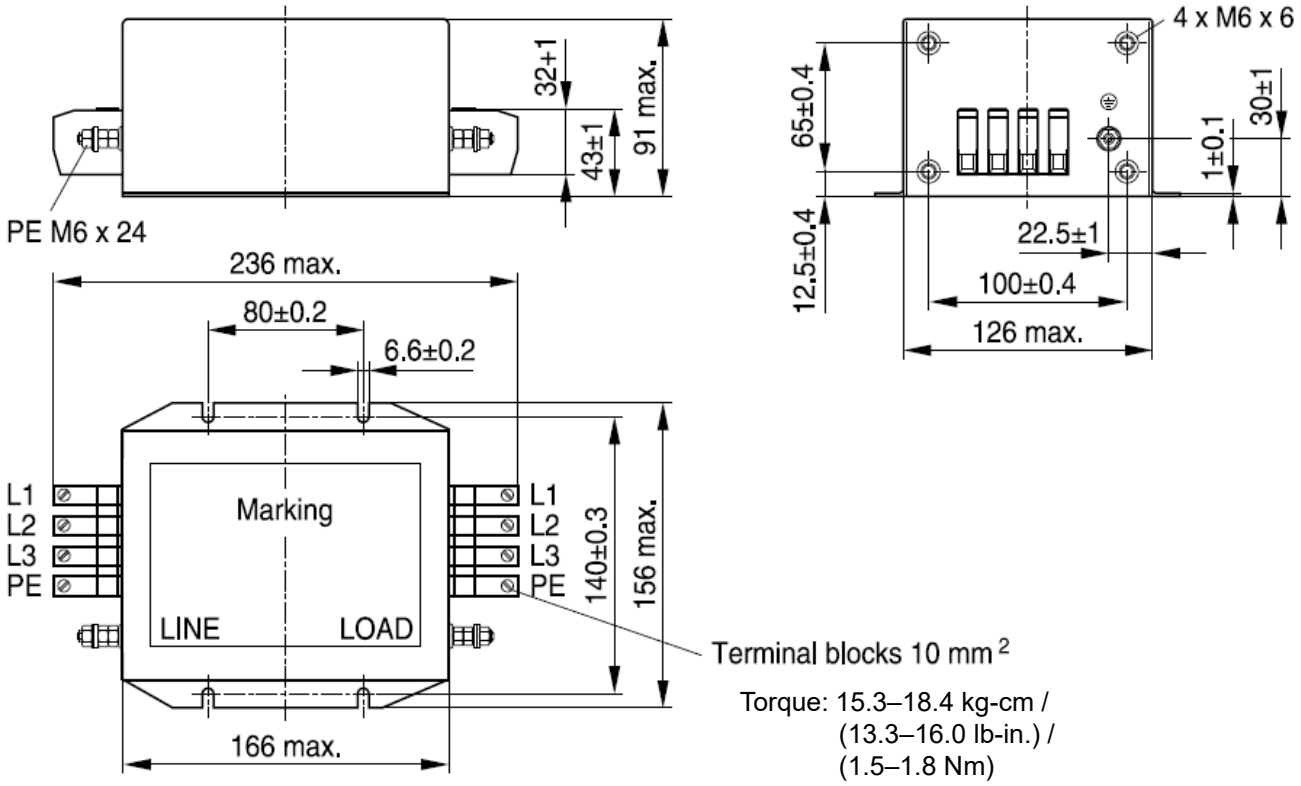

Unit: mm

Figure 7-56

Model name: B84143A0080R021

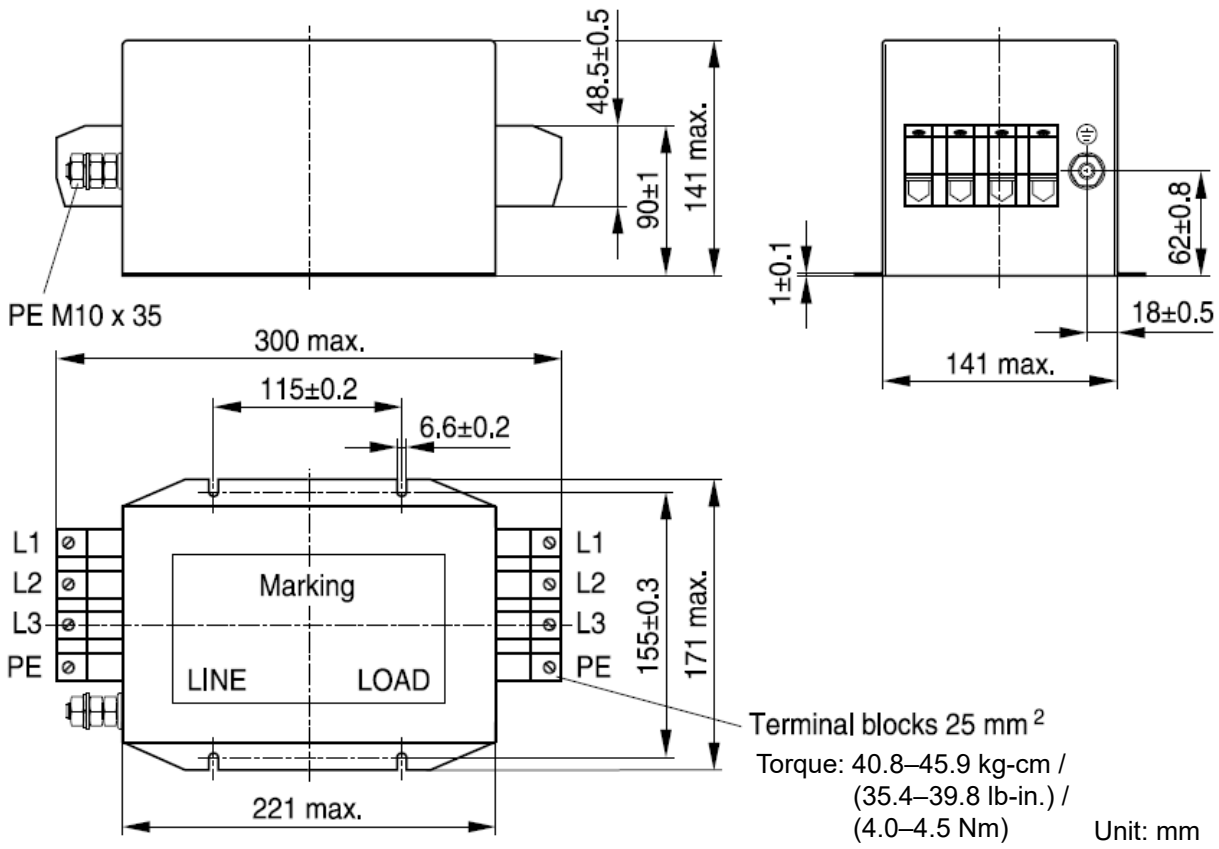

Unit: mm

Figure 7-57

Model name: B84143A0120R105

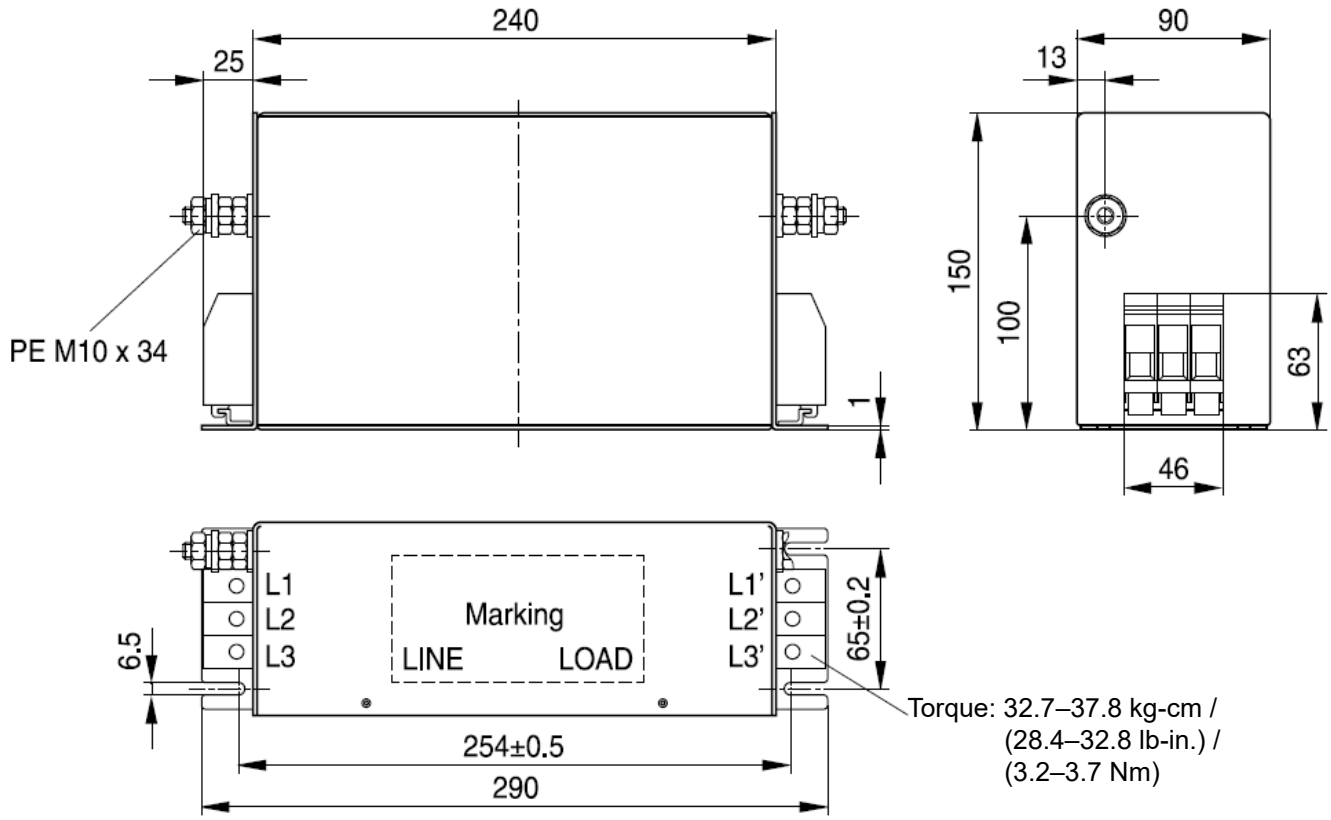

Unit: mm

Figure 7-58

Model name: B84143B0120R110

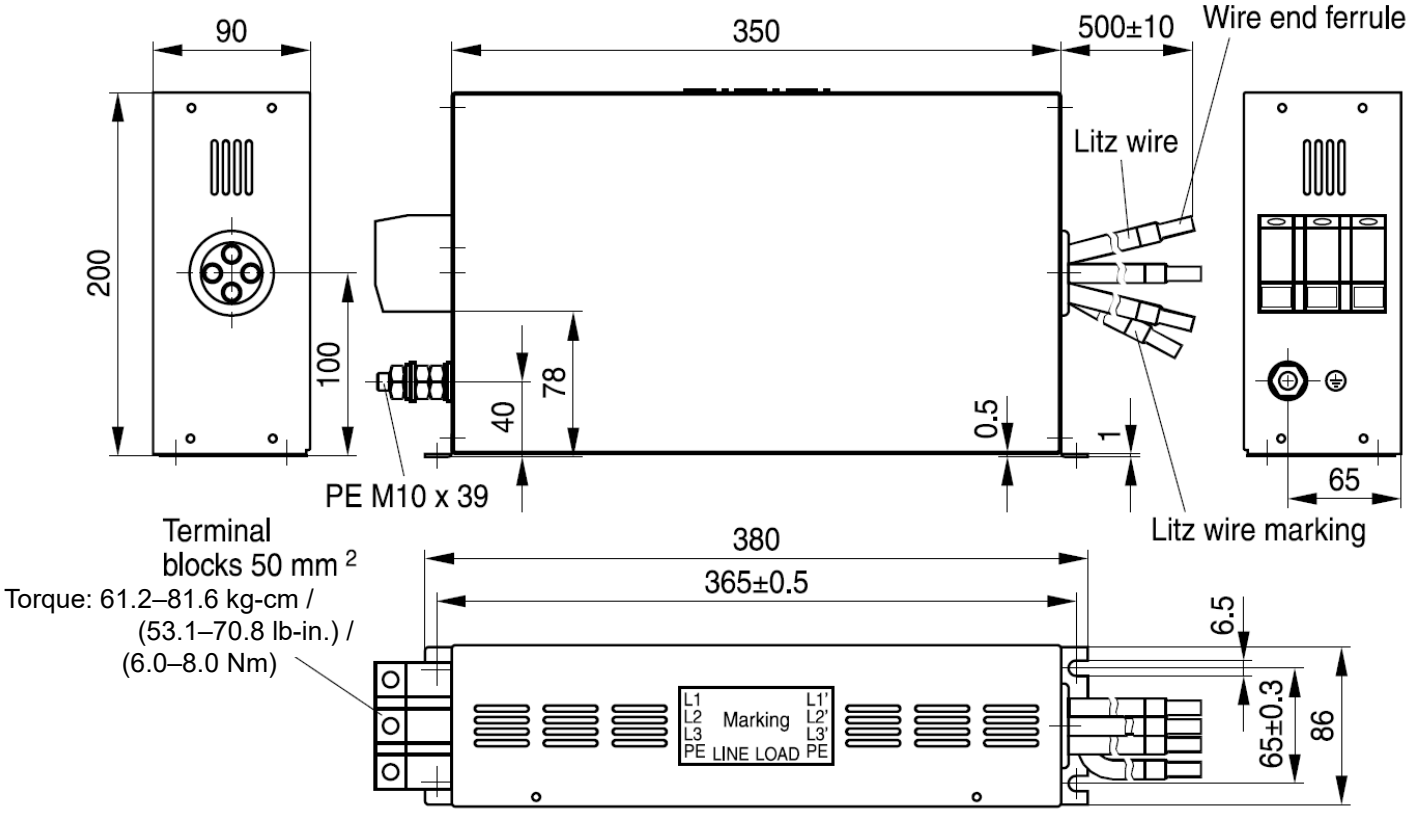

Figure 7-59

Unit: mm

Model name: B84143B0150S021, B84143B0180S020

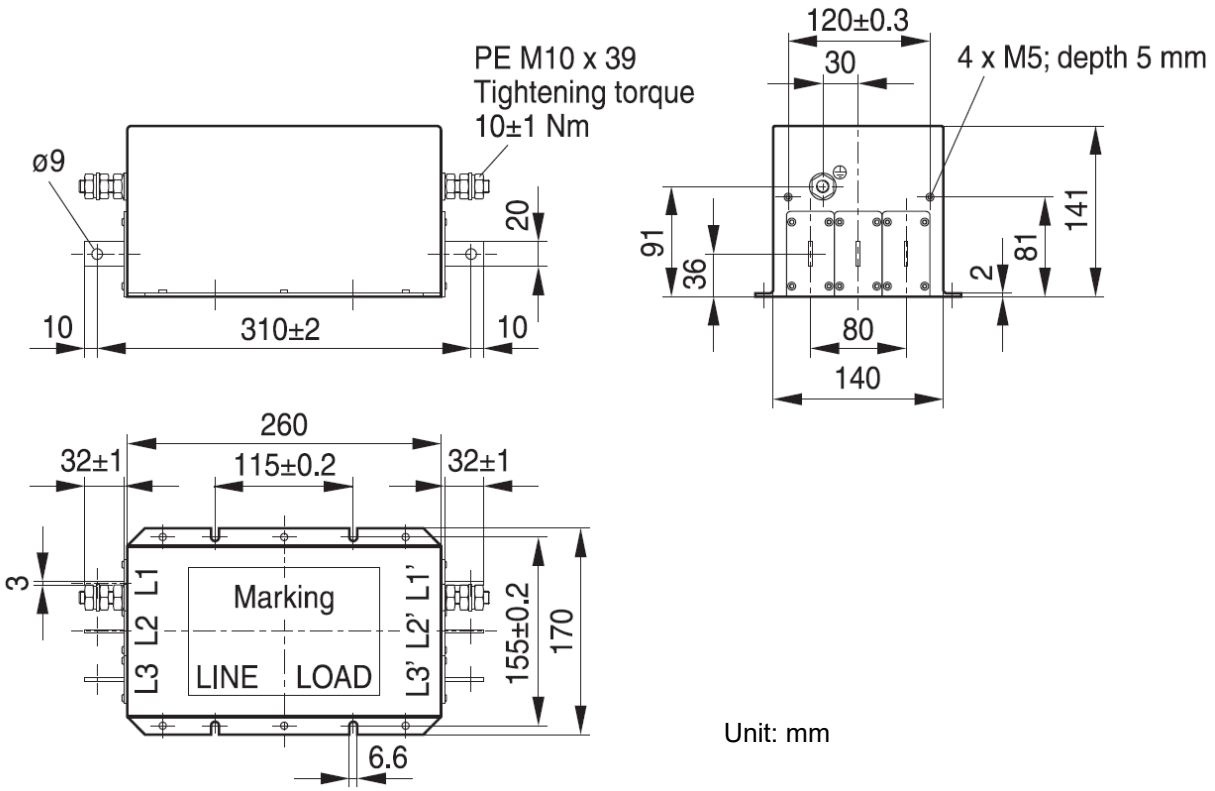

Figure 7-60

Model name: B84143B0180S080, B84143B0250S080

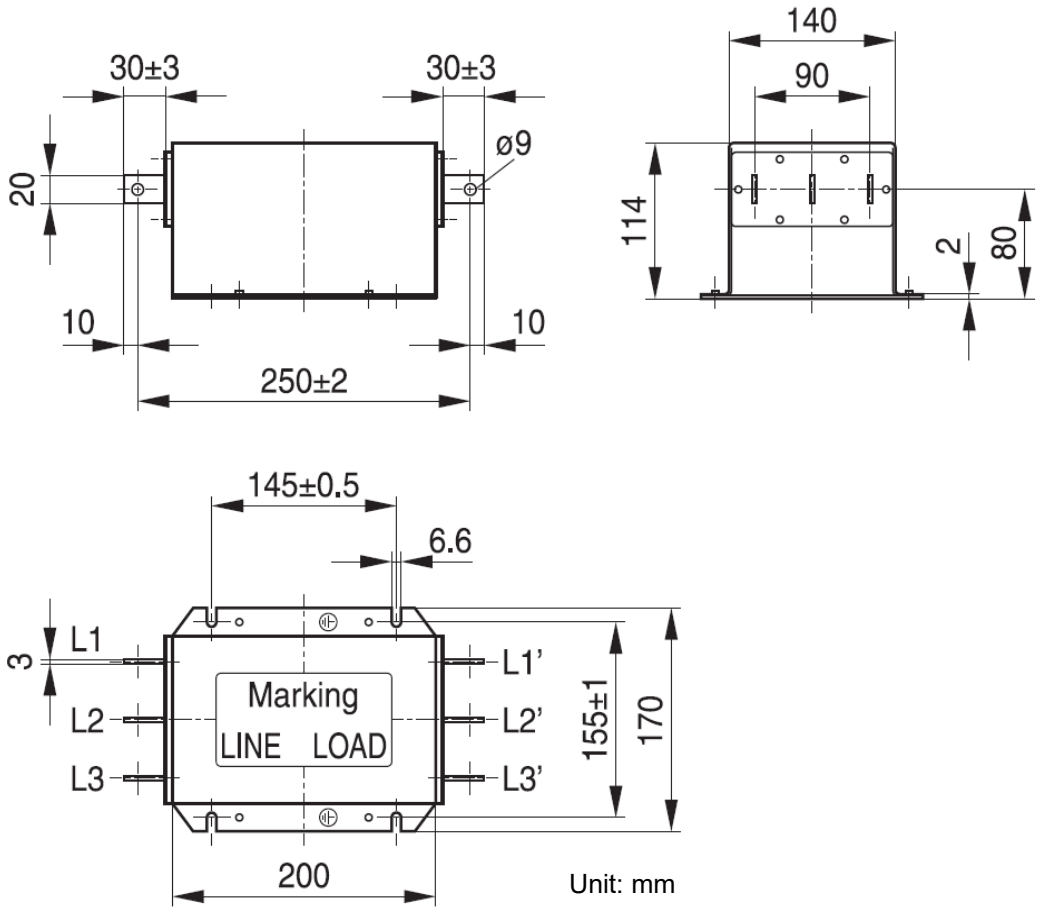

Figure 7-61

Model: B84143B0250S020, B84143B0250S021

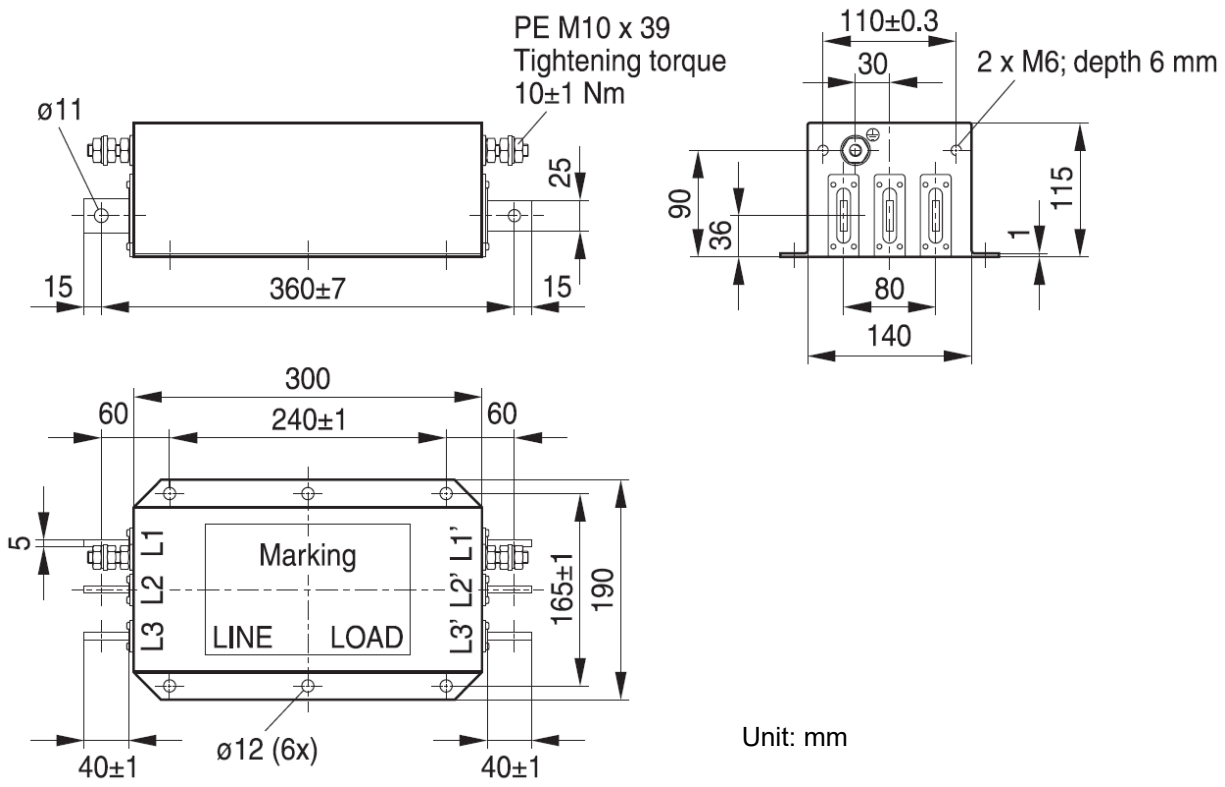

Figure 7-62

Model name: B84143B0400S020, B84143B0400S021

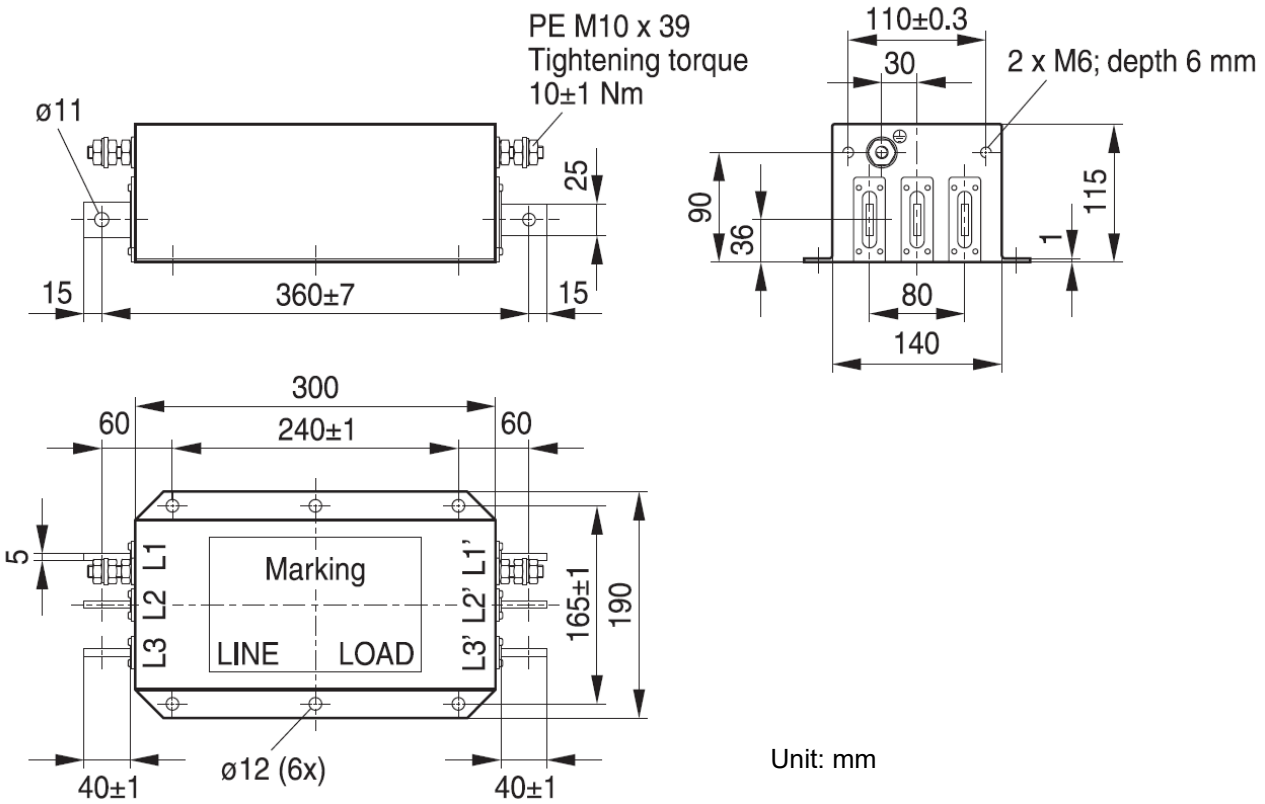

Figure 7-63

Model name: B84143B0400S080

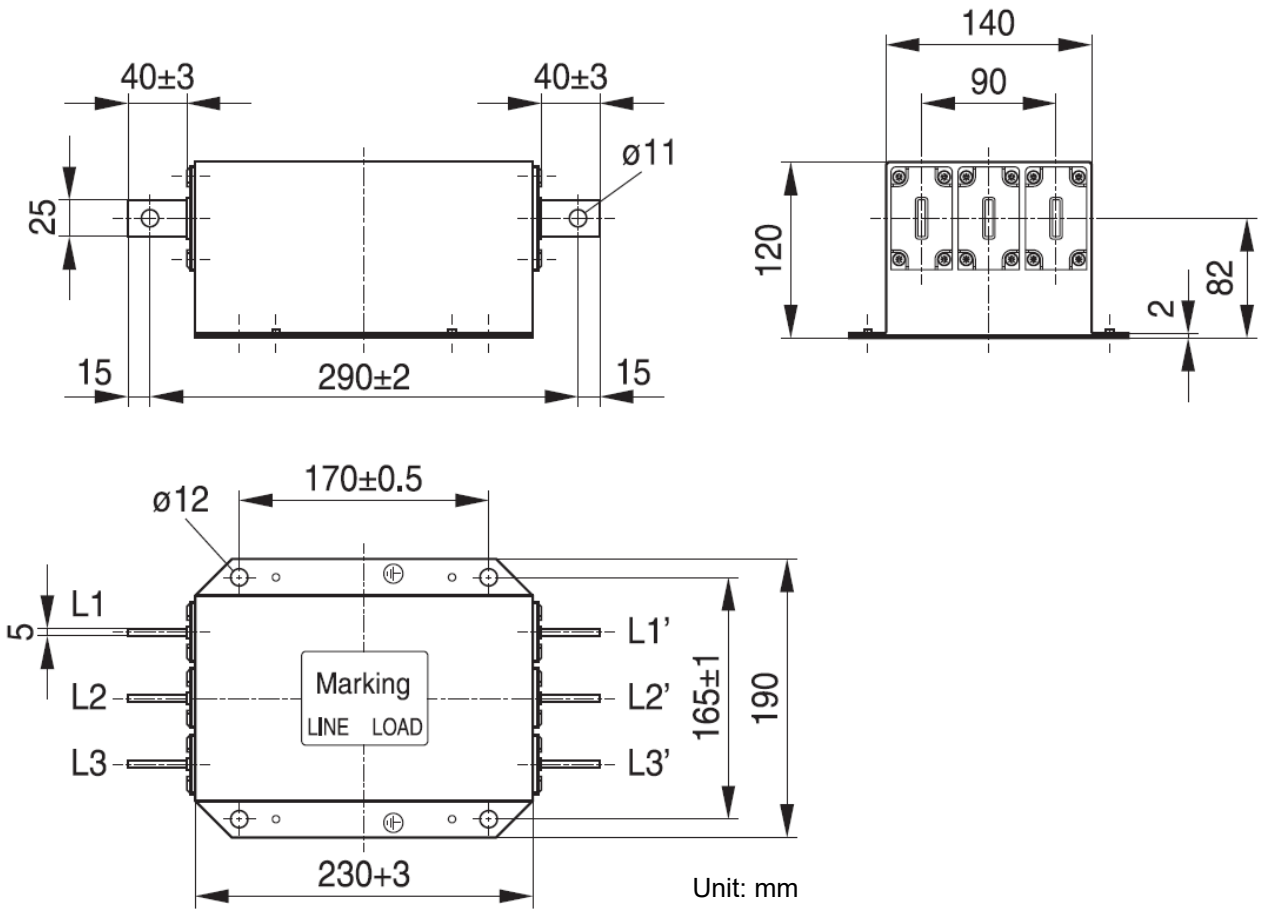

Figure 7-64

Model name: B84143B0600S020

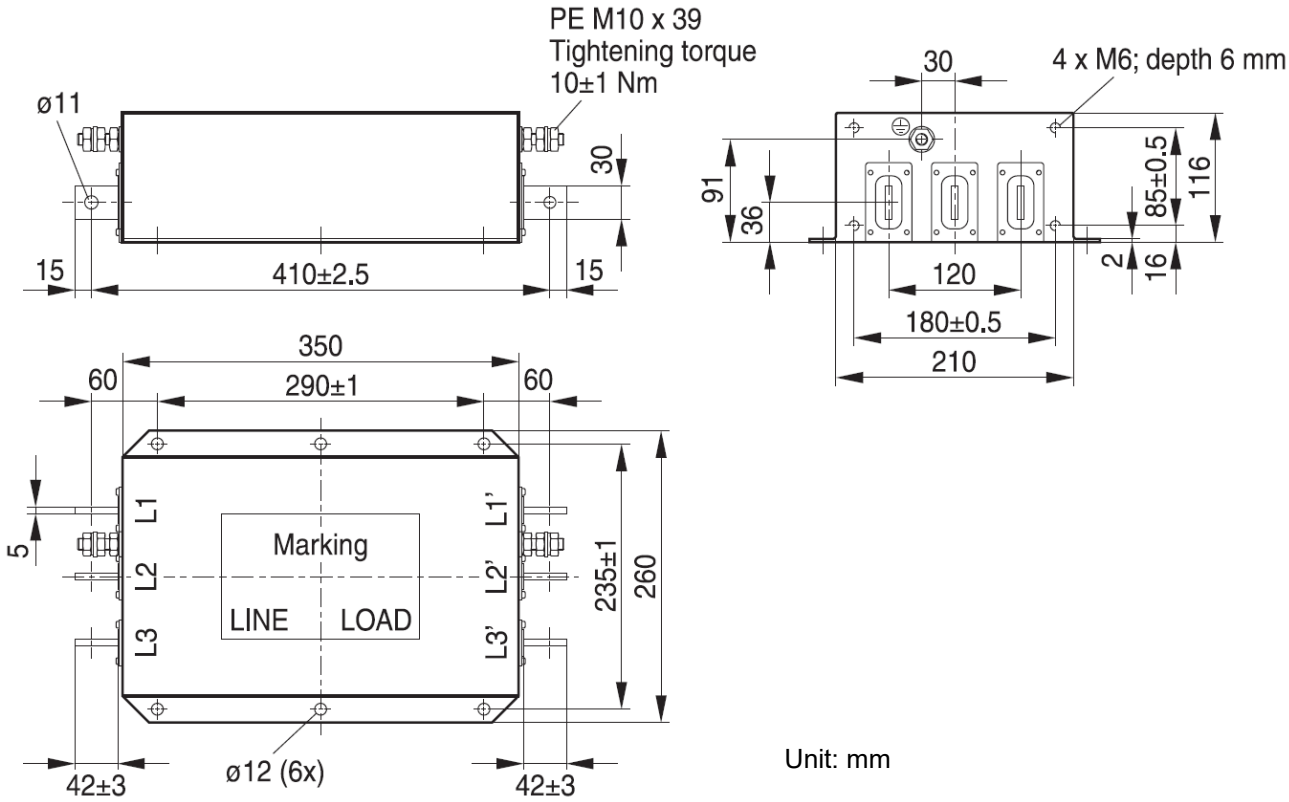

Figure 7-65

Model name: B84143B0600S080

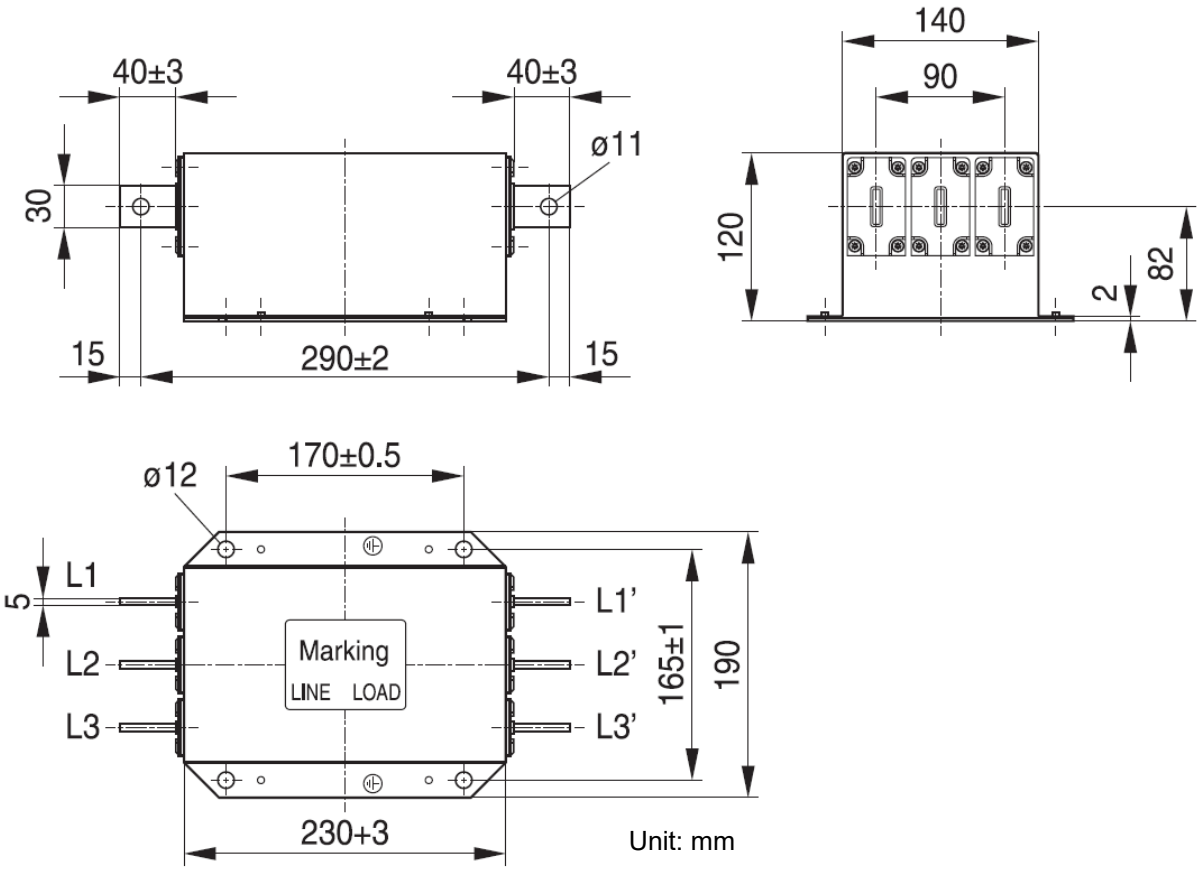

Figure 7-66

Model name: B84143B1000S020, B84143B1000S021

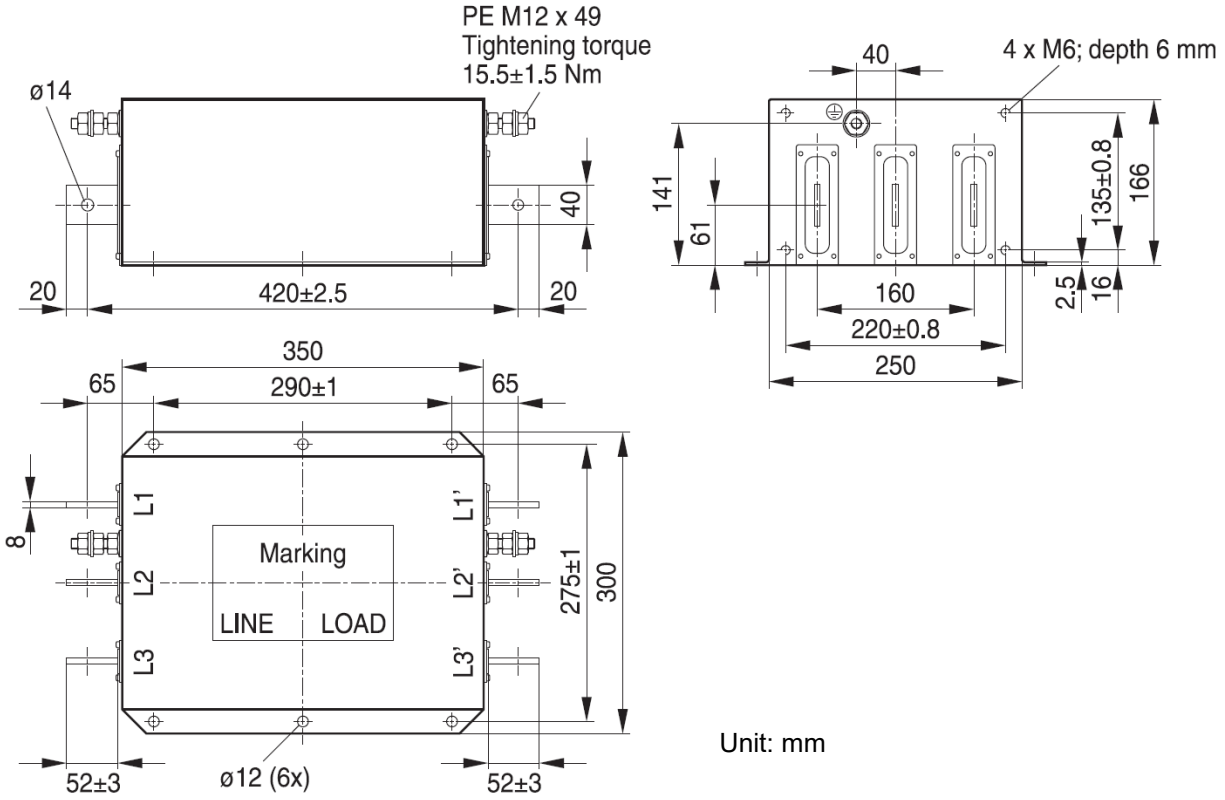

Figure 7-67

Model name: B84143B1000S080

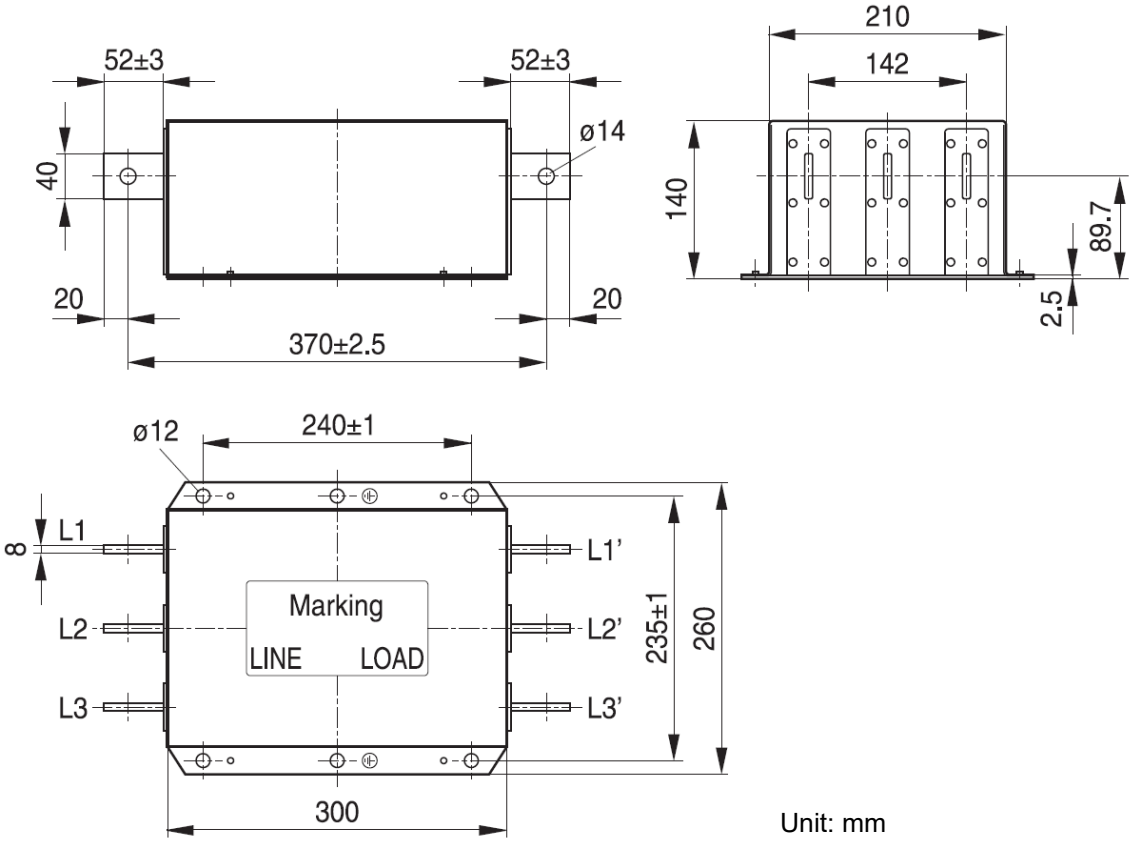

Unit: mm

Figure 7-68

Model name: B84143B1600S020

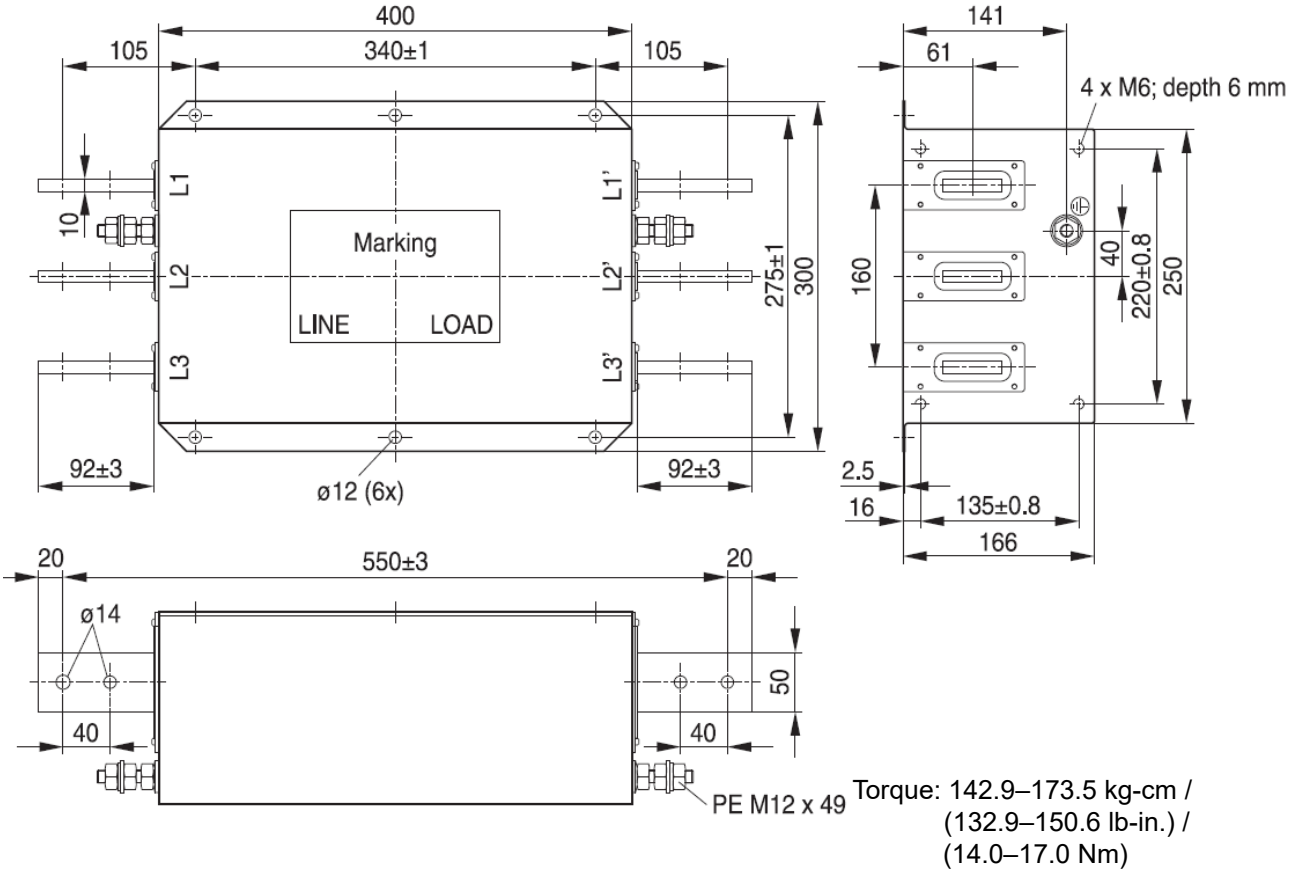

Torque: 142.9–173.5 kg-cm /
(132.9–150.6 lb-in.) /
(14.0–17.0 Nm)

Unit: mm

Figure 7-69

Model name: 84143B1600S080

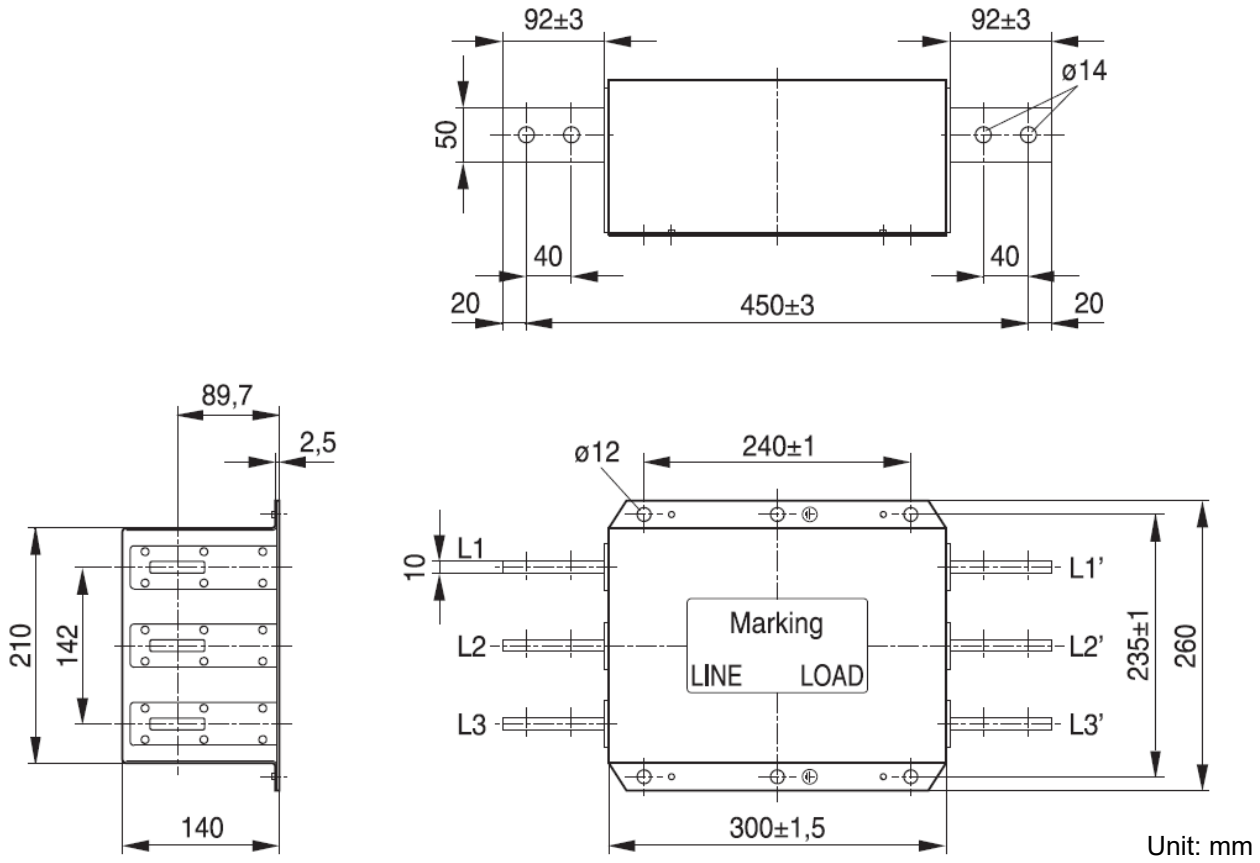

Figure 7-70

Model name: B84143D0150R127

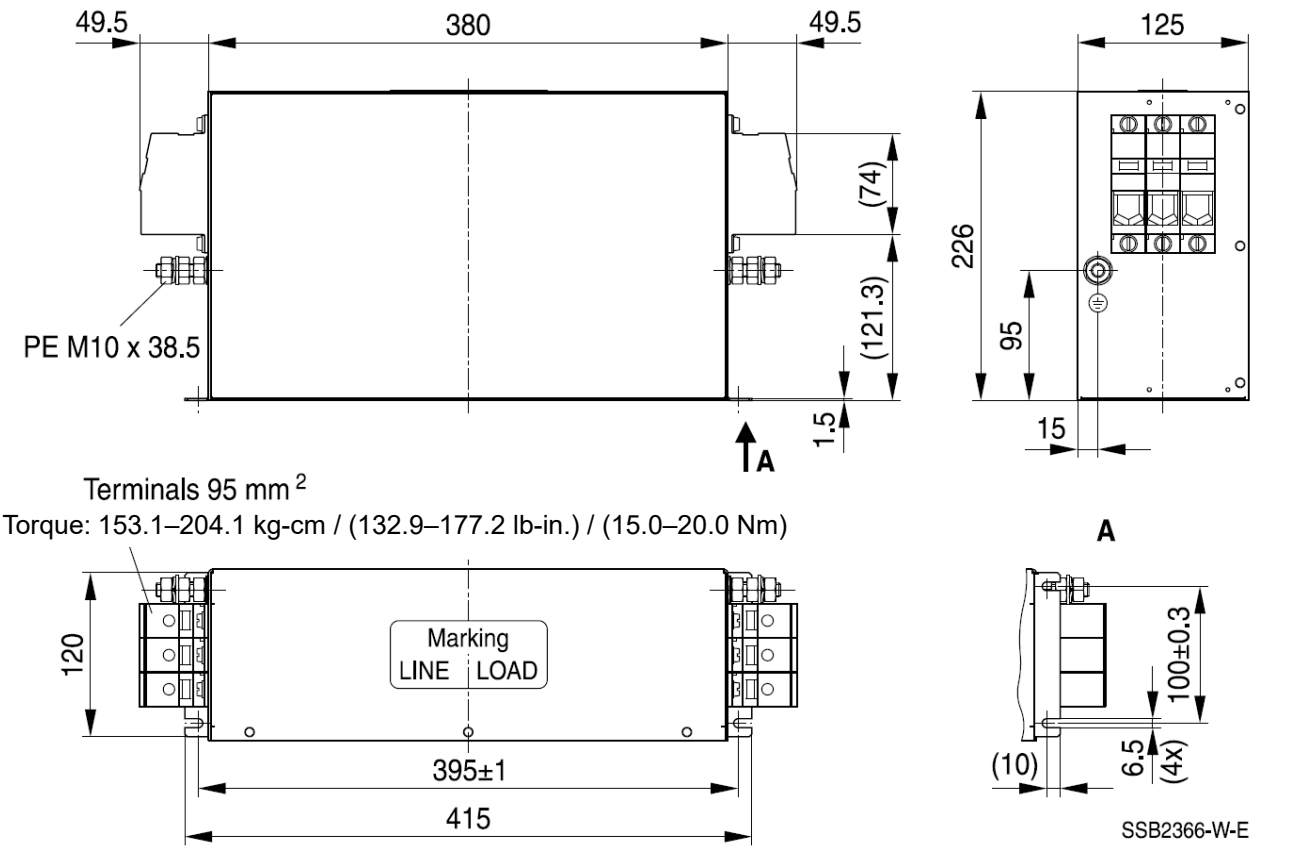

Figure 7-71

Model name: B84143D0200R127

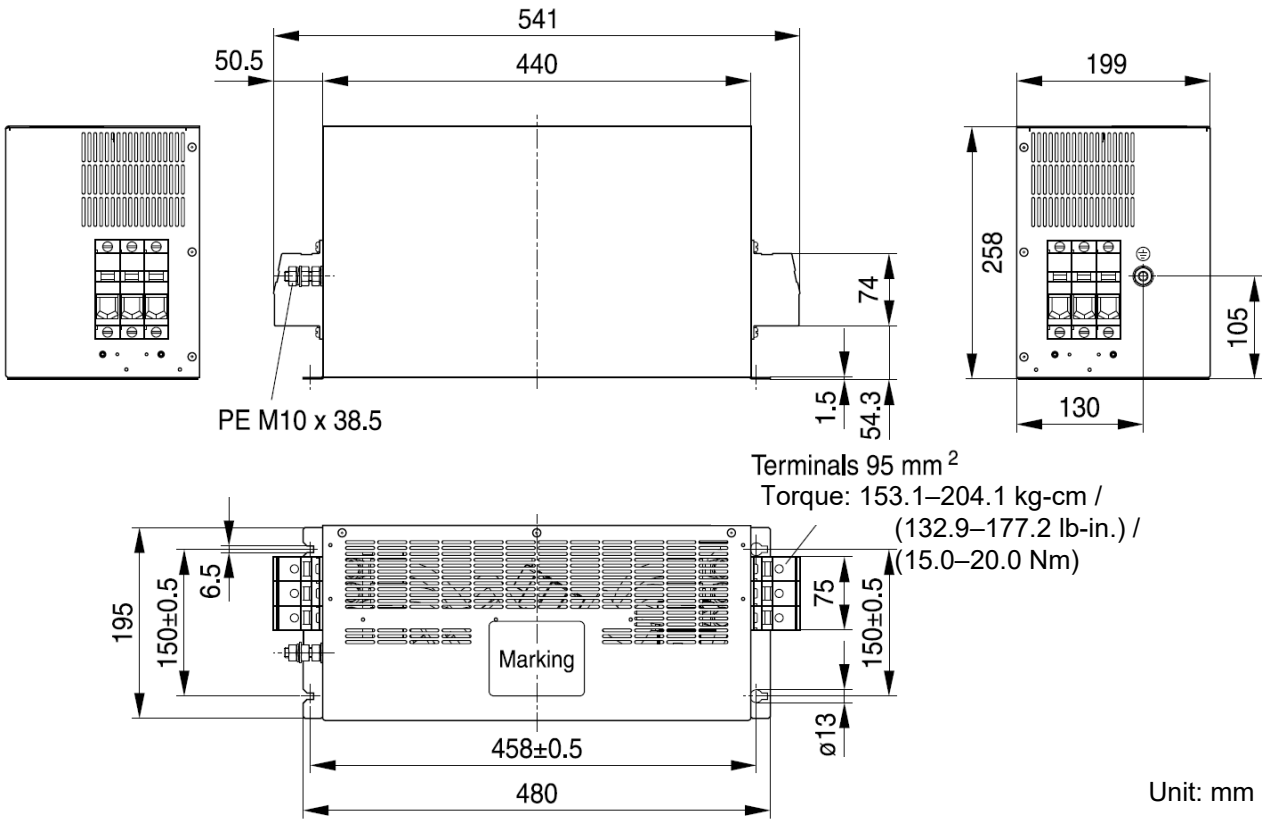

Figure 7-72

Model name: B84143B1600S021

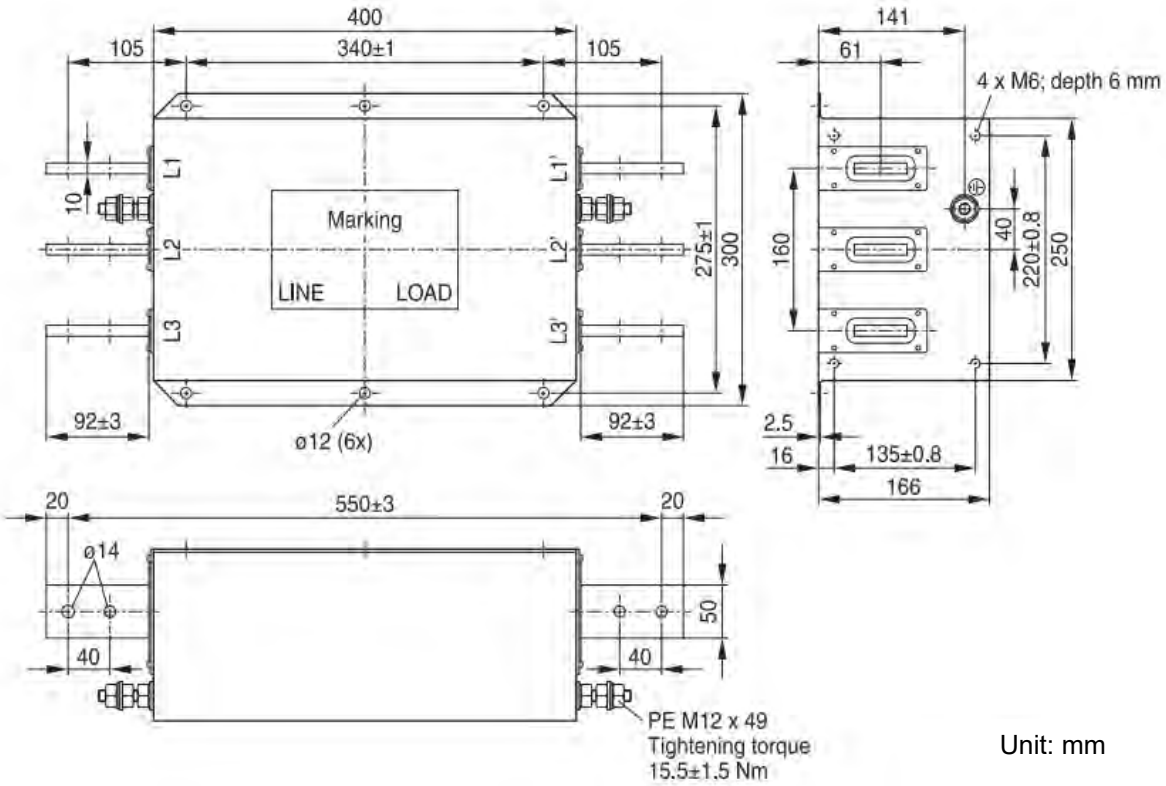

Figure 7-73

Model name: KMF370A

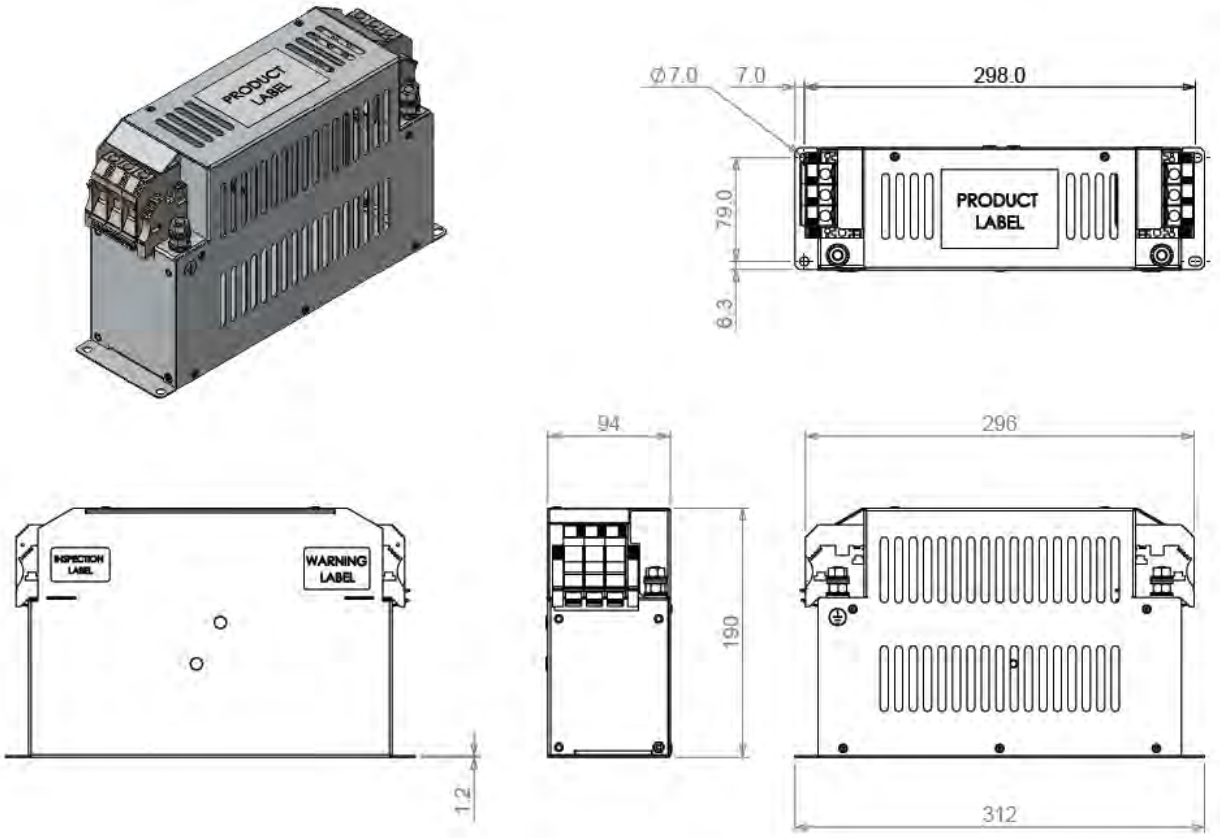

Figure 7-74

Unit: mm

Model name: KMF3100A

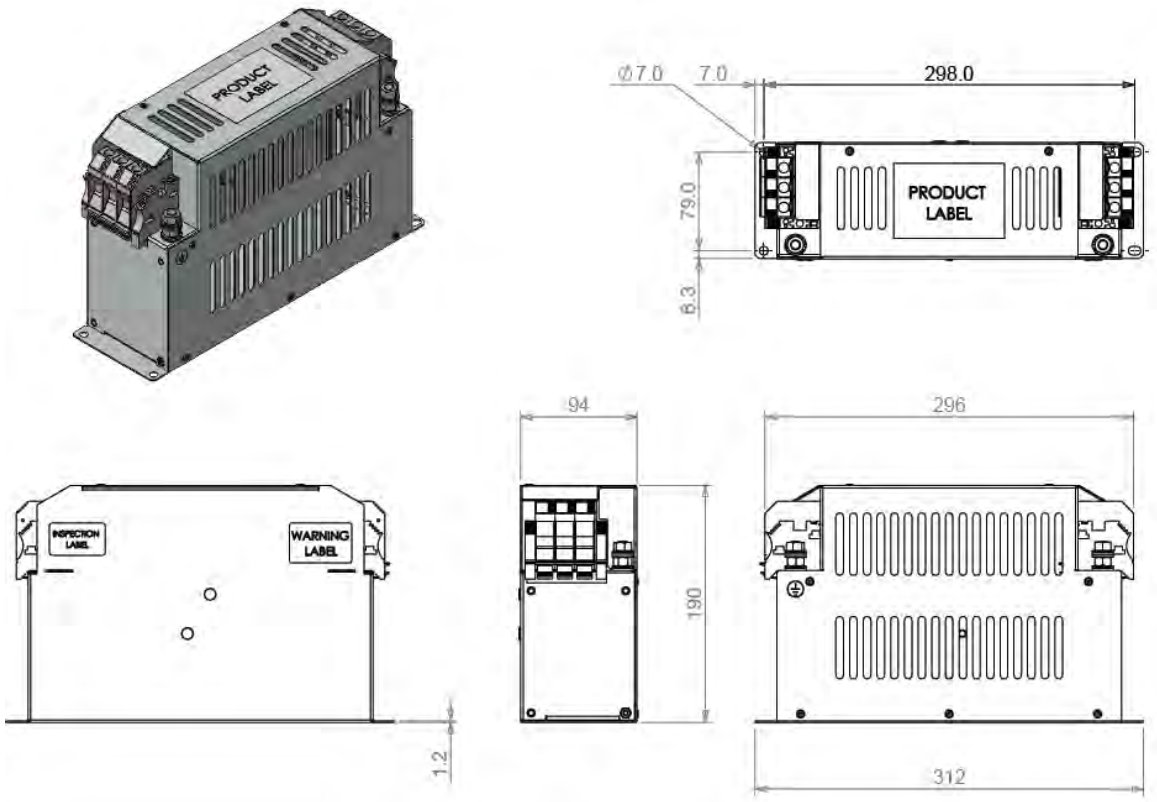

Unit: mm

Figure 7-75

The table below is the maximum shielded cable length for drive models with built-in EMC filters. You can choose the corresponding shielded cable length according to the required noise emission and electromagnetic interference class.

EMC built-in Model		Rated Current (HD)	Comply with EMC (IEC 61800-3) Class C3		Comply with EMC (IEC 61800-3) Class C2	
Frame	Model		Shielded Cable Length	Fc	Shielded Cable Length	Fc
A	VFD007CH4EA-21	4.3	30 m	≤ 8 kHz	10 m	≤ 8 kHz
	VFD015CH4EA-21	5.9				
	VFD022CH4EA-21	8.7				
	VFD037CH4EA-21	14				
	VFD040CH4EA-21	15.5				
	VFD055CH4EA-21	17				
B	VFD075CH4EA-21	20				
	VFD110CH4EA-21	26				
	VFD150CH4EA-21	35				
C	VFD185CH4EA-21	40		≤ 6 kHz		≤ 6 kHz
	VFD220CH4EA-21	47				
	VFD300CH4EA-21	63				

NOTE: Shielded cable length of Frame A should be no longer than 30 m and Frame B, C no longer than 50 m to prevent cable length from being too long, which may cause built-in EMC filter malfunction due to overheat resulting from leakage current and larger wires parasitic capacitance.

Table 7-61

EMC Filter Installation

All electrical equipment, including AC motor drives, generate high frequency / low frequency noise and interfere with peripheral equipment by radiation or conduction when in operation. You can eliminate most of the interference by install an EMC filter correctly. It is recommended to use DELTA EMC filter to have the best interference elimination performance.

We assure that it can comply with following rules when AC motor drive and EMC filter are installed and wired according to user manual:

1. EN61000-6-4
2. EN61800-3: 1996
3. EN55011 (1991) Class A Group 1

General Precaution

To ensure EMC filter can maximize the effect of suppressing the interference of AC motor drive, the installation and wiring of AC motor drive should follow the user manual. In addition, be sure to observe the following precautions:

1. Install the EMC filter and AC motor drive on the same metal plate.
2. Install the AC motor drive on footprint EMC filter or install the EMC filter as close as possible to the AC motor drive.
3. Wire as short as possible.
4. Ground the metal plate.
5. The cover of EMC filter and AC motor drive or grounding should be fixed on the metal plate and the contact area should be as large as possible.

Choose suitable motor cable and precautions

Improper installation and choice of motor cable affect the performance of EMC filter. Be sure to follow the precautions below when selecting motor cable.

1. Use the cable with shielding (double shielding is the best).
2. The shielding on both ends of the motor cable should be grounded with the minimum length and maximum contact area.
3. Remove any paint on metal saddle for good ground contact with the plate and shielding.

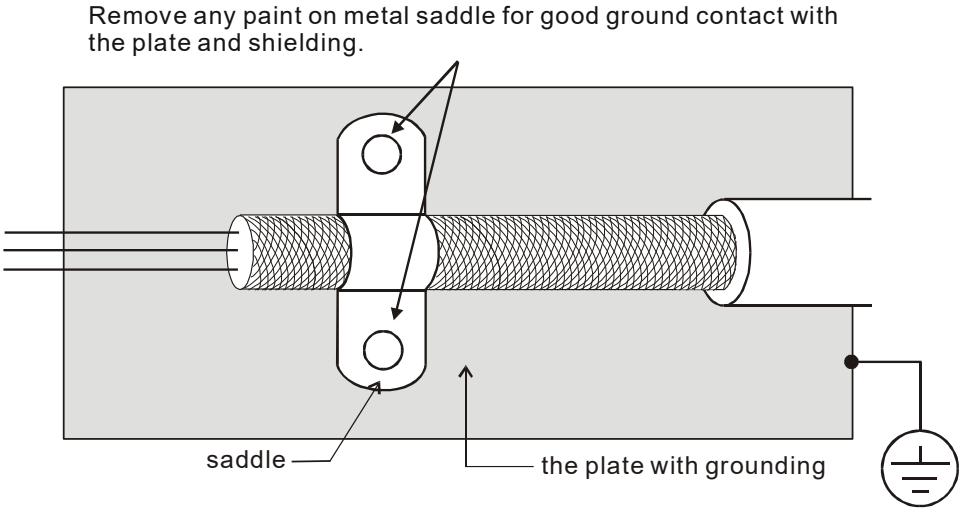

Figure 7-76

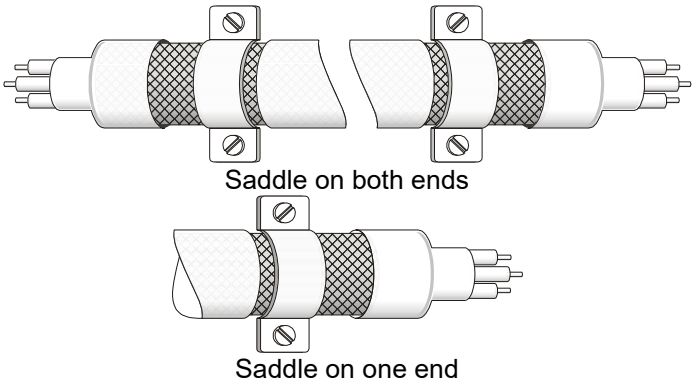

Figure 7-77

Capacitor Filter

Capacitor Filter is a simple filter accessory, installed to provide simple filtering and eliminating interference.

Installation

Installed on the input side, connect each cable on terminal R, S, T and PE. As shown in the figure below. (Do NOT install the capacitor filter on the output side.)

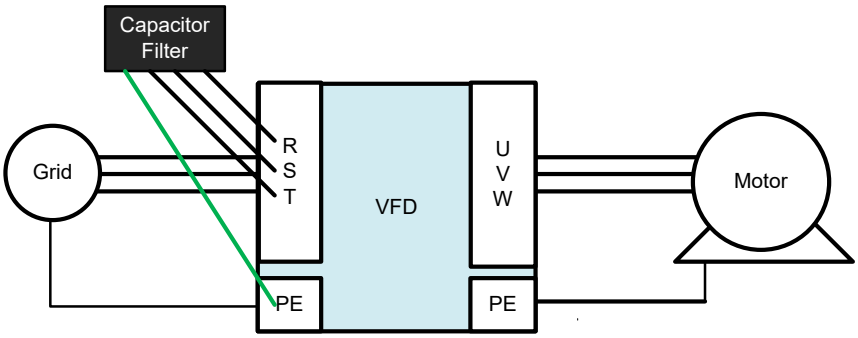

Figure 7-78

Model / Specification

Model	Capacitance of the Capacitor	Temperature
CXY101-43A	Cx：1uF±20% Cy：1uF±20%	-40~+85°C

Table 7-62

Unit: mm (inch)

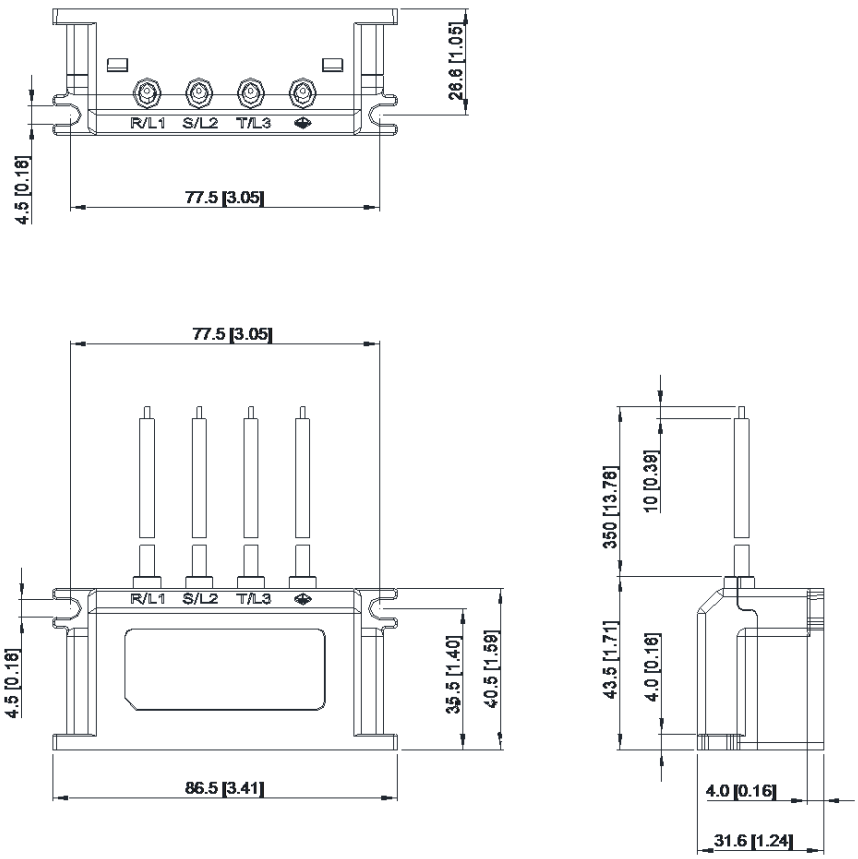

Figure 7-79

7-7 Panel Mounting (MKC-KPPK)

For MKC-KPPK model, user can choose wall mounting or embedded mounting, protection level is IP66.

Applicable to the digital keypads (KPC-CC01).

Wall Mounting

Accessory*1

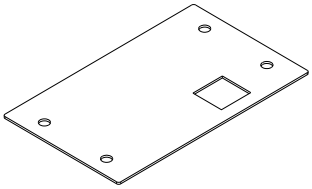

Figure 7-80

Screw *4–M4*p 0.7 *L8 mm

Torque: 10–12 kg-cm / (8.7–10.4lb-in.) / (1.0–1.2 Nm)

Panel cutout dimension Unit: mm (inch)

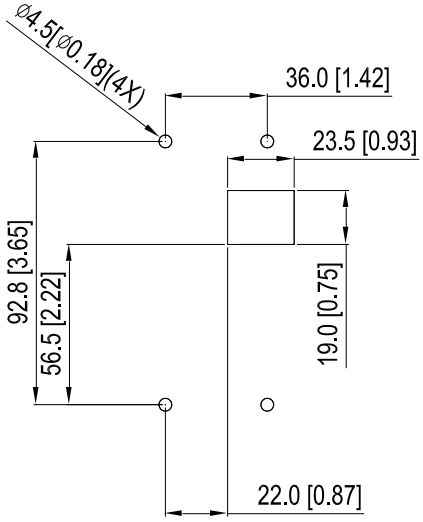

Figure 7-82

Embedded Mounting

Accessory*2

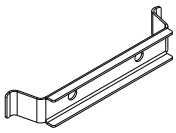

Figure 7-81

Screw *4–M4*p 0.7 *L8 mm

Torque: 10–12 kg-cm / (8.7–10.4lb-in.) / (1.0–1.2 Nm)

Panel cutout dimension Unit: mm (inch)

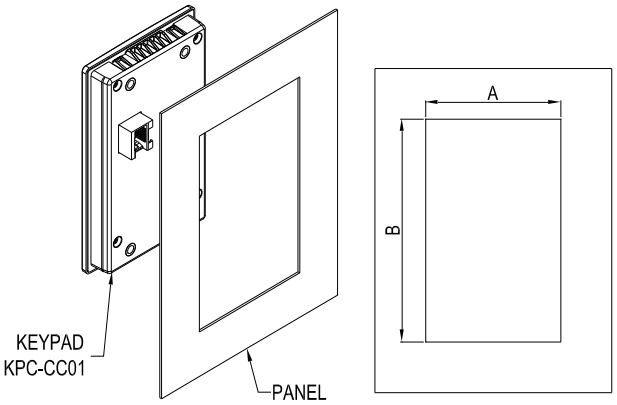

Figure 7-83

Normal cutout dimension

Panel Thickness	1.2 mm	1.6 mm	2.0 mm
A	66.4 (2.614)		
B	110.2 (4.339)	111.3 (4.382)	112.5 (4.429)

*Deviation: ±0.15 mm /±0.0059 inch

Table 7-63

Cutout dimension (Waterproof level: IP56)

Panel Thickness	1.2 mm	1.6 mm	2.0 mm
A	66.4 (2.614)		
B	110.8 (4.362)		

*Deviation: ±0.15 mm /±0.0059 inch

Table 7-64

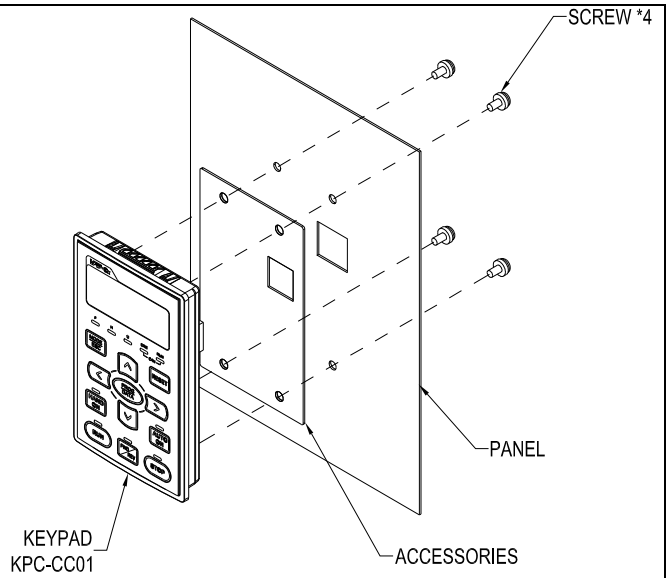

Figure 7-84

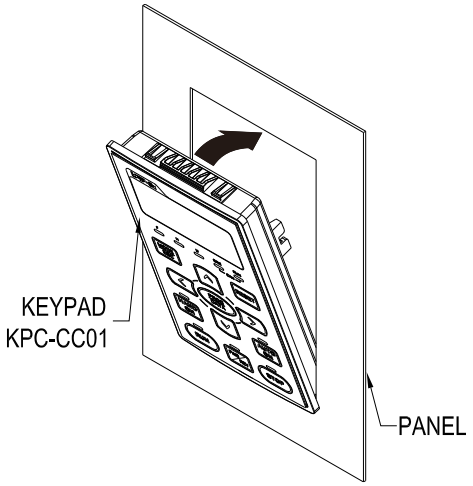

Figure 7-85

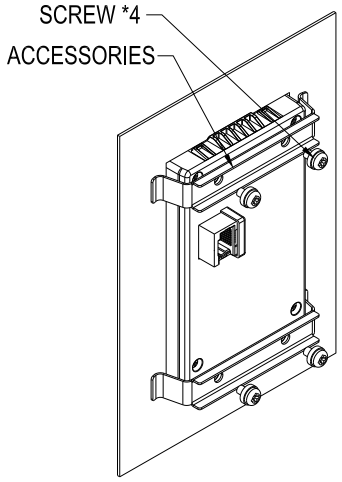

Figure 7-86

7-8 Conduit Box Kit

- Appearance

  Conduit box kit is optional for VFDXXXCHXXA-00 (Frame D and above) and VFD370CH43S-00, the protection is IP20 / NEMA1 / UL TYPE1 after installation.

Frame D0-1 / D0-2

Applicable models

VFD370CH43S-00, VFD370CH43S-21

Model “MKC-D0N1CB”

ITEM	Description	Qty.
1	Screw M5*0.8*10L	4
2	Bushing Rubber 28	2
3	Bushing Rubber 44	2
4	Bushing Rubber 73	2
5	Conduit box cover	1
6	Conduit box base	1

Table 7-65

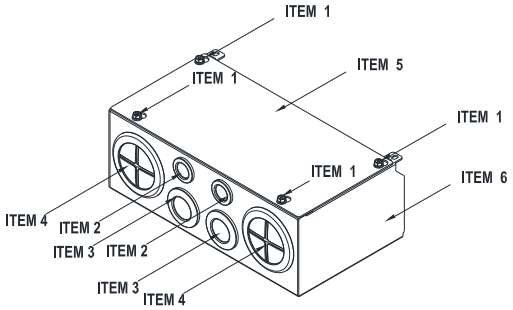

Figure 7-87

Frame D

Applicable models

D1: VFD220CH23A-00, VFD300CH23A-00, VFD370CH23A-00, VFD450CH43A-00, VFD550CH43A-00, VFD750CH43A-00

D2: VFD220CH23A-21, VFD300CH23A-21, VFD370CH23A-21, VFD450CH43A-21, VFD550CH43A-21, VFD750CH43A-21

D3: VFD450CH43L-00, VFD550CH43L-00, VFD750CH43L-00

Model “MKC-DN1CB”

ITEM	Description	Qty.
1	Screw M5*0.8*10L	4
2	Bushing Rubber 28	2
3	Bushing Rubber 44	2
4	Bushing Rubber 88	2
5	Conduit box cover	1
6	Conduit box base	1

Table 7-66

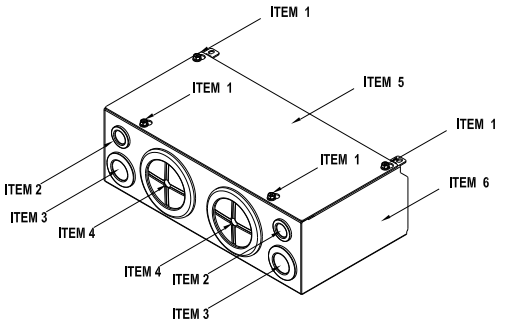

Figure 7-88

Frame E

Applicable models

E1: VFD450CH23A-00, VFD550CH23A-00, VFD900CH43A-00, VFD1100CH43A-00

E2: VFD450CH23A-21, VFD550CH23A-21, VFD900CH43A-21, VFD1100CH43A-21

Model “MKC-EN1CB”

ITEM	Description	Qty.
1	Screw M5*0.8*10L	6
2	Bushing Rubber 28	2
3	Bushing Rubber 44	4
4	Bushing Rubber 100	2
5	Conduit box cover	1
6	Conduit box base	1

Table 7-67

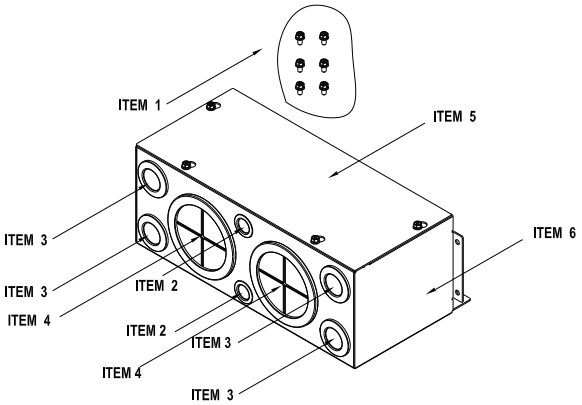

Figure 7-89

Frame F

Applicable models

F1: VFD750CH23A-00, VFD1320CH43A-00

F2: VFD750CH23A-21, VFD1320CH43A-21

Model “MKC-FN1CB”

ITEM	Description	Qty.
1	Screw M5*0.8*10L	8
2	Bushing Rubber 28	2
3	Bushing Rubber 44	4
4	Bushing Rubber 100	2
5	Conduit box cover	1
6	Conduit box base	1

Table 7-68

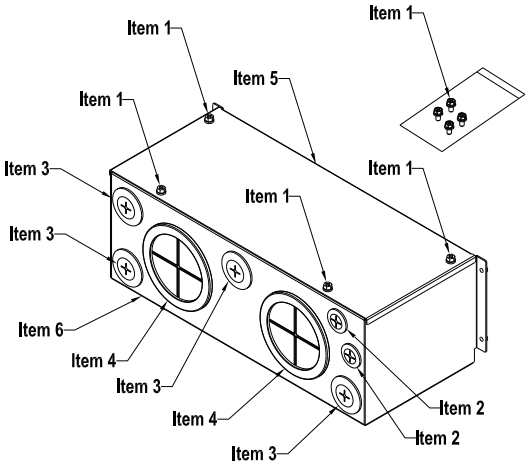

Figure 7-90

Frame G

Applicable models

G1: VFD1600CH43A-00, VFD1850CH43A-00, VFD2200CH43A-00

G2: VFD1600CH43A-21, VFD1850CH43A-21, VFD2200CH43A-21

Model “MKC-GN1CB”

ITEM	Description	Qty.
1	Screw M5*0.8*10L	10
1	Screw M8*1.25*20L	4
2	Bushing Rubber 28	2
3	Bushing Rubber 44	2
4	Bushing Rubber 130	3
5	Conduit box cover	1
6	Conduit box base	1

Table 7-69

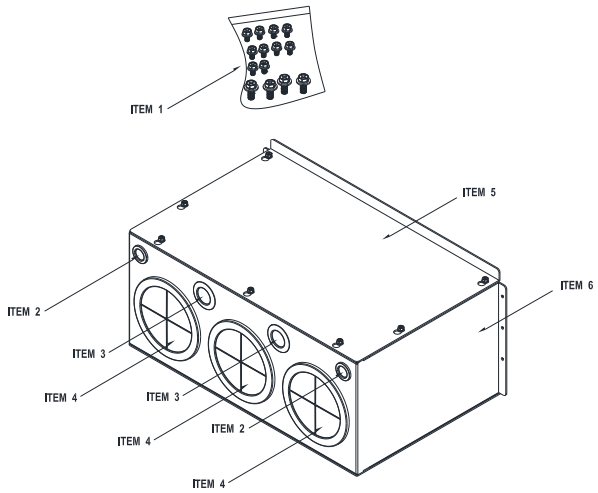

Figure 7-91

Frame H

Applicable models

H1: VFD2800CH43A-00, VFD3150CH43A-00, VFD3550CH43A-00, VFD4500CH43A-00

H3: VFD2800CH43C-21, VFD3150CH43C-21, VFD3550CH43C-21, VFD4500CH43C-21

Model “MKC-HN1CB”

ITEM	Description	Qty.
1	Screw M6*1.0*25L	8
2	Screw M8*1.25*30L	3
3	NUT M8	4
4	NUT M10	4
5	Bushing Rubber 28	4
6	Bushing Rubber 44	2
7	Bushing Rubber 102	4
8	Bushing Rubber 130	4
9	Conduit box cover 1	1
10	Conduit box cover 2	2
11	Conduit box cover 3	2
12	Conduit box cover 4	2
13	Conduit box base	1
14	Accessories 1	2
15	Accessories 2	1

Table 7-70

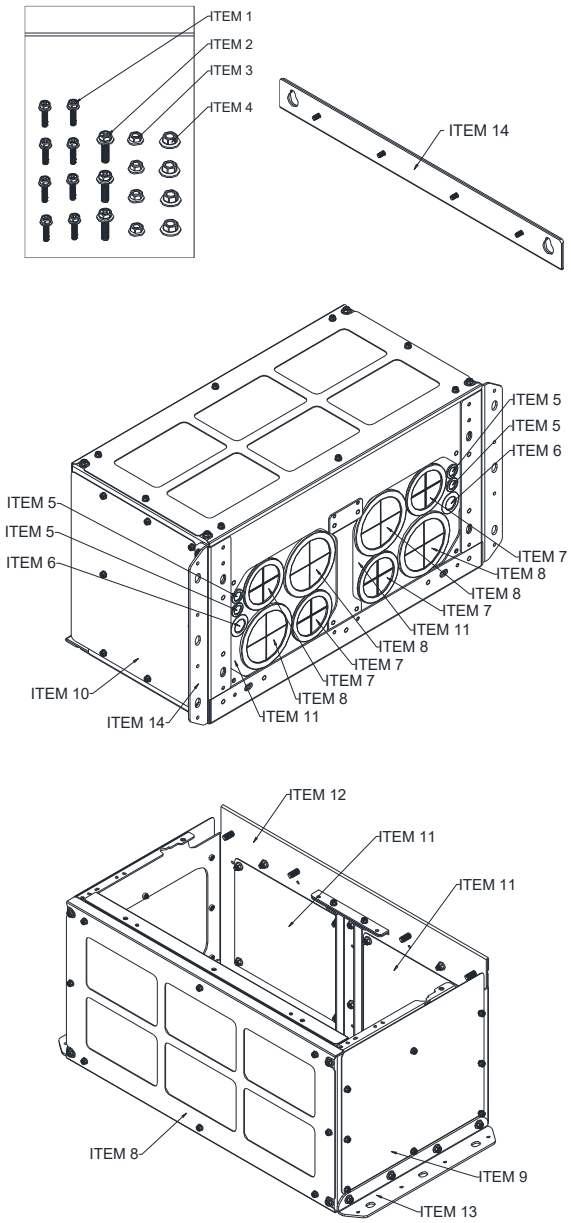

Figure 7-92

- Conduit Box Installation

Frame D0-1 / D0-2

1. Loosen the cover screws and press the tabs on each side of the cover to remove the cover, as shown in the following figure.

   Screw torque: 12–15 kg-cm / (10.4–13 Ib-in) / (1.2–1.5 Nm)

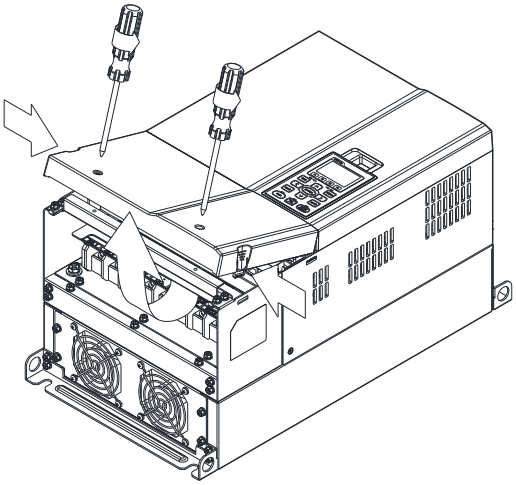

Figure 7-93

2. Remove the 5 screws shown in the following figure.

   Screw torque: 24–26 kg-cm / (20.8–22.6 Ib-in) / (2.4–2.5 Nm)

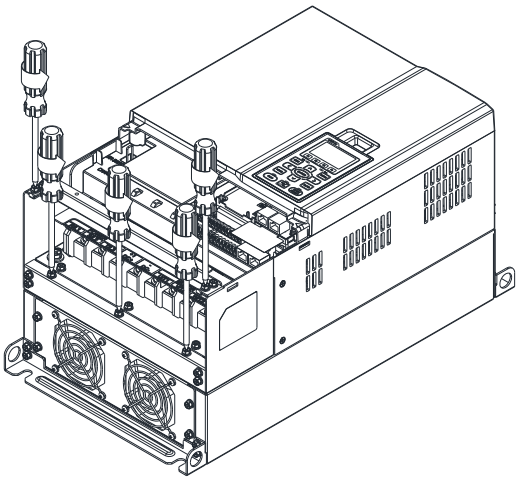

Figure 7-94

3. Install the conduit box by fasten the 5 screws shown in the following figure.

   Screw torque: 24–26 kg-cm / (20.8–22.6 Ib-in) / (2.4–2.5 Nm)

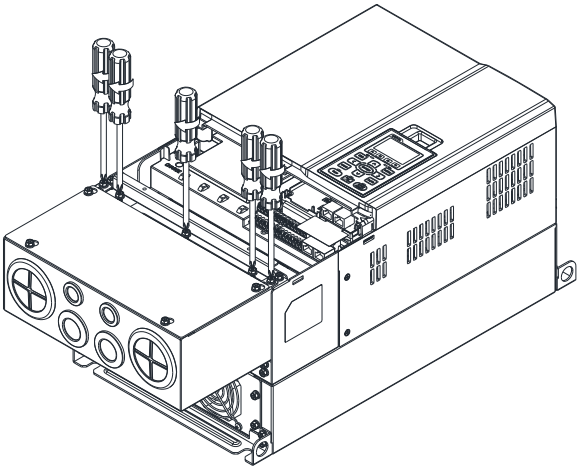

Figure 7-95

4. Fasten the 2 screws shown in the following figure.

   Screw torque: 12–15 kg-cm / (10.4–13 Ib-in) / (1.2–1.5 Nm)

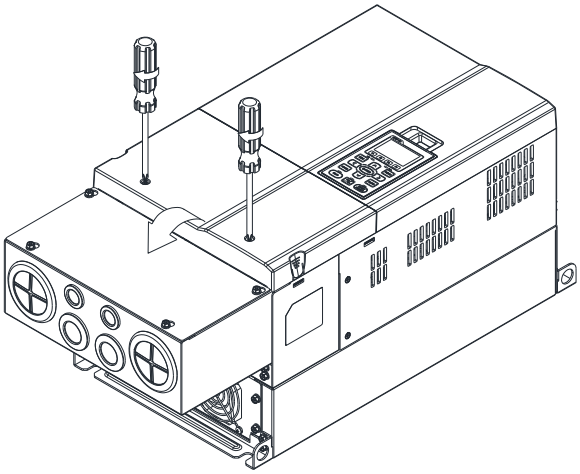

Figure 7-96

Frame D

1. Loosen the cover screws and press the tabs on each side of the cover to remove the cover, as shown in the following figure.

   Screw torque: 12–15 kg-cm / (10.4–13 Ib-in) / (1.2–1.5 Nm)

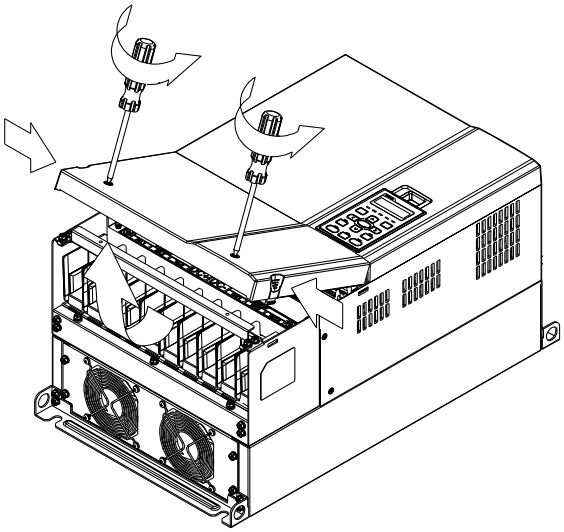

Figure 7-97

2. Remove the 5 screws shown in the following figure.

   Screw torque: 24–26 kg-cm / (20.8–22.6 Ib-in) / (2.4–2.5 Nm)

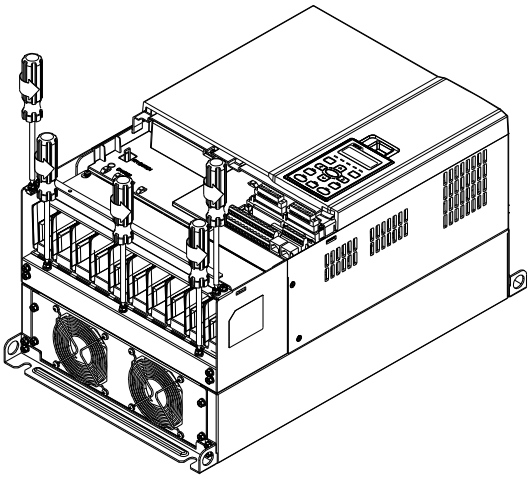

Figure 7-98

3. Install the conduit box by fasten the 5 screws shown in the following figure.

   Screw torque: 24–26 kg-cm / (20.8–22.6 lb-in) / (2.4–2.5 Nm)

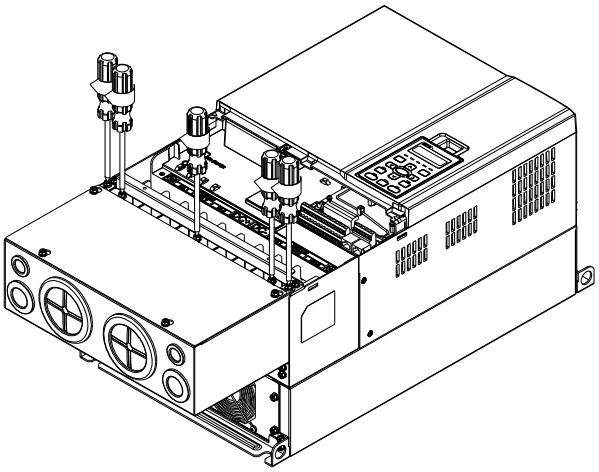

Figure 7-99

4. Fasten the 2 screws shown in the following figure.

   Screw torque: 12–15 kg-cm / (10.4–13 lb-in) / (1.2–1.5 Nm)

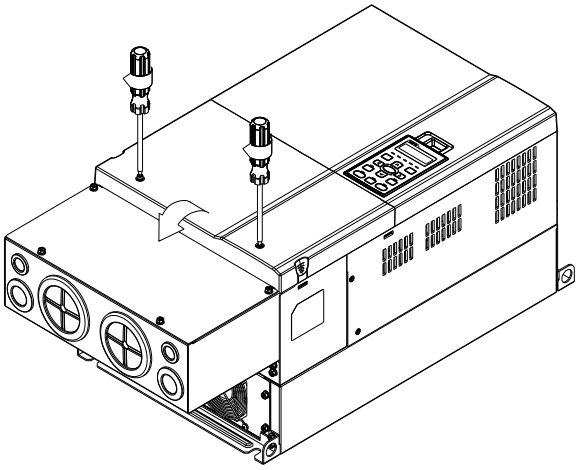

Figure 7-100

Frame E

1. Loosen the 4 cover screws and lift the cover.

   Screw torque: 12–15 kg-cm / (10.4–13 lb-in) / (1.2–1.5 Nm)

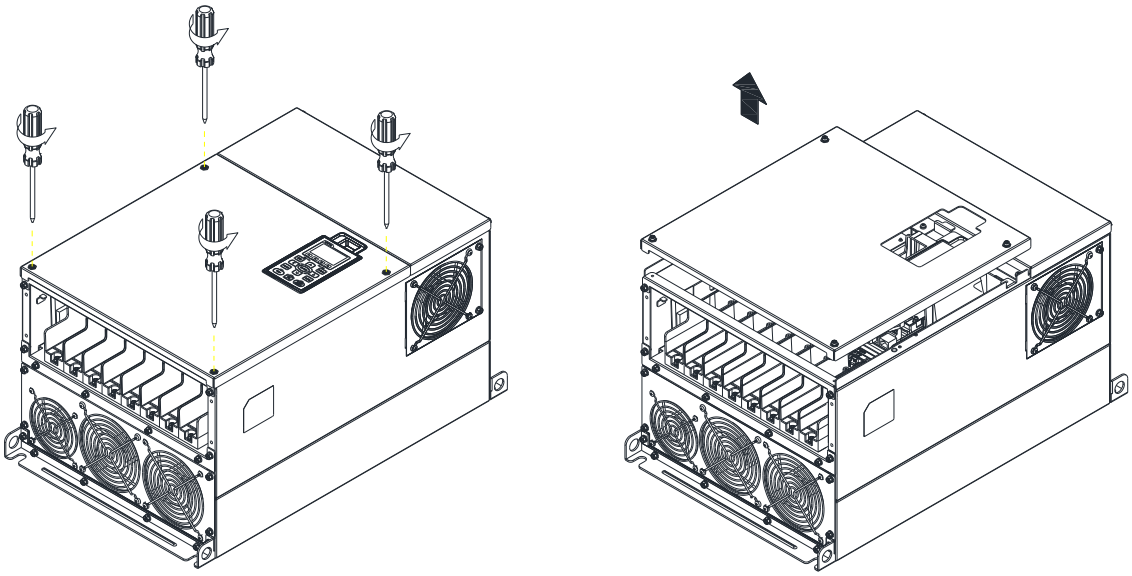

Figure 7-101

2. Fasten the 6 screws shown in the following figure and place the cover back to the original position.

   Screw torque: 24–26 kg-cm / (20.8–22.6 lb-in) / (2.4–2.5 Nm)

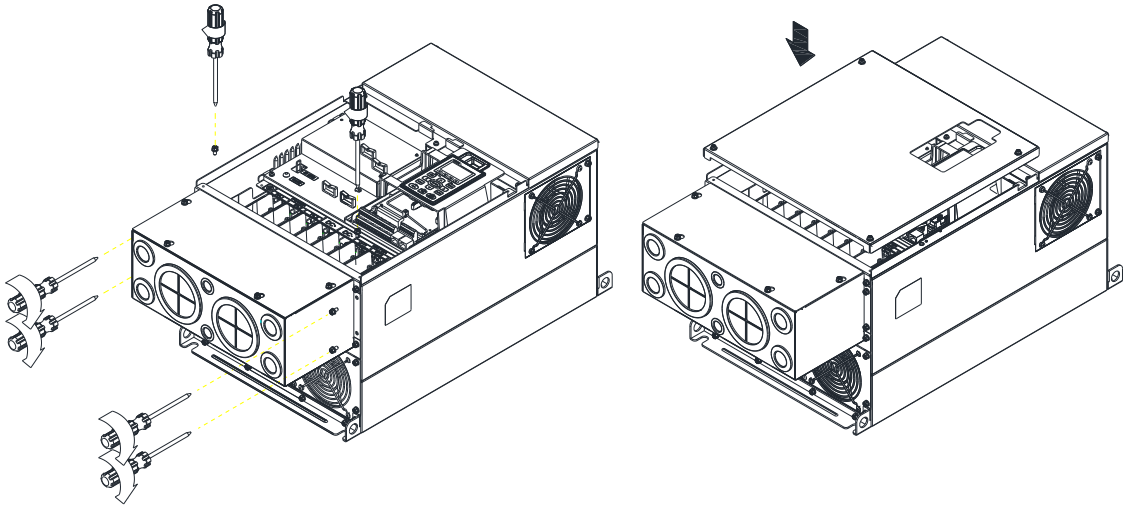

Figure 7-102

3. Fasten the 4 screws shown in the following figure.

   Screw torque: 12–15 kg-cm / (10.4–13 lb-in) / (1.2–1.5 Nm)

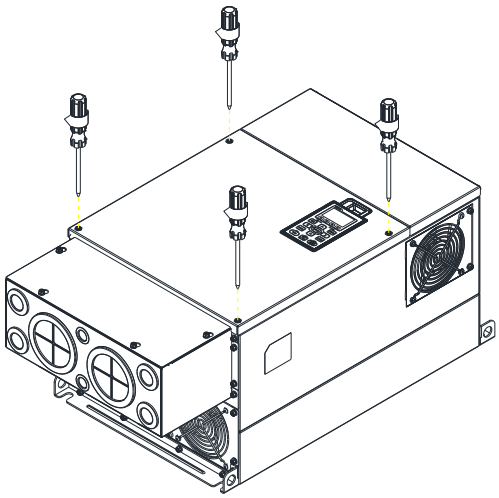

Figure 7-103

Frame F

1. Loosen the cover screws and press the tabs on each side of the cover to remove the cover, as shown in the following figure.

   Screw torque: 12–15 kg-cm / (10.4–13 lb-in) / (1.2–1.5 Nm)

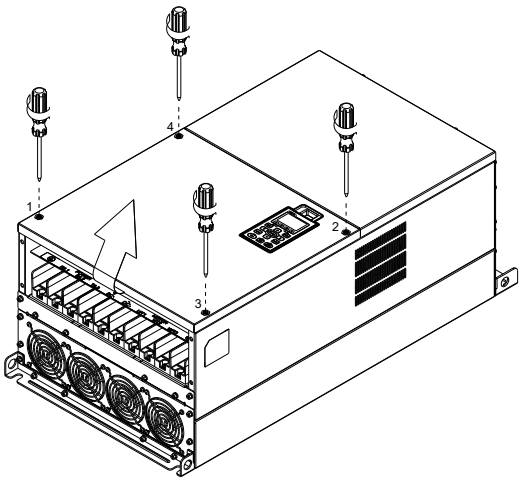

Figure 7-104

2. Install the conduit box by fastens the 4 screws, as shown in the following figure.

   Screw torque: 24–26 kg-cm / (20.8–22.6 lb-in) / (2.4–2.5 Nm)

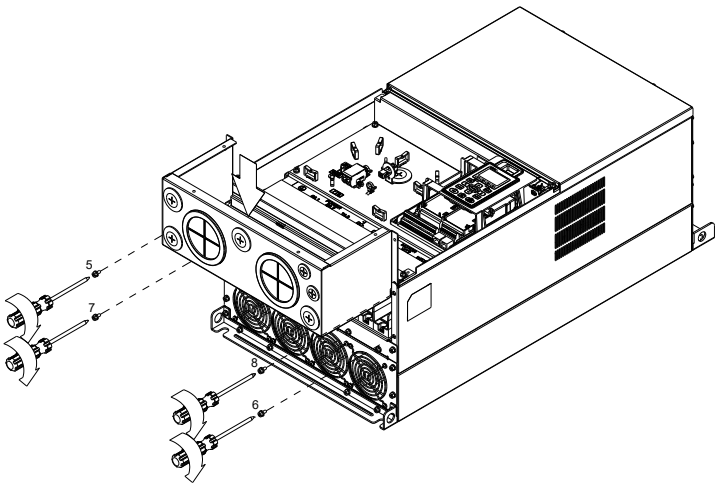

Figure 7-105

3. Install the conduit box by fasten all the screws shown in the following figure

   Screw 9–12 torque: 12–15 kg-cm / (10.4–13.6 lb-in) / (1.2–1.5 Nm)

   Screw 13–16 torque: 24–26 kg-cm / (20.8–22.6 lb-in) / (2.4–2.5 Nm)

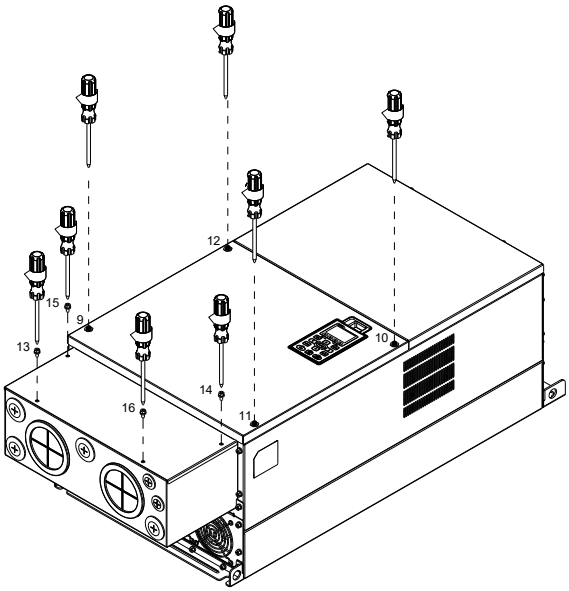

Figure 7-106

Frame G

1. On the conduit box, loosen 7 of the cover screws and remove the cover.

   Screw torque: 24–26 kg-cm / (20.8–22.6 Ib-in) / (2.4–2.5 Nm)

2. On the drive, loosen 4 of the cover screws and press the tabs on each side of the cover to remove the cover, as shown in the following figure.

   Screw torque: 12–15 kg-cm / (10.4–13 Ib-in) / (1.2–1.5 Nm)

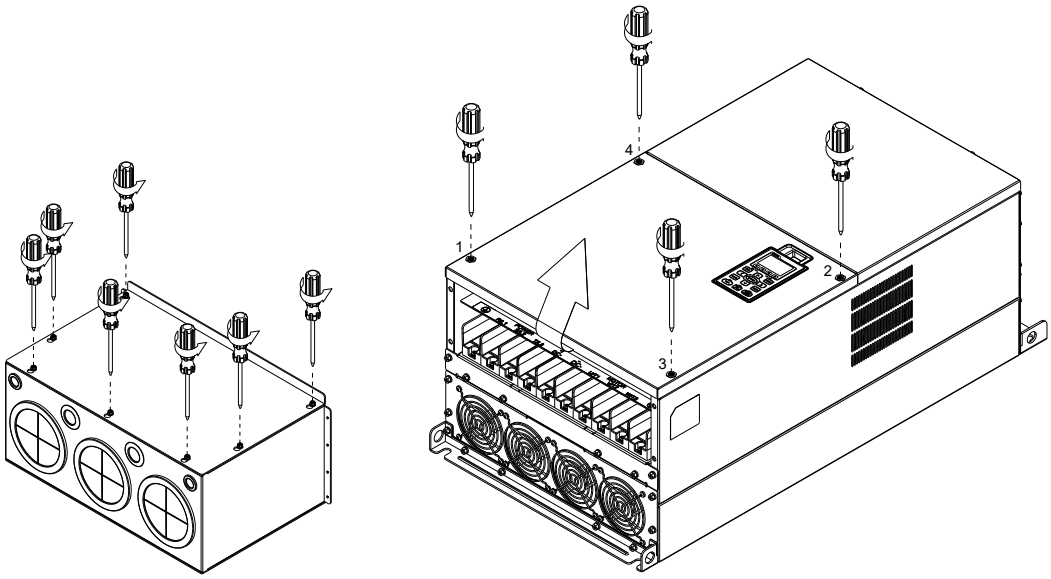

Figure 7-107

3. Remove the top cover and loosen the screws.

   M5 Screw torque: 24–26 kg-cm / (20.8–22.6 Ib-in) / (2.4–2.5 Nm)

   M8 Screw torque: 100–120 kg-cm / (86.7–104.1 Ib-in) / (9.8–11.8 Nm)

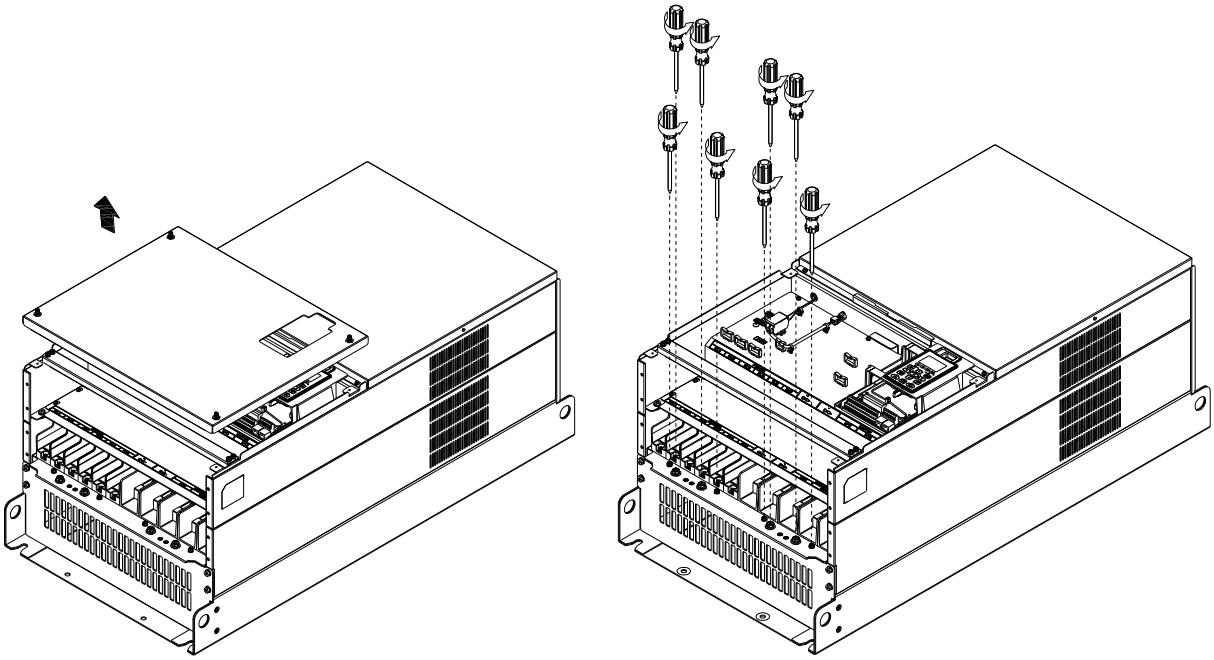

Figure 7-108

4. Install the conduit box by fastening all the screws shown in the following figure.

   M5 Screw torque: 24–26 kg-cm / (20.8–22.6 Ib-in) / (2.4–2.5 Nm)

   M8 Screw torque: 100–120 kg-cm / (86.7–104.1 Ib-in) / (9.8–11.8 Nm)

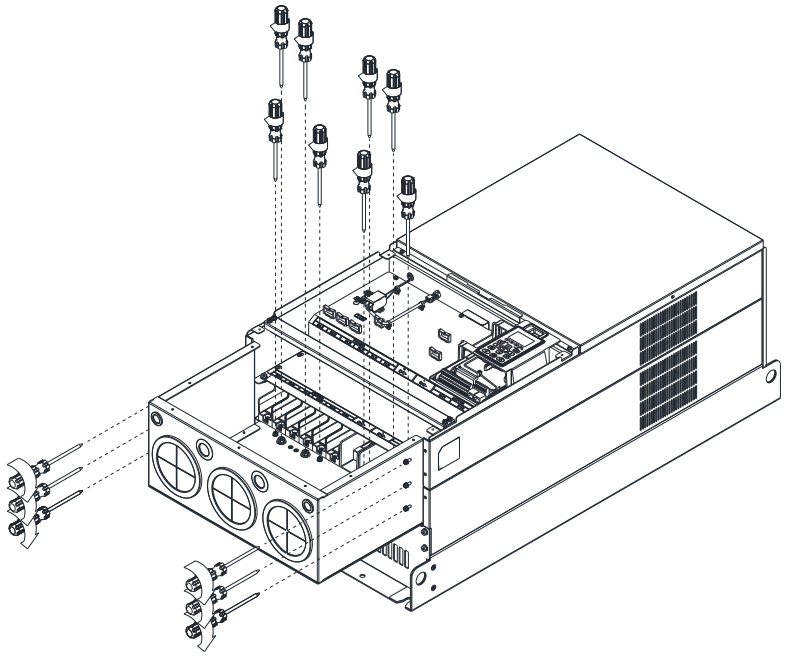

Figure 7-109

5. Fasten all the screws. Screw torque: 24–26 kg-cm / (20.8–22.6 Ib-in) / (2.4–2.5 Nm)

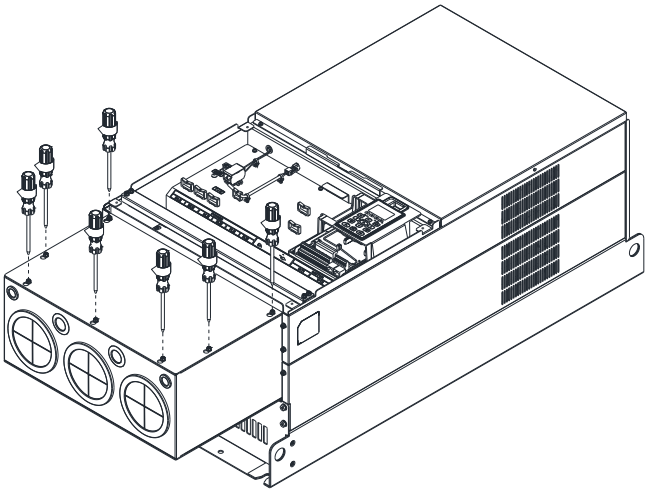

Figure 7-110

6. Place the cover back to the top and fasten the screws (as shown in the figure).
   Screw torque: 12–15 kg-cm / (10.4–13 lb-in) / (1.2–1.5 Nm)

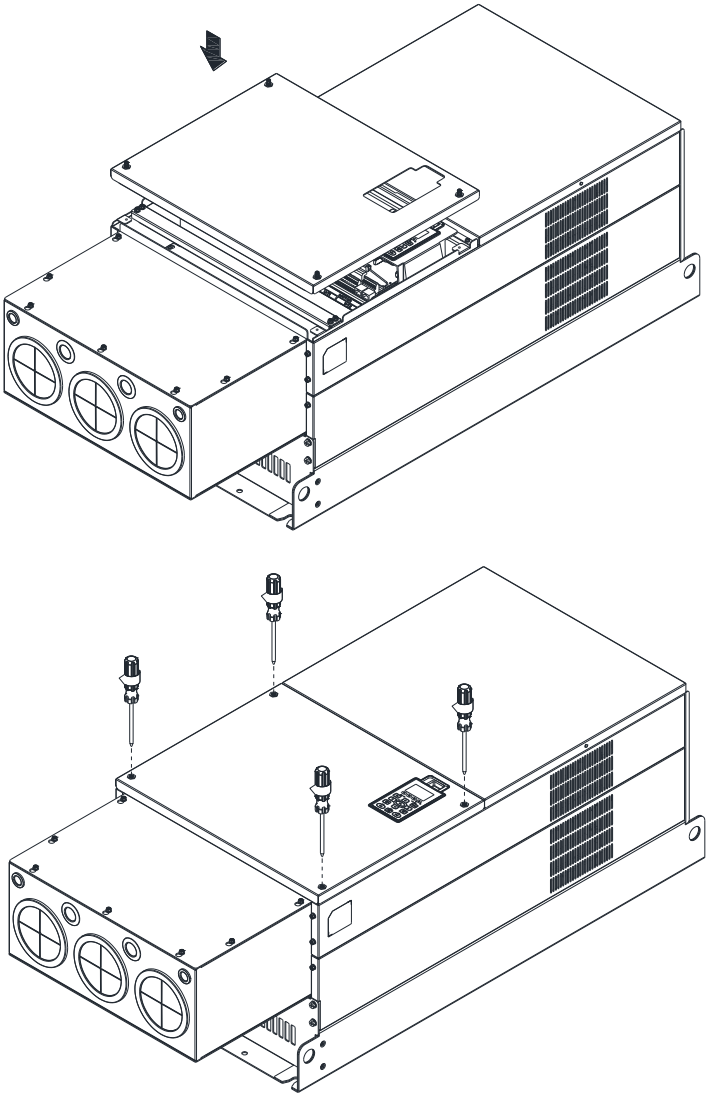

Figure 7-111

Frame H

Assembly for Frame H3 (Conduit Box)

1. Loosen the 3 screws and remove the cover of conduit box H3 as preparation.

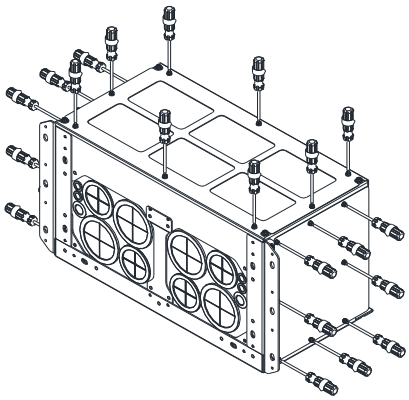

Figure 7-112

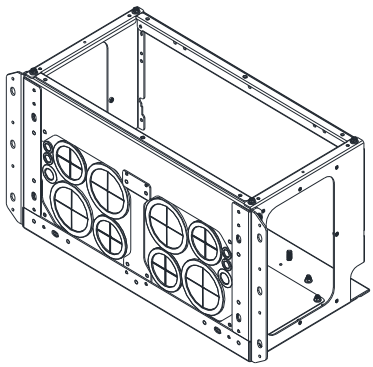

Figure 7-113

2. Loosen the screws as below figure shown.

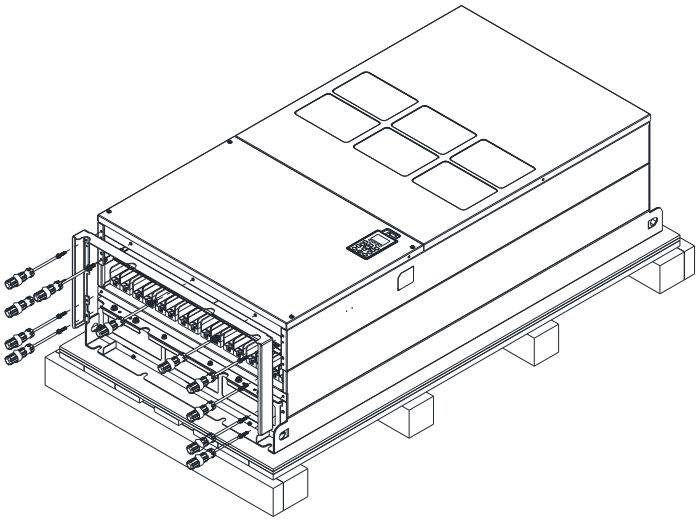

Figure 7-114

3. Fasten the M6 screws to locations shown in the following figure.

   Screw torques: 35–45 kg-cm / (30.3–39 lb-in.) / (3.4–4.4 Nm)

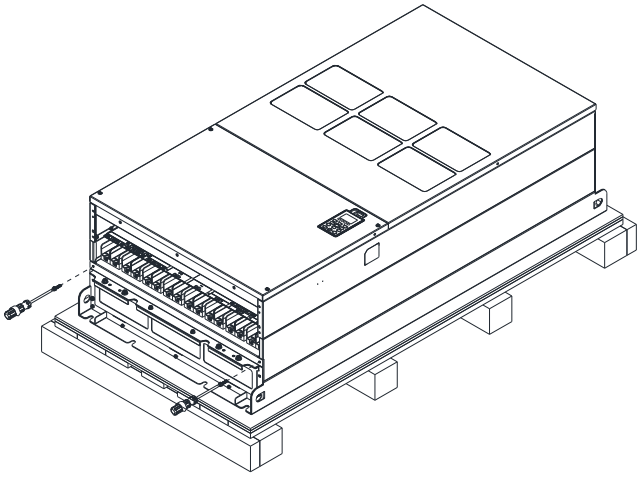

Figure 7-115

4. Install the conduit box by fasten all the screws shown in the following figure.

   Screw 1–6: M6 screw torque: 55–65 kg-cm / (47.7–56.4 lb-in) / (5.4–6.4 Nm)

   Screw 7–9: M8 screw torque: 100–110 kg-cm / (86.7–95.4 lb-in) / (9.8–10.8 Nm)

   Screw 10–13: M10 screw torque: 250–300 kg-cm / (216.9–260.3 lb-in) / (24.5–29.4 Nm)

   Screw 14–17: M8 screw torque: 100–110 kg-cm / (86.7–95.4 lb-in) / (9.8–10.8 Nm)

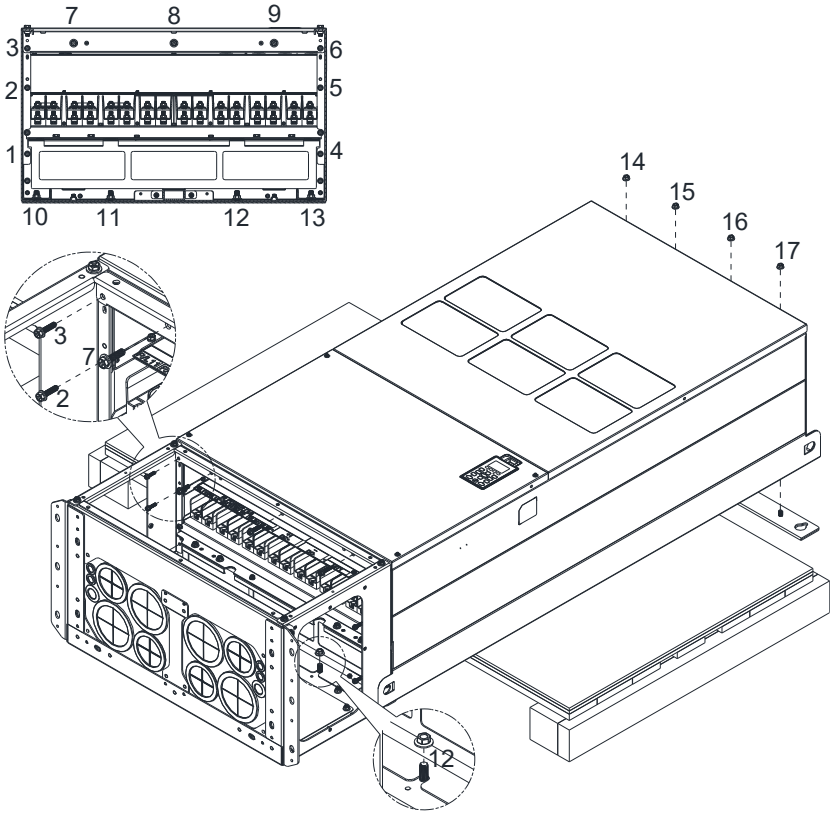

Figure 7-116

5. Fasten the 3 covers and screws, which were loosen from step 1, to the original location.

   Screw torque: 35–45 kg-cm / (30.3–39 lb-in.) / (3.4–4.4 Nm)

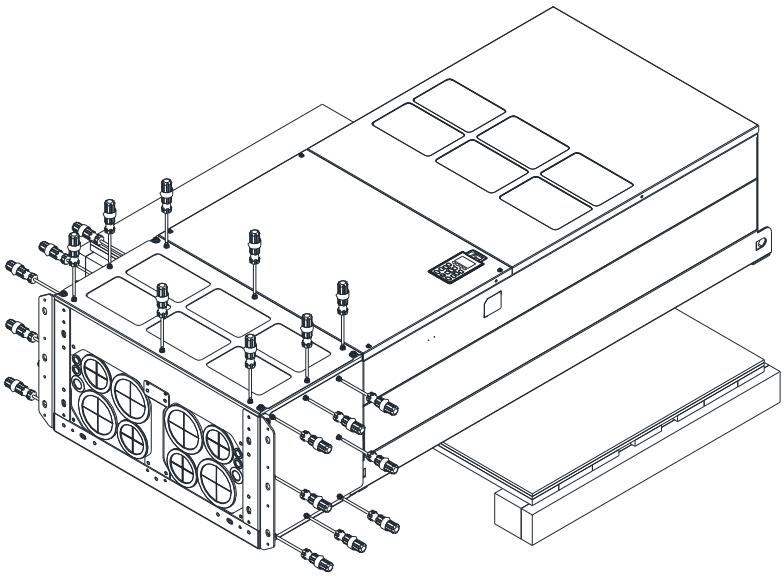

Figure 7-117

6. Installation complete.

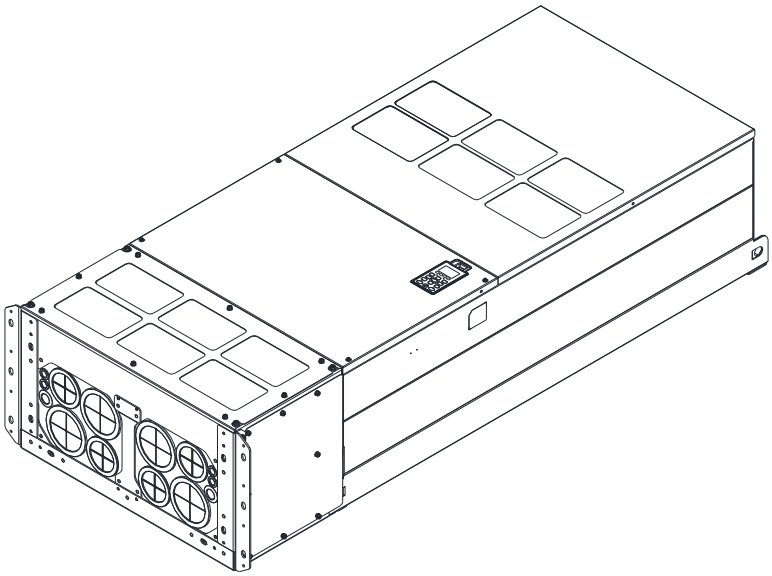

Figure 7-118

7-9 Fan Kit

- Appearance

  NOTE: The fan does not support hot swap function. For replacement, turn the power off before replacing the fan.

Frame A Applicable Model VFD015CH23A-21; VFD022CH23A-21; VFD037CH23A-21; VFD015CH43A-21; VFD022CH43A-21; VFD037CH43A-21; VFD055CH43A-21; VFD015CH4EA-21; VFD022CH4EA-21; VFD037CH4EA-21; VFD055CH4EA-21	Heat sink Fan Model “MKC-AFKM” 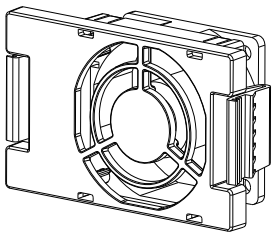 Figure 7-119
Frame B Applicable Model VFD055CH23A-21; VFD075CH43A-21; VFD075CH4EA-21	Heat sink Fan Model “MKC-BFKM1” 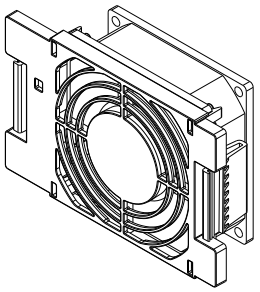 Figure 7-120
Frame B Applicable Model VFD075CH23A-21; VFD110CH23A-21; VFD110CH43A-21; VFD150CH43A-21; VFD110CH4EA-21; VFD150CH4EA-21	Heat sink Fan Model “MKC-BFKM2” 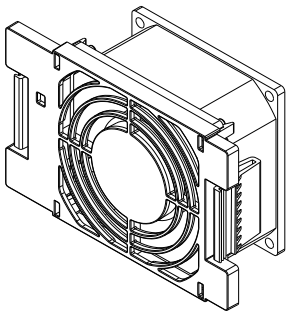 Figure 7-121
Frame B Applicable Model VFD055CH23A-21; VFD075CH23A-21; VFD110CH23A-21; VFD075CH43A-21; VFD110CH43A-21; VFD150CH43A-21; VFD075CH4EA-21; VFD110CH4EA-21; VFD150CH4EA-21	Capacitor Fan Model “MKC-BFKB” 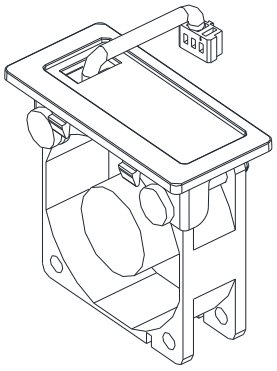 Figure 7-122

Frame C Applicable Model VFD150CH23A-21; VFD185CH23A-21	Capacitor Fan Model "MKC-CFKB1" 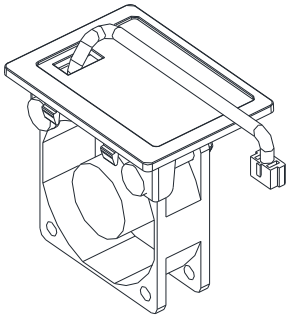 Figure 7-123
Frame C Applicable Model VFD185CH43A-21; VFD220CH43A-21; VFD300CH43A-21; VFD185CH4EA-21; VFD220CH4EA-21; VFD300CH4EA-21	Capacitor Fan Model "MKC-CFKB2" 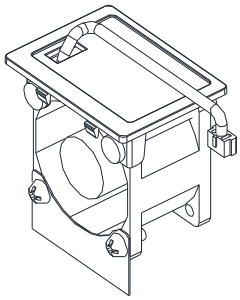 Figure 7-124
Frame C ● Following Model use one set of MKC-CFKM: VFD185CH43A-21; VFD220CH43A-21; VFD300CH43A-21; VFD185CH4EA-21; VFD220CH4EA-21 ● Following Model use two sets of MKC-CFKM: VFD150CH23A-21, VFD185CH23A-21, VFD300CH4EA-21	Heat sink Fan "MKC-CFKM" 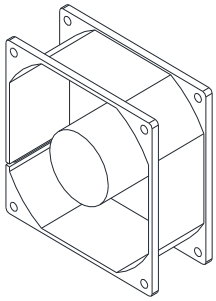 Figure 7-125
Frame D0-1 / D0-2 Applicable Model VFD370CH43S-00; VFD370CH43S-21	Heat sink Fan Model "MKC-D0FKM" 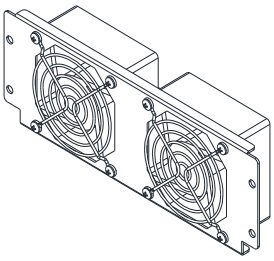 Figure 7-126 Capacitor Fan Model "MKC-DFKB" 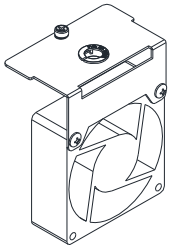 Figure 7-127
Frame D Applicable Model VFD220CH23A-00; VFD220CH23A-21; VFD300CH23A-00; VFD370CH23A-00; VFD300CH23A-21; VFD370CH23A-21; VFD450CH43A-00; VFD450CH43A-21; VFD550CH43A-00; VFD750CH43A-00; VFD550CH43A-21; VFD750CH43A-21; VFD450CH43L-00; VFD550CH43L-00; VFD750CH43L-00	Heat sink Fan Model "MKC-DFKM" 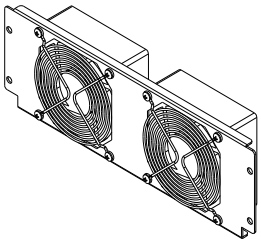 Figure 7-128 Capacitor Fan Model "MKC-DFKB" 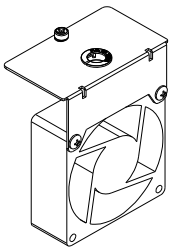 Figure 7-129

Frame E

Heat sink Fan Model "MKC-EFKM1"

Applicable Model

VFD450CH23A-00; VFD550CH23A-00; VFD450CH23A-21;
VFD550CH23A-21

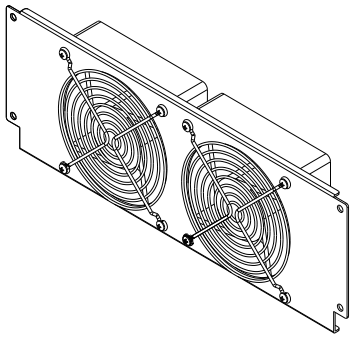

Figure 7-130

Frame E

Heat sink Fan Model "MKC-EFKM2"

Applicable Model

VFD900CH43A-00; VFD1100CH43A-00; VFD900CH43A-21;
VFD1100CH43A-21

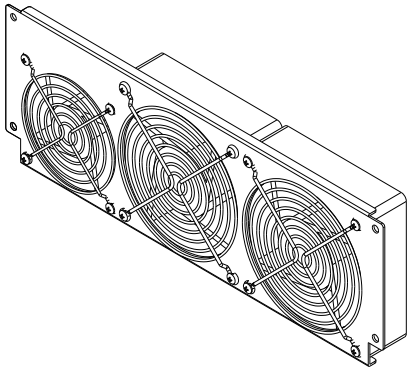

Figure 7-131

Frame E

Capacitor Fan Model "MKC-EFKB"

Applicable Model

VFD450CH23A-00; VFD550CH23A-00; VFD550CH23A-21;
VFD750CH23A-21; VFD900CH43A-00; VFD1100CH43A-00;
VFD900CH43A-21; VFD1100CH43A-21

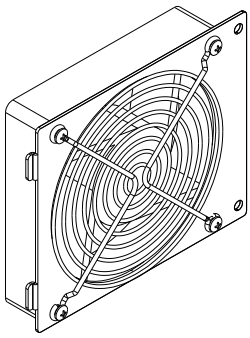

Figure 7-132

Frame F

Heat sink Fan Model "MKC-FFKM"

Applicable Model

VFD1320CH43A-00; VFD1600CH43A-00;
VFD1320CH43A-21; VFD1600CH43A-21

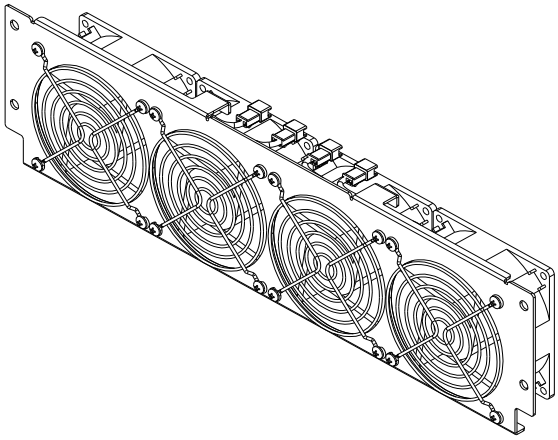

Figure 7-133

Frame F

Capacitor Fan Model "MKC-FFKB"

Applicable Model

VFD1320CH43A-00; VFD1600CH43A-00;

VFD1320CH43A-21; VFD1600CH43A-21

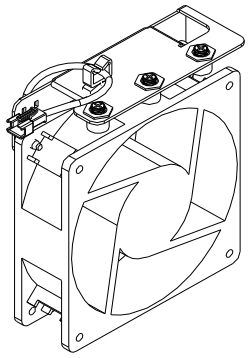

Figure 7-134

Frame G

Heat sink Fan Model "MKC-GFKM"

Applicable Model

VFD1600CH43A-00; VFD1850CH43A-00;

VFD2200CH43A-00; VFD1600CH43A-21;

VFD1850CH43A-21; VFD2200CH43A-21

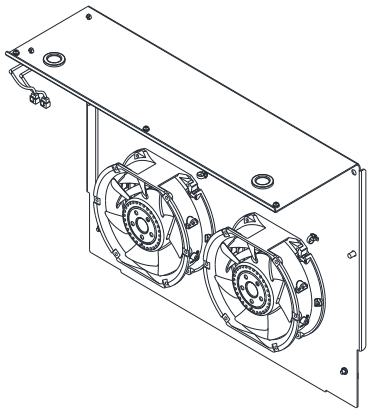

Figure 7-135

Frame H

Heat sink Fan Model "MKC-HFKM"

Applicable Model

Following models use two sets of MKC-HFKM fan kit:

VFD2800CH43A-00; VFD2800CH43C-21

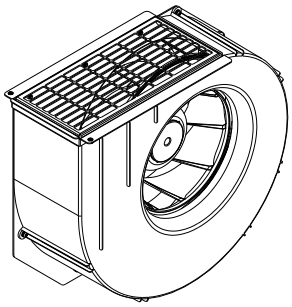

Figure 7-136

Frame H

Heatsink Fan Model "MKCHS-HFKM"

Applicable Model

Following models use three sets of MKC-HFKM fan kit:

VFD3150CH43A-00; VFD3150CH43A-21;

VFD3550CH43A-00; VFD3550CH43A-21;

VFD4500CH43A-00; VFD4500CH43A-21

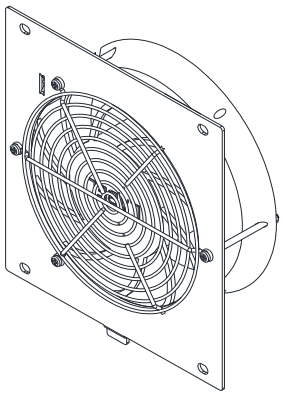

Figure 7-137

- Fan Removal

Frame A

Model “MKC-AFKM”: Heat Sink Fan

Applicable model

VFD015CH23A-21; VFD022CH23A-21; VFD037CH23A-21; VFD015CH43A-21; VFD022CH43A-21; VFD037CH43A-21; VFD055CH43A-21; VFD015CH4EA-21; VFD022CH4EA-21; VFD037CH4EA-21; VFD055CH4EA-21

1. Refer to Figure 1, press the tabs on both side of the fan to successfully remove the fan.
2. Disconnect the power terminal before removing the fan. (As shown below.)

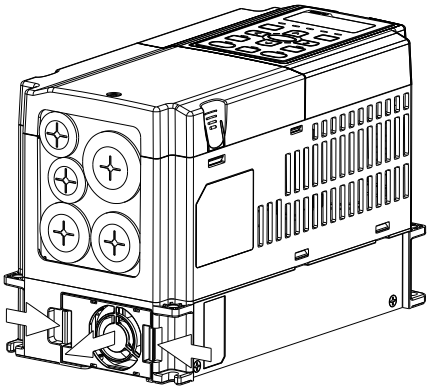

Figure 7-138

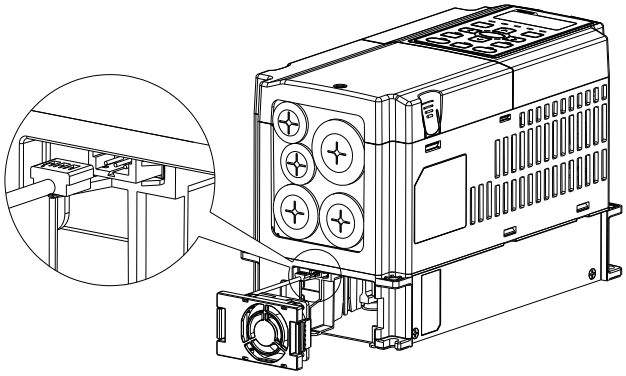

Figure 7-139

Frame B

Model “MKC-BFKM1” Heat Sink Fan

Applicable model

VFD055CH23A-21; VFD075CH43A-21; VFD075CH4EA-21

1. Refer to Figure 1, press the tab on both side of the fan to successfully remove the fan.
2. Disconnect the power terminal before removing the fan. (As shown below.)

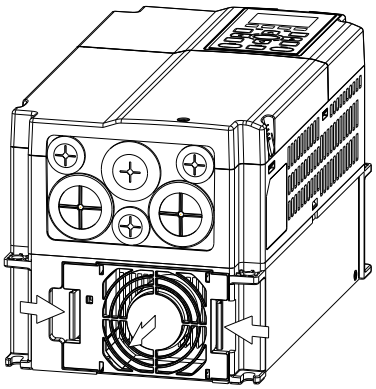

Figure 7-140

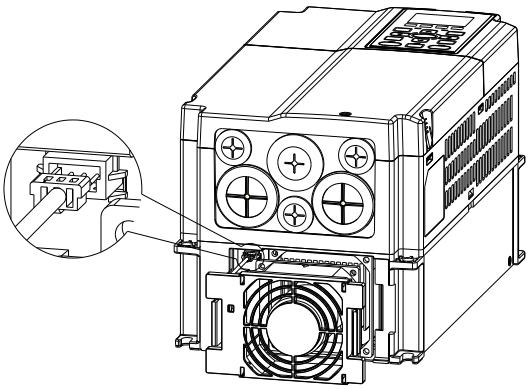

Figure 7-141

Frame B

Model “MKC-BFKM2” Heat Sink Fan

Applicable model

VFD075CH23A-21; VFD110CH23A-21; VFD110CH43A-21; VFD150CH43A-21; VFD110CH4EA-21; VFD150CH4EA-21

1. Refer to Figure 1, press the tab on both side of the fan to successfully remove the fan.
2. Disconnect the power terminal before removing the fan. (As shown below.)

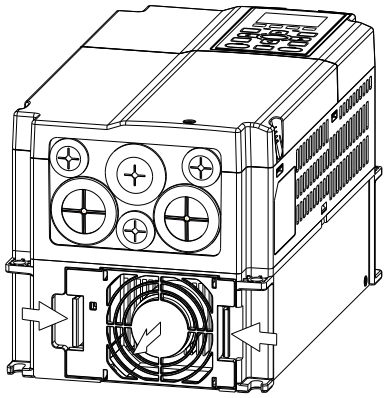

Figure 7-142

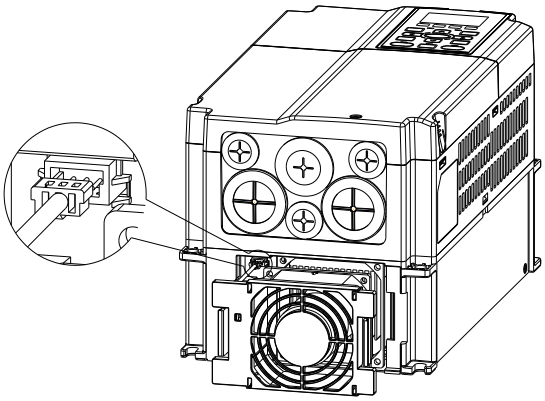

Figure 7-143

Frame B

Model “MKC-BFKB” Capacitor Fan

Applicable model

VFD055CH23A-21; VFD075CH23A-21; VFD110CH23A-21; VFD075CH43A/4EA-21; VFD110CH43A/4EA-21; VFD150CH43A/4EA-21

Disconnect fan power and pull out the fan by using flathead screwdriver. (As shown in the larger picture)

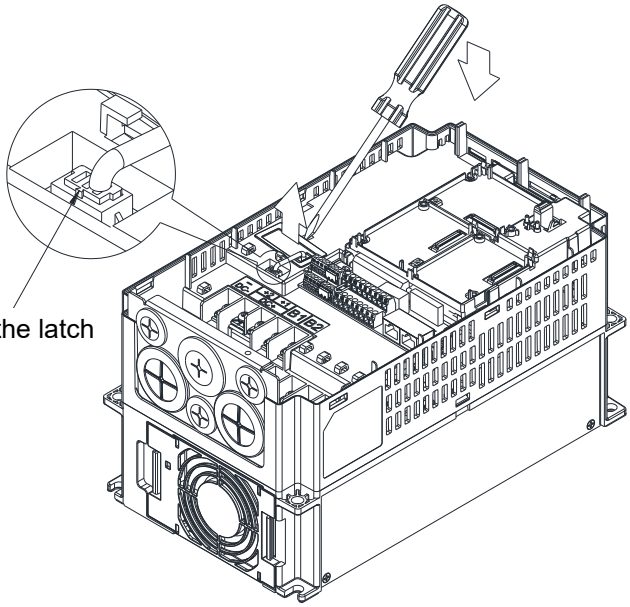

Figure 7-144

Frame C

Model “MKC-CFKM” Heat Sink Fan

Applicable model

- Single fan kit applicable models (only fan kit 1 is required to be installed):

VFD185CH43A-21, VFD220CH43-21, VFD300CH43A-21; VFD185CH4EA-21; VFD220CH4EA-21

- Duo fan kit applicable models (both fan kit 1 and 2 are required to be installed):

VFD150CH23A-21, VFD185CH23A-21, VFD300CH4EA-21

1. (As shown Figure 1) Before removing the fan, remove the cover by using a slotted screwdriver.

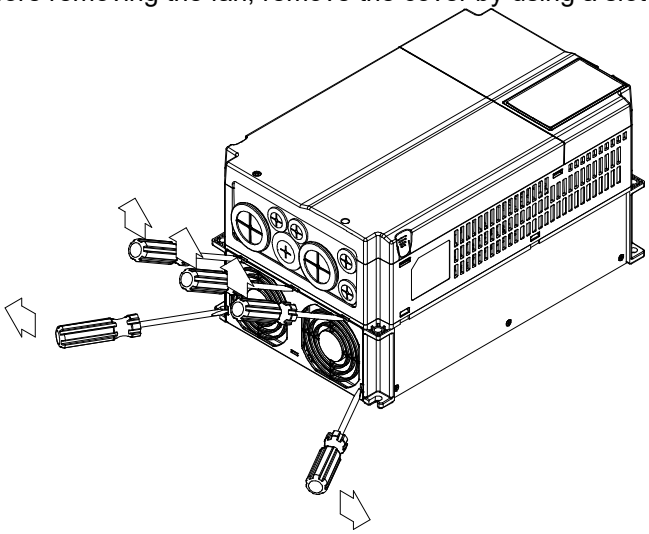

Figure 7-145

2. (As shown in Figure 2), remove the power connector, loosen the screw and remove the fan kit. When installing the fan kit, have the label on the fan kit facing inside of the motor drive.

   Screw torque: 10–12 kg-cm / (8.7–10.4 lb-in / (1.0–.1.2 Nm)

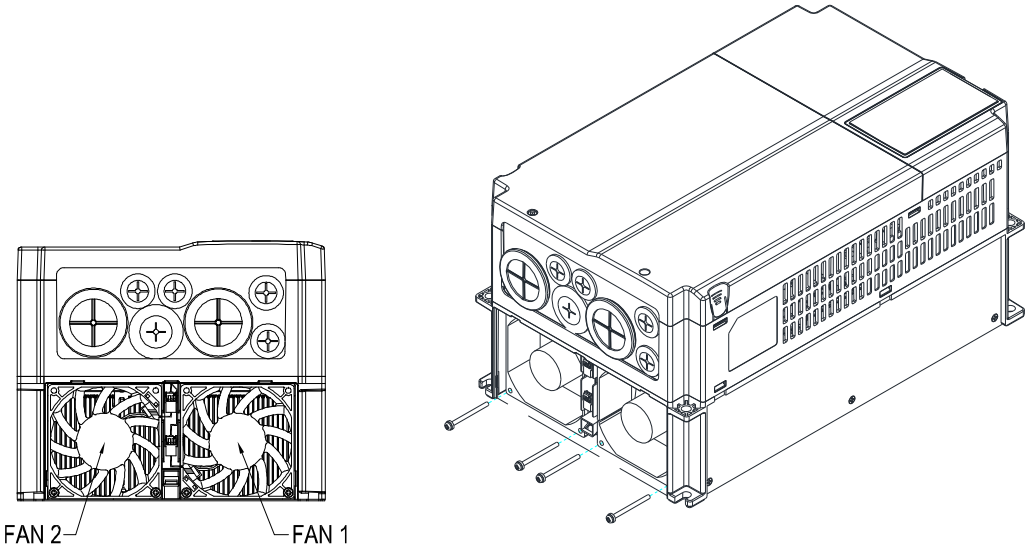

Figure 7-146

Frame C

Model “MKC-CFKB1” Capacitor Fan

Applicable model

VFD150CH23A-21; VFD185CH23A-21

Model “MKC-CFKB2” Capacitor Fan

Applicable model

VFD185CH43A-21; VFD220CH43A-21; VFD300CH43A-21; VFD185CH4EA-21; VFD220CH4EA-21; VFD300CH4EA-21

Disconnect fan power and pull out the fan by using flathead screwdriver. (As shown in the larger picture)

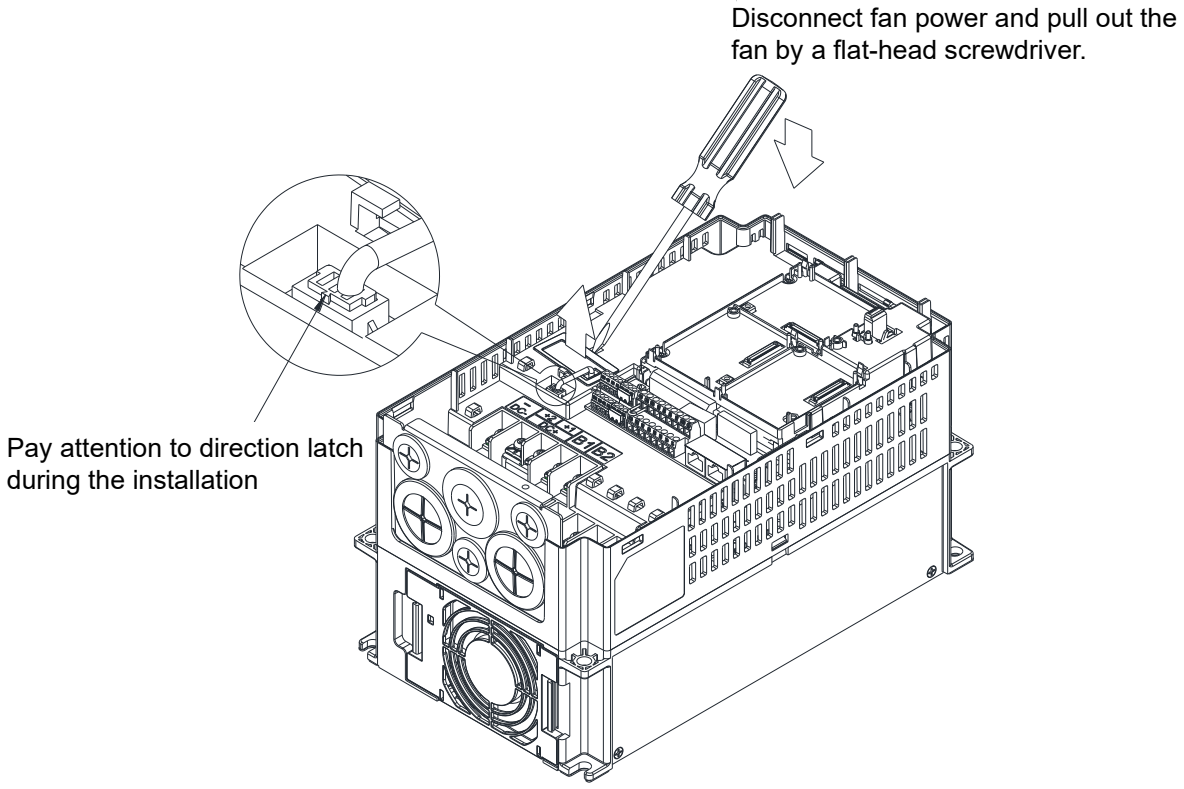

Figure 7-147

Frame D0-1 / D0-2

Model “MKC-DFKB” Capacitor Fan

Applicable model

VFD370CH43S-00; VFD370CH43S-21

1. Loosen screw 1 and screw 2, press the tab on the right and left to remove the cover, follow the direction the arrows indicate. Press on top of digital keypad to properly remove it.
   Screw 1, 2 Torque :12–15 kg-cm / (10.4–13 lb-in) / (1.2–1.5 Nm)

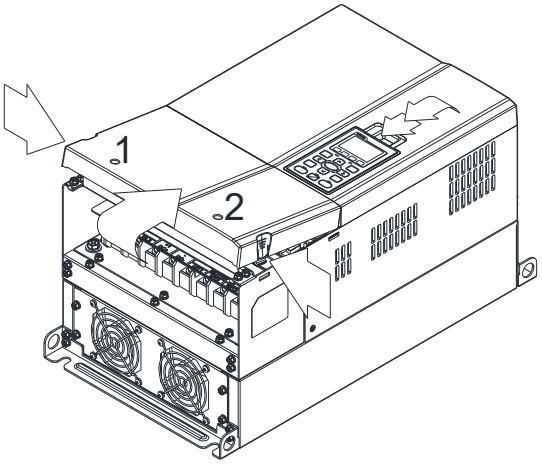

Figure 7-148

2. (Figure 2) Loosen screw 3, press the tab on the right and the left to remove the cover.
   Screw 3 Torque : 6–8 kg-cm / (5.2–6.9 lb-in) / (0.6–0.8 Nm)

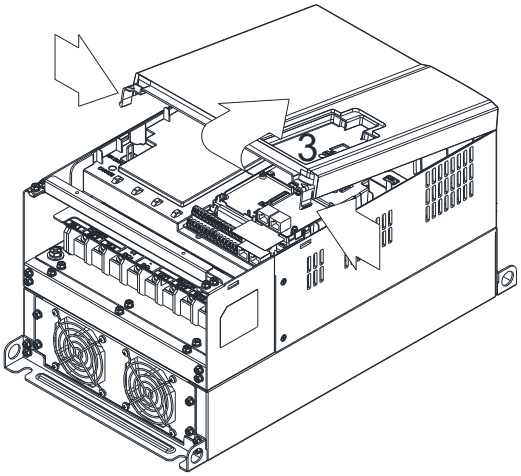

Figure 7-149

3. Loosen screw 4 (figure 3) and disconnect fan power and pull out the fan. (As shown in the enlarged picture 3)
   Screw 4 Torque: 10–12 kg-cm / (8.7–10.4 lb-in) / (1.0–1.2 Nm)

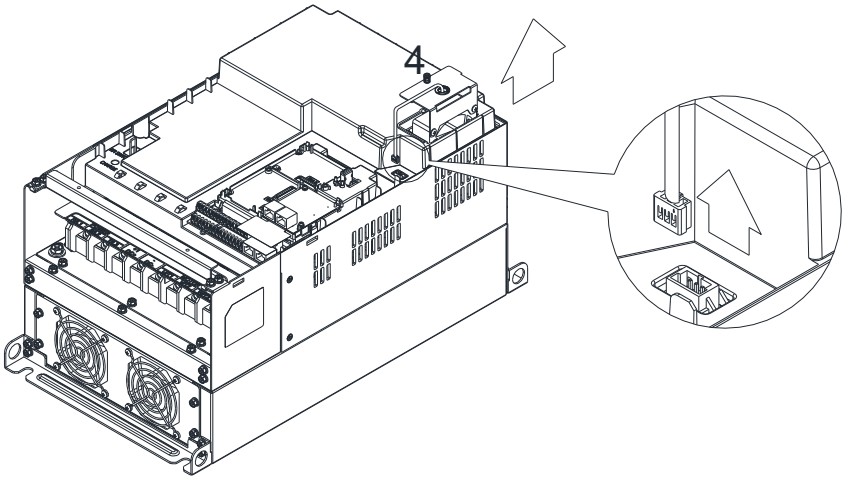

Figure 7-150

Frame D0

Model “MKC-D0FKM” Heat Sink Fan

Applicable model

VFD370CH43S-00; VFD370CH43S-21; VFD370CH43L-00

1. Loosen the screw and remove the fan kit. Screw torque: 24–26 kg-cm / (20.8–22.6 lb-in) / (2.4–2.5 Nm)
2. (As shown Figure 1) Before removing the fan, remove the cover by using a slotted screwdriver.

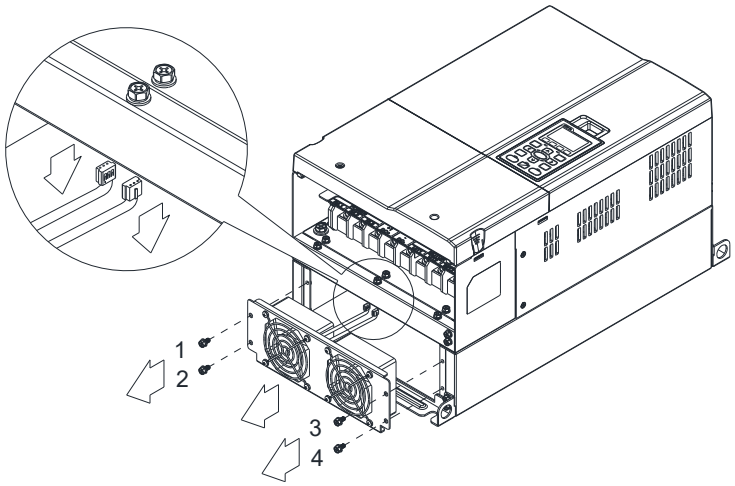

Figure 7-151

Frame D

Model “MKC-DFKB” Capacitor Fan

Applicable model

VFD220CH23A-00; VFD300CH23A-00; VFD370CH23A-00; VFD220CH23A-21; VFD300CH23A-21; VFD370CH23A-21; VFD450CH43A-00; VFD550CH43A-00; VFD750CH43A-00; VDF450CH43A-21; VFD550CH43A-21; VFD750CH43A-21; VFD450CH43L-00; VFD550CH43L-00; VFD750CH43L-00

1. Loosen screw 1 and screw 2, press the on the right and the left to remove the cover, follow the direction the arrows indicate. Press on top of digital keypad to properly remove it.
   Screw 1, 2 Torque: 12–15 kg-cm / (10.4–13 lb-in) / (1.2–1.5 Nm)
2. (Figure 2) Loosen screw 3, press the tab on the right and the left to remove the cover.
   Screw 3, 4 Torque : 6–8 kg-cm / (5.2–6.9 lb-in) / (0.6–0.8 Nm)

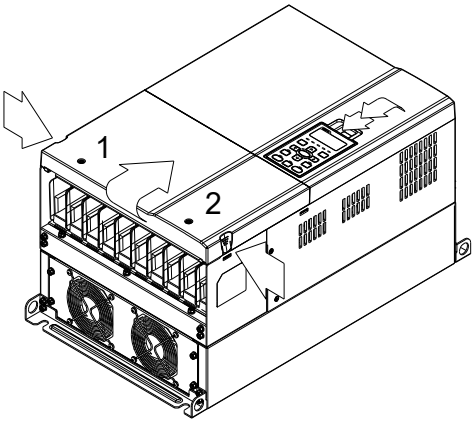

Figure 7-152

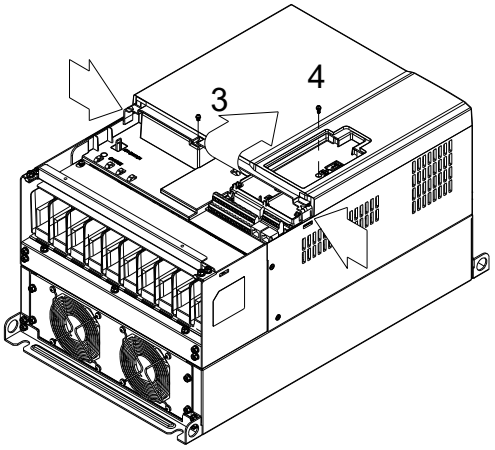

Figure 7-153

3. Loosen screw 5 (figure 3) and disconnect fan power and pull out the fan. (As shown in the enlarged picture 3)
   Screw 5 Torque: 10–12 kg-cm / (8.6–10.4 lb-in) / (1.0–1.2 Nm)

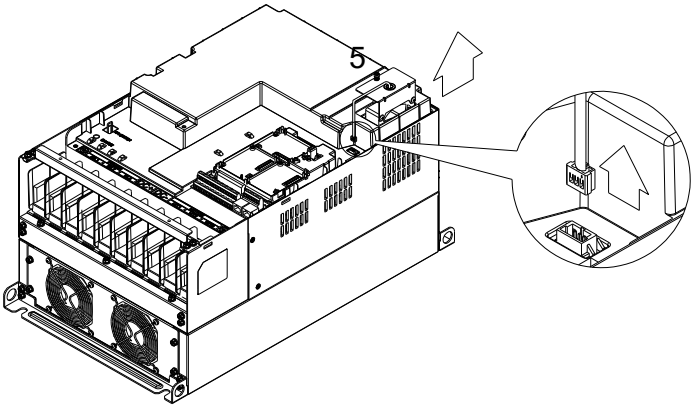

Figure 7-154

Frame D

Model “MKC-DFKM” Heat Sink Fan

Applicable model

VFD220CH23A-00; VFD300CH23A-00; VFD370CH23A-00; VFD220CH23A-21; VFD300CH23A-21; VFD370CH23A-21; VFD450CH43A-00; VFD550CH43A-00; VFD750CH43A-00; VFD450CH43A-21; VFD550CH43A-21; VFD750CH43A-21; VFD450CH43L-00; VFD550CH43L-00; VFD750CH43L-00

1. Loosen the screw and remove the fan kit. Screw torque: 24–26 kg-cm / (20.8–22.6 lb-in) / (2.4–2.5 Nm)
2. (As shown Figure 1) Before removing the fan, remove the cover by using a slotted screwdriver.

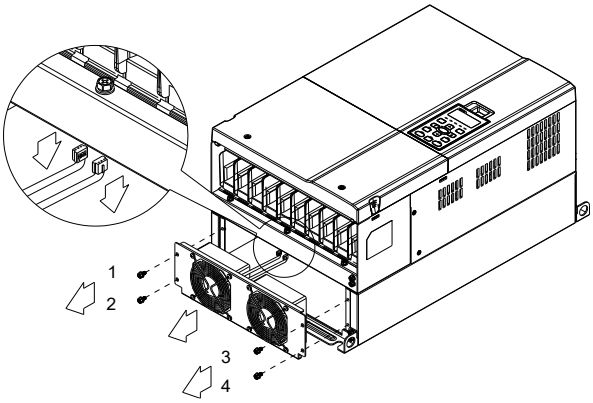

Figure 7-155

Frame E

Applicable model

- Applicable for MKC-EFKM1:
  VFD450CH23A-00; VFD550CH23A-00; VFD450CH23A-21; VFD550CH23A-21
- Applicable for MKC-EFKM2:
  VFD900CH43A-00; VFD1100CH43A-00; VFD900CH43A-21; VFD1100CH43A-21
- Applicable for MKC-EFKB:
  VFD450CH23A-00; VFD550CH23A-00; VFD450CH23A-21; VFD550CH23A-21; VFD900CH43A-00; VFD1100CH43A-00; VFD900CH43A-21; VFD1100CH43A-21

Model “MKC-EFKM1” Heat Sink Fan

Loosen screw 1–4, disconnect fan power, and pull out the fan. (As shown in the enlarged picture below) Screw1–4 Torque: 24–26 kg-cm / (20.8–22.6 lb-in) / (2.4–2.5 Nm)

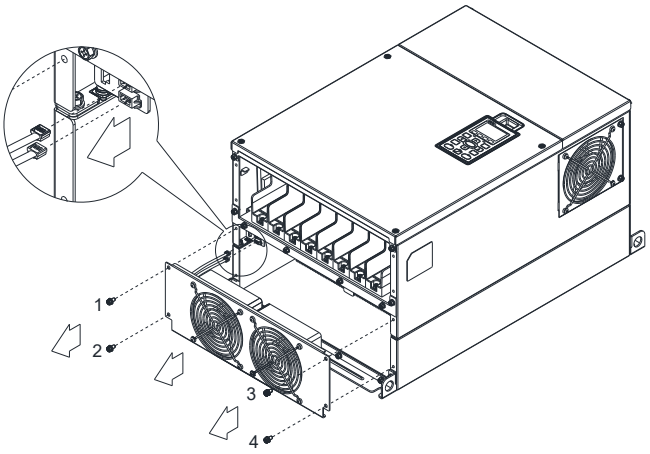

Figure 7-156

Model “MKC-EFKM2” Heat Sink Fan

Loosen screw 1–4, disconnect fan power, and pull out the fan. (As shown in the enlarged picture below)
Screw1–4 Torque: 24–26 kg-cm / (20.8–22.6 lb-in) / (2.4–2.5 Nm)

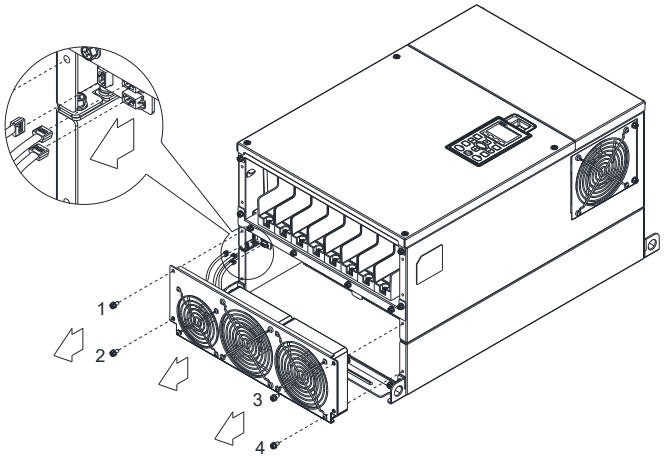

Figure 7-157

Model “MKC-EFKB” Capacitor Fan

Loosen screw 1–2 (figure 3), disconnect fan power, and pull out the fan. (As shown in the enlarged picture below)
Screw1–2 Torque: 24–26 kg-cm / (20.8–22.6 lb-in) / (2.4–2.5 Nm)

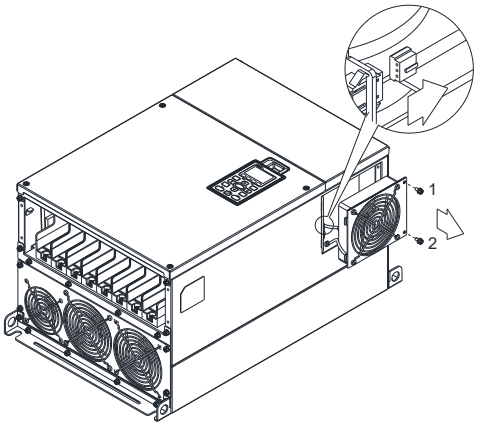

Figure 7-158

Frame F

Applicable model

VFD1320CH43A-00; VFD1600CH43A-00; VFD1320CH43A-21; VFD1600CH43A-21

Fan model “MKC-FFKM” Heat Sink Fan

Loosen the screws and plug out the power of fan before removing (as shown in the figure below).
Screw torque: 24–26 kg-cm / (20.8–22.6 Ib-in) / (2.4–2.5 Nm)

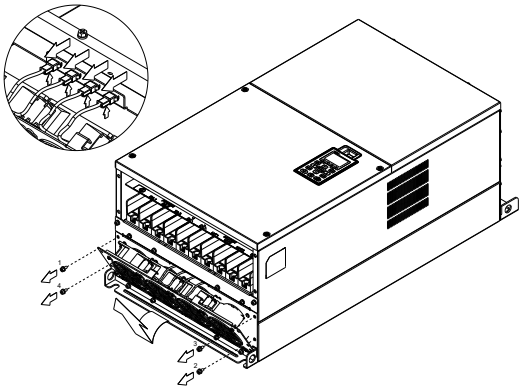

Figure 7-159

Fan model “MKC-FFKB” Capacitor Fan

1. Loosen the screw (figure 1) and removes the cover.
   Screw torque: 12–15 kg-cm / (10.4–13 lb-in) / (1.2–1.5 Nm)

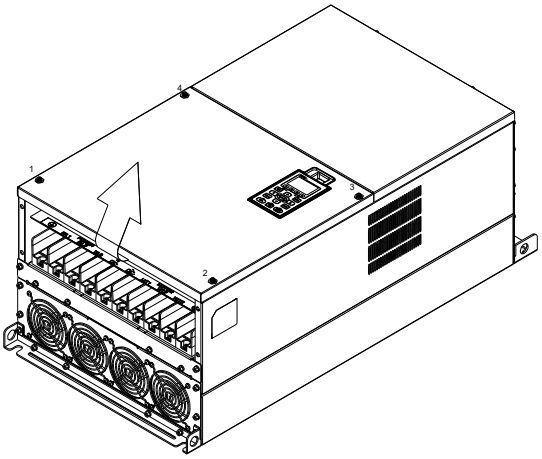

Figure 7-160

2. Loosen the screw (figure 2) and removes the cover.
   Screw torque: 24–26 kg-cm / (20.8–22.6 lb-in) / (2.4–2.5 Nm)

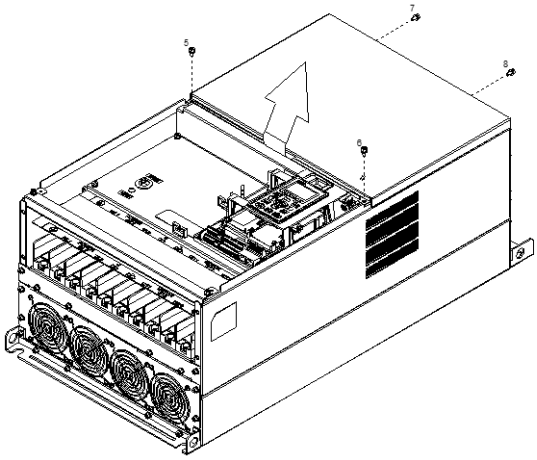

Figure 7-161

3. Loosen the screws and remove the fan. (As shown in the figure below.)
   Screw torque: 12–15 kg-cm / (10.4–13.0 lb-in) / (1.2–1.5 Nm)

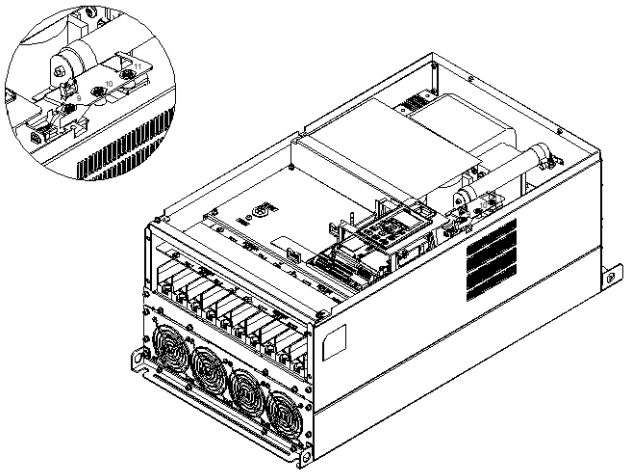

Figure 7-162

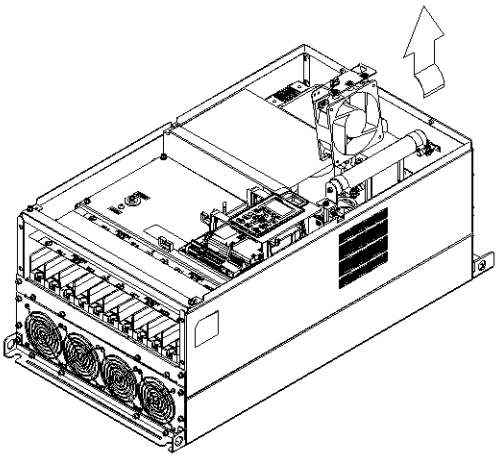

Figure 7-163

Frame G

Applicable model

VFD1600CH43A-00; VFD1850CH43A-00; VFD2200CH43A-00; VFD1600CH43A-21; VFD1850CH43A-21; VFD2200CH43A-21

Fan model “MKC-GFKM” Heat Sink Fan

1. Loosen the screw (as shown in the figure below) and remove the cover. Screw torque: 12–15 kg-cm / (10.4–13.1 lb-in) / (1.2–1.5 Nm)

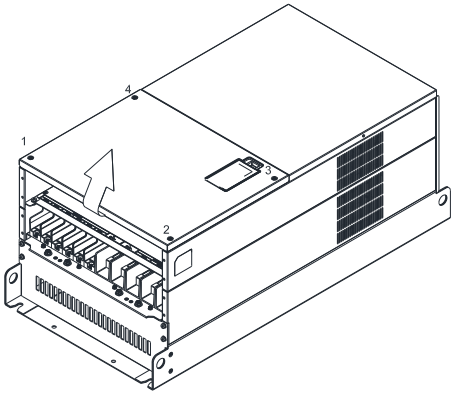

Figure 7-164

2. Loosen the screws (as shown 1–8 in the figure below) M6 Screw torque: 35–40 kg-cm / (30.4–34.7 lb-in) / (3.4–3.9 Nm)
3. Loosen the screws (as shown 9–10 in the figure below) and remove the cover.
   M4 Screw torque: 14–16 kg-cm / (12.2–13.9 lb-in) / (1.4–1.6 Nm)

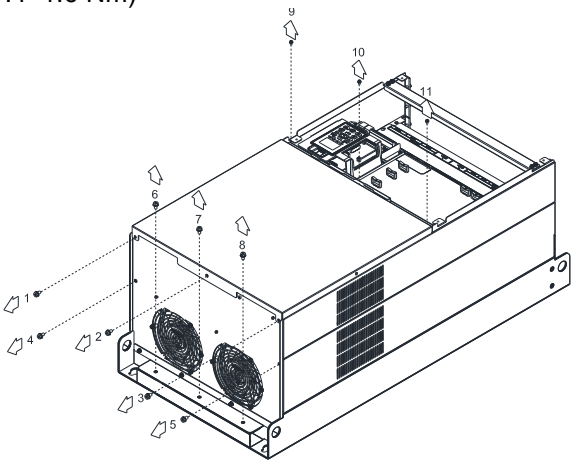

Figure 7-165

4. Loosen screw 1–3 and remove the protective ring (as shown in the figure below). Screw torque: 14–16 kg-cm / (12.2–13.9 lb-in) / (1.4–1.6 Nm)

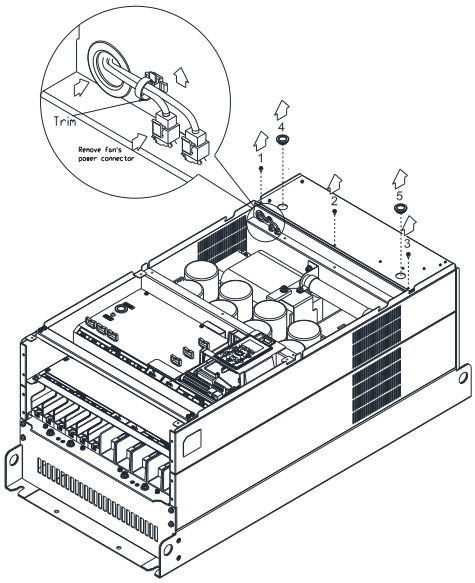

Figure 7-166

5. Lift the fan by putting your finger through the protective holes, as indicates 1 and 2 in the figure below.

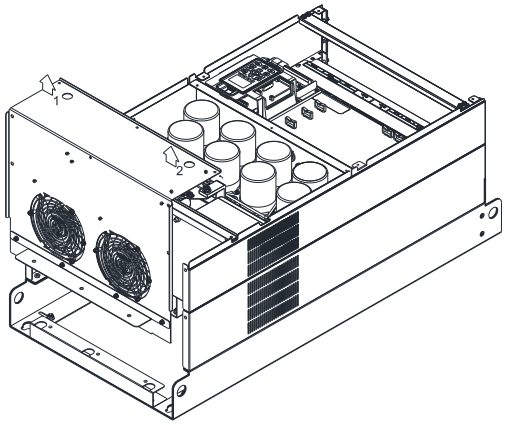

Figure 7-167

6. For old drives switching new fans, follow the steps below:
   Loosen screws 1–5, remove the cover (as shown in the figure below). M4 Screw torque: 14–16 kg-cm / (12.2–13.9 lb-in) / (1.4–1.6 Nm)

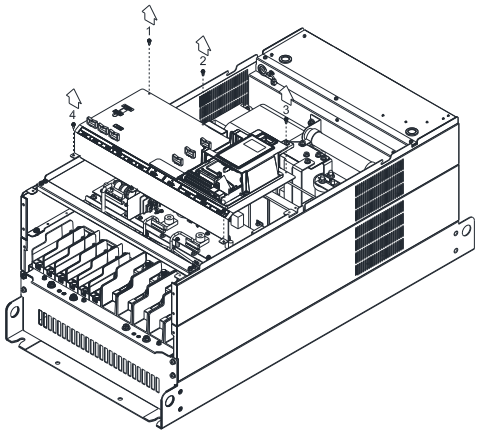

Figure 7-168

7. Add cable model 3864483201 to connect the power board and fan connector. (The cable 3864483201 goes with the fan as accessory.)

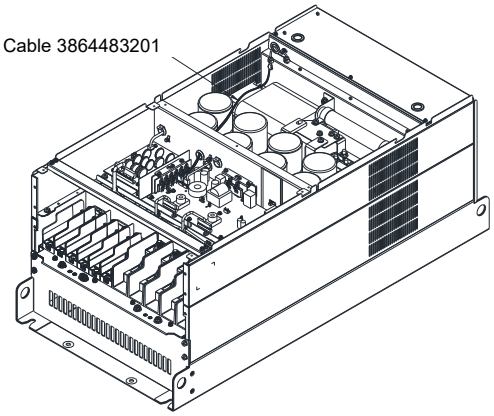

Figure 7-169

Frame H

Applicable model

VFD2800CH43A-00; VFD2800CH43C-21

Fan model “MKC-HFKM” Heat Sink Fan

1. Loosen the screw and remove the top cover (as shown in the figure below). Screw torque: 14–16 kg-cm / (12.2–13.9 lb-in) / (1.4–1.6 Nm)

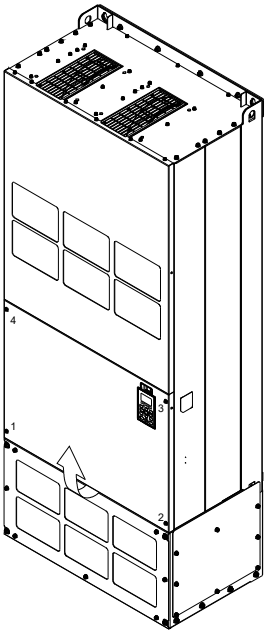

Figure 7-170

2. Loosen the screw and remove the top cover (figure 2). Screw torque: 24–26 kg-cm / (20.8–22.6 lb-in) / (2.4–2.5 Nm)

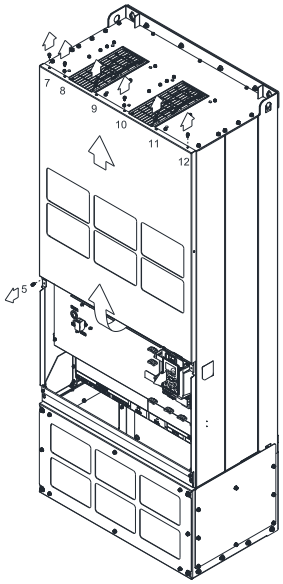

Figure 7-171

3. Press the latch to disconnect the fan power (as shown in the figure below).

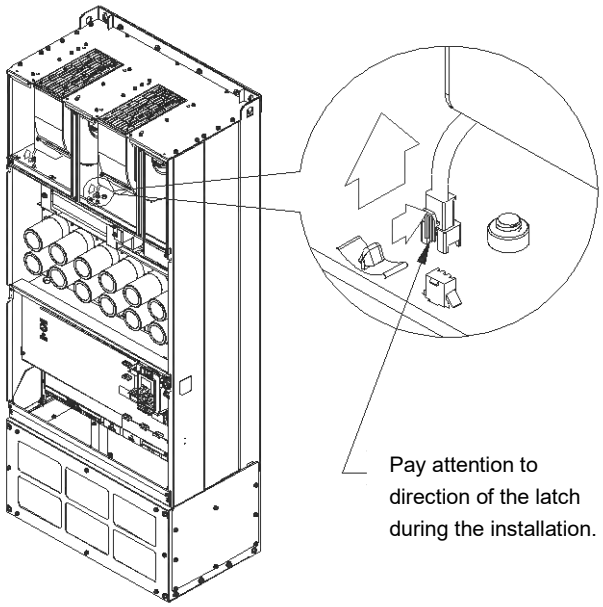

Figure 7-172

4. Loosen the screw 13–18 and remove the fan. Screw torque: 24–26 kg-cm / (20.8–22.6 Ib-in) / (2.4–2.5 Nm) (As shown in the figure below)

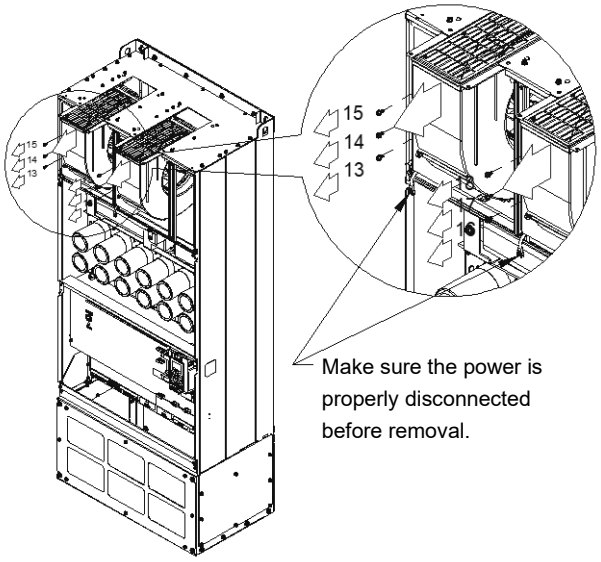

Figure 7-173

Frame H

Applicable model

VFD3150CH43A-00; VFD3150CH43A-21; VFD3550CH43A-00; VFD3550CH43A-21; VFD4500CH43A-00; VFD4500CH43A-21

Fan model “MKCHS-HFKM” Heat Sink Fan

1. Loosen the screw 1–4 and remove the top cover (figure 1). Screw torque: 14–16 kg-cm / (12.2–13.9 Ib-in.) / (1.4–1.6 Nm)

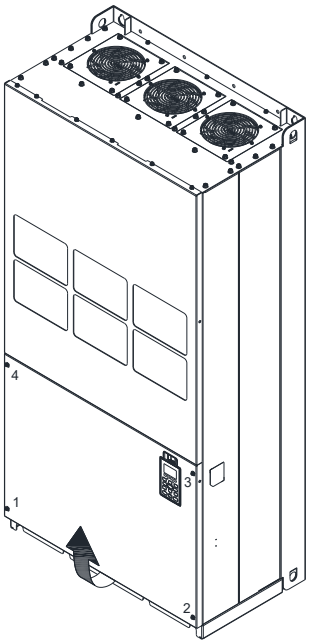

Figure 7-174

2. Loosen the screw 5–12 and remove the top cover (figure 2). Screw torque: 24–26 kg-cm / (20.8–22.6 Ib-in.) / (2.4–2.5 Nm)

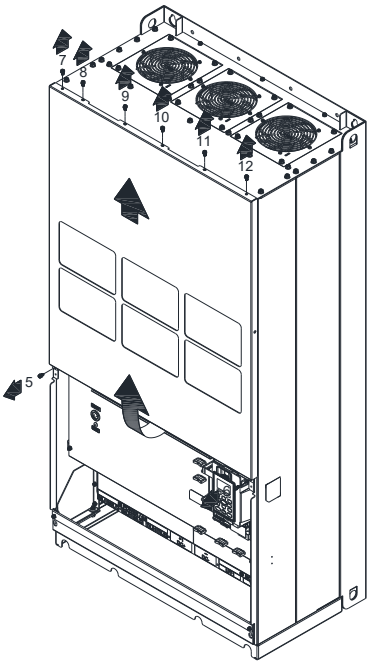

Figure 7-175

3. Press the latch to disconnect fan power, and cut the cable tie.

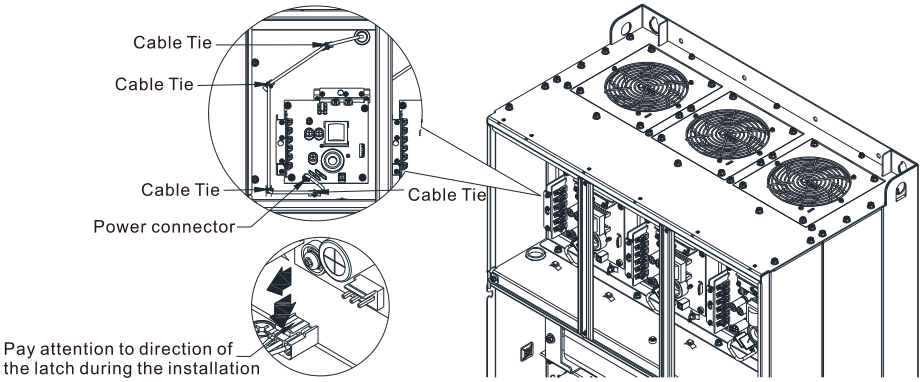

Figure 7-176

4. Two sets of fans: Loosen the screw 13–16 / 21–24 and remove the fan A and C.
   Three sets of fans: Loosen the screw 13–24 and remove the fan A, B, and C.
   Screw torque: 35–45 kg-cm / (30.4–39.1 lb-in.) / (3.4–4.4 Nm)

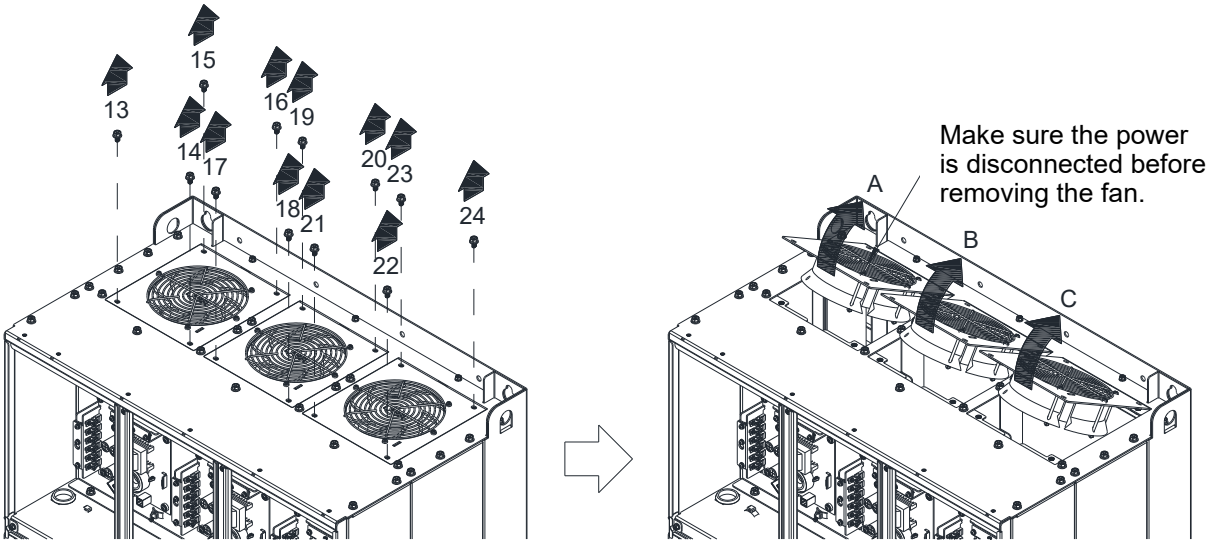

Figure 7-177

7-10 Flange Mounting Kit

Applicable Models, Frame A~F

Frame A

"MKC-AFM1"

Applicable model

VFD015CH23A-21; VFD022CH23A-21; VFD022CH43A-21; VFD022CH4EA-21

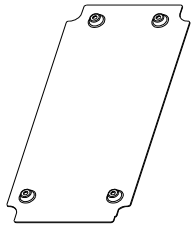

Accessory 1*1

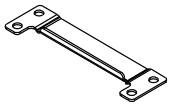

Accessory 2*2

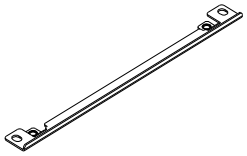

Accessory 3*2

Screw 1*4
M3*P 0.5
L= 6 mm

Screw 2*8
M6*P 1.0
L=16 mm

"MKC-AFM"

Applicable model

VFD007CH23A-21; VFD037CH23A-21; VFD007CH43A-21; VFD150CH43A-21; VFD037CH43A-21; VFD055CH43A-21; VFD007CH4EA-21; VFD015CH4EA-21; VFD037CH4EA-21; VFD055CH4EA-21

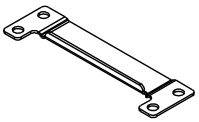

Accessory 2*2

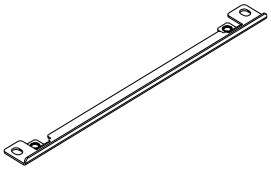

Accessory t 3*2

Screw *8
M6*P 1.0; L=16mm

Cutout dimension

Unit: mm (inch)

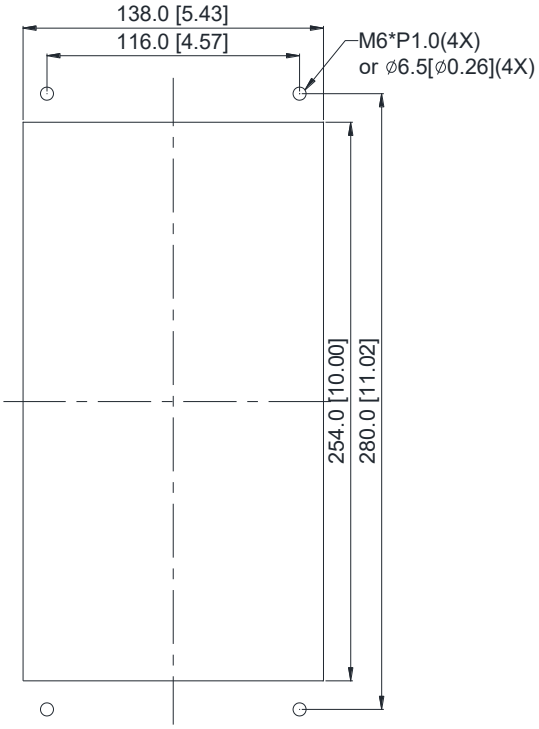

Figure 7-178

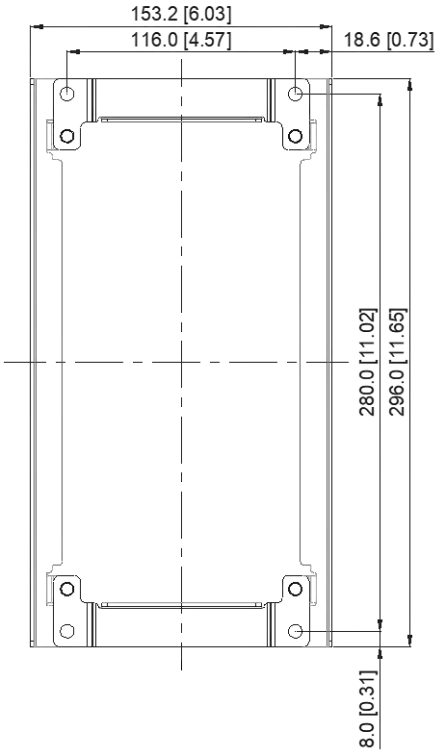

Figure 7-179

“MKC-AFM1” Installation

1. Install accessory 1 by fastening 4 of the screw 1(M3) (as shown in the figure below).
   Screw torque: 6–8 kg-cm / (5.21–6.94 lb-in) / (0.6–0.8 Nm)

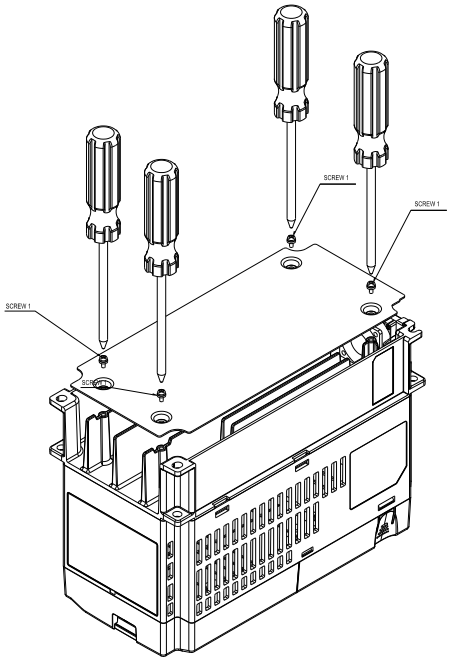

Figure 7-180

2. Install accessory 2 & 3 by fastening 2 of the screw 2 (M6) (as shown in the figure below).
   Screw torque: 25–30 kg-cm / (21.7–26 lb-in) / (2.5–2.9 Nm)

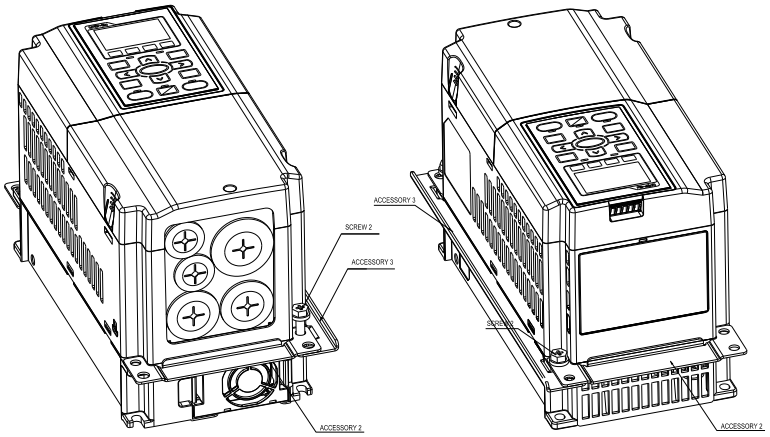

Figure 7-181

3. Install accessory 2 & 3 by fastening 2 of the screw 2 (M6) (as shown in the figure below).
   Screw torque: 25–30 kg-cm / (21.7–26 lb-in) / (2.5–2.9 Nm)

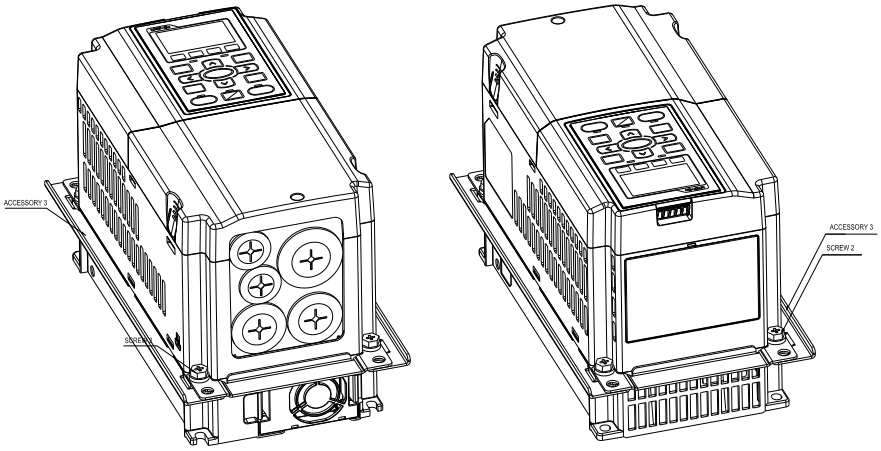

Figure 7-182

4. Plate installation, place 4 of the screw 2 (M6) (as shown in the figure below) through accessory 2 & 3 and the plate then fasten the screws. Screw torque: 25–30 kg-cm / (21.7–26 lb-in) / (2.5–2.9 Nm)

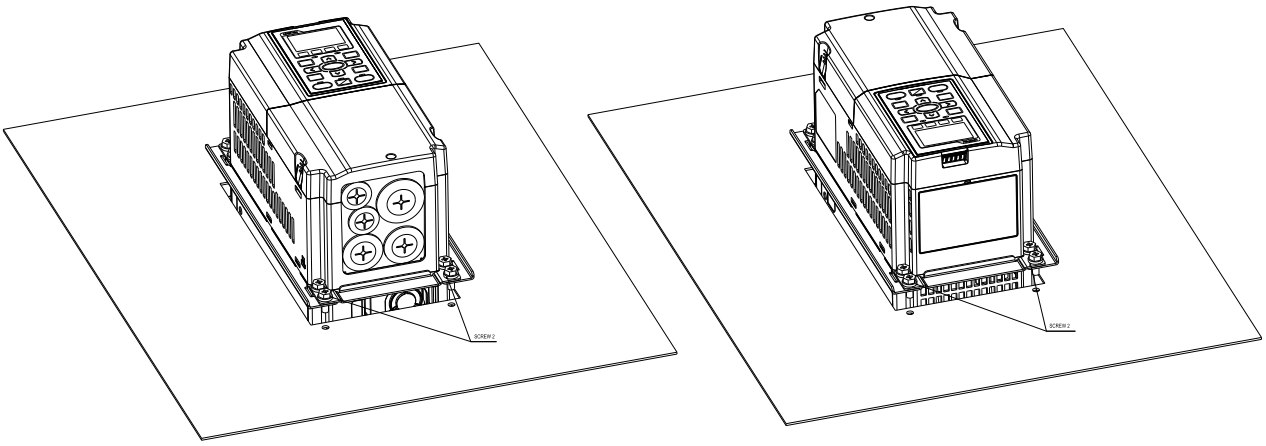

Figure 7-183

“MKC-AFM” Installation

1. Fasten screw*2 (M6) and accessory 2 & 3.
   Screw torque: 25–30 kg-cm / (21.7–26 lb-in) / (2.5–2.9 Nm) (as shown in the figure below).

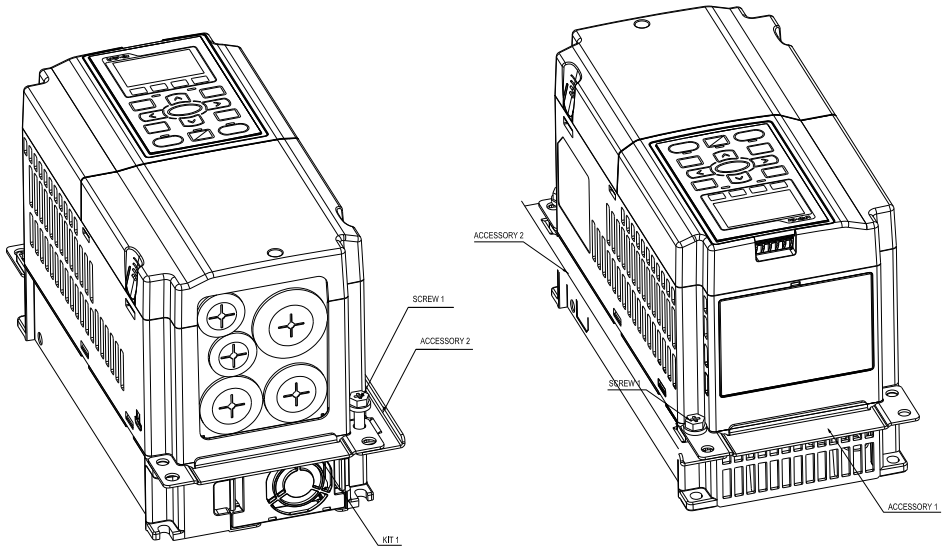

Figure 7-184

2. Fasten screw*2 (M6) and accessory 2 & 3.
   Screw torque: 25–30 kg-cm / (21.7–26 lb-in) / (2.5–2.9 Nm) (as shown in the figure below).

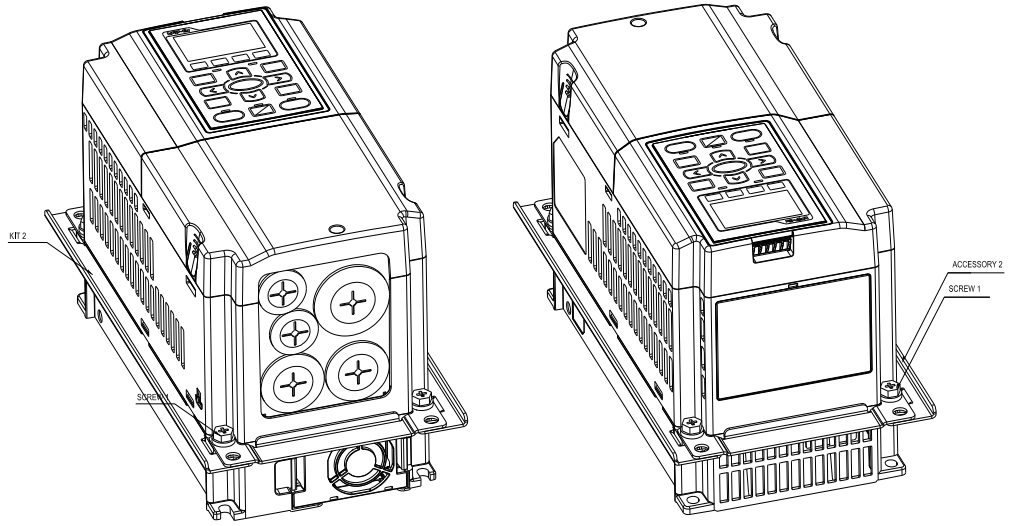

Figure 7-185

3. Plate installation, place 4 of the screw *4 (M6) through accessory 2 & 3 and the plate then fasten the screws.
   Screw torque: 25–30 kg-cm / (21.7–26 lb-in) / (2.5–2.9 Nm) (as shown in the figure below).

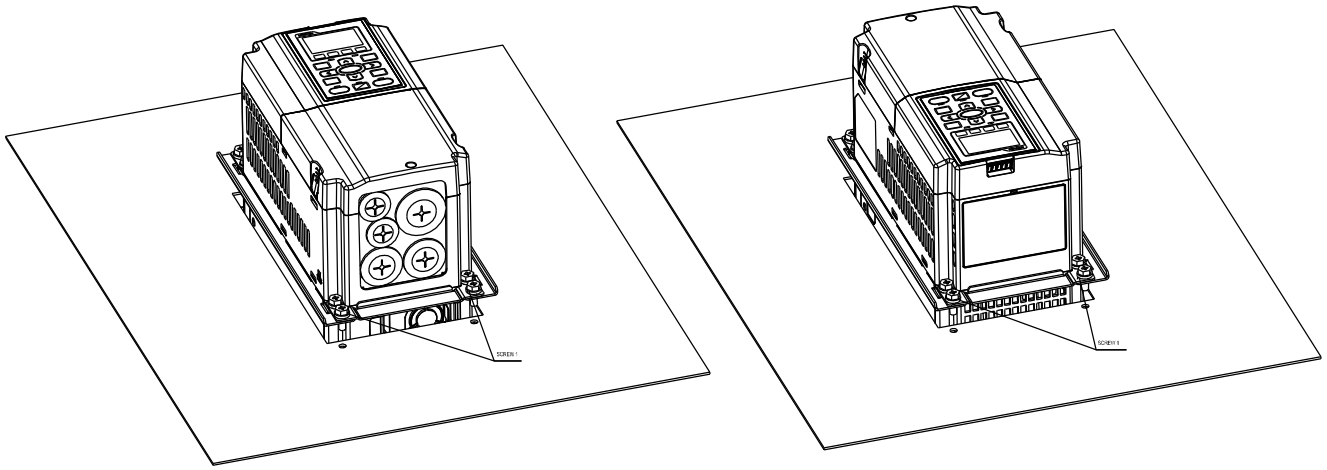

Figure 7-186

Frame B

"MKC-BFM"

Applicable model

VFD055CH23A-21; VFD075CH23A-21; VFD110CH23A-21; VFD075CH43A-21; VFD075CH4EA-21; VFD110CH43A-21; VFD110CH4EA-21; VFD150CH43A-21; VFD150CH4EA-21

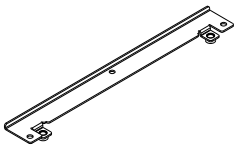

Accessory 1*2

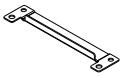

Accessory 2*2

Screw 1 *4
M8*P 1.25

Screw 2*6
M6*P 1.0

Cutout dimension

Unit: mm (inch)

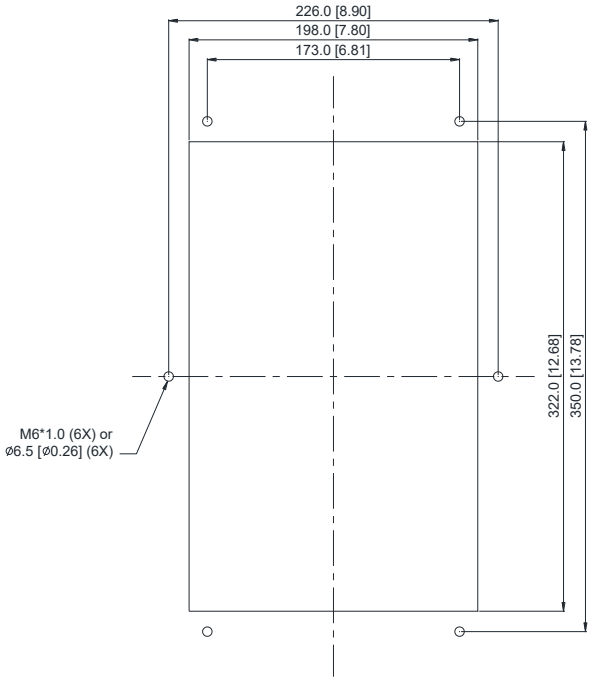

Figure 7-187

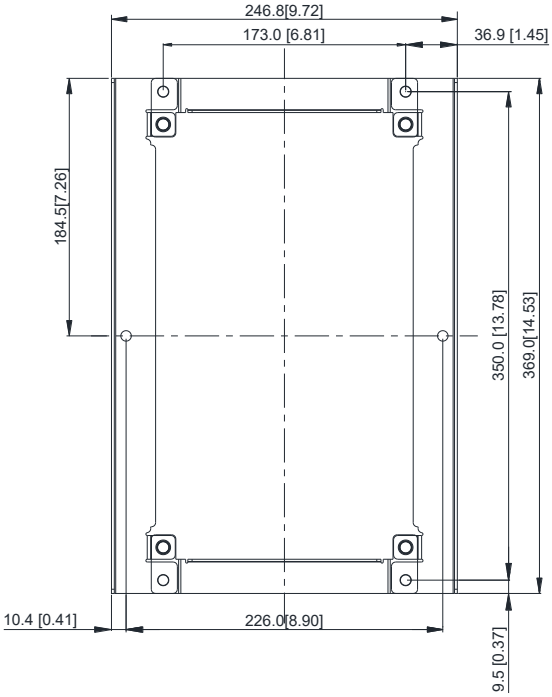

Figure 7-188

“MKC-BFM” Installation

1. Install accessory 1 & 2 by fastening 4 of the screw 1 (M8). (As shown in the following figure)
   Screw torque: 40–45 kg-cm / (34.7–39.0 Ib-in) / (3.9–4.4 Nm)

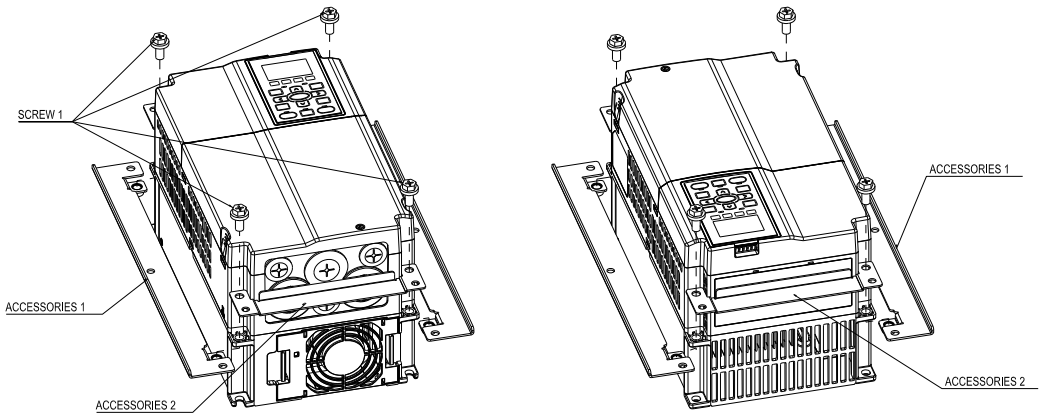

Figure 7-189

2. Plate installation, place 6 of the screw 2 (M6) through accessory 1 & 2 and the plate then fasten the screws.
   Screw torque: 25–30 kg-cm / (21.7–26 Ib-in) / (2.5–2.9 Nm). (As shown in the following figure)

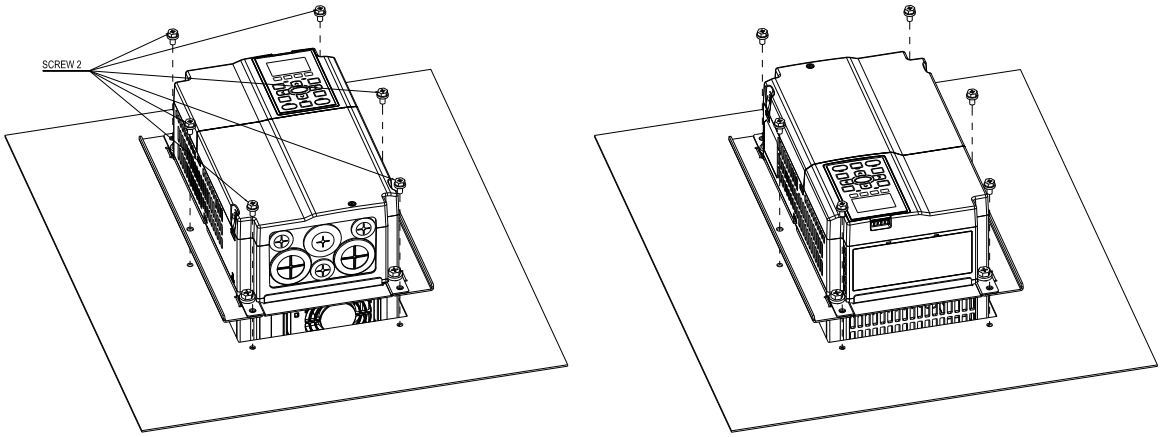

Figure 7-190

Frame C

"MKC-CFM"

Applicable model

VFD150CH23A-21; VFD185CH23A-21; VFD220CH23A-21; VFD185CH43A-21; VFD185CH4EA-21; VFD220CH43A-21; VFD220CH4EA-21; VFD300CH43A-21; VFD300CH4EA-21

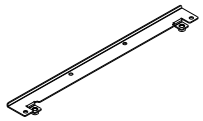

Accessory 1*2

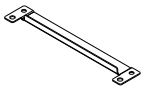

Accessory 2*2

Screw 1*4
M8*P 1.25

Screw 2*8
M6*P 1.0

Cutout dimension

Unit: mm (inch)

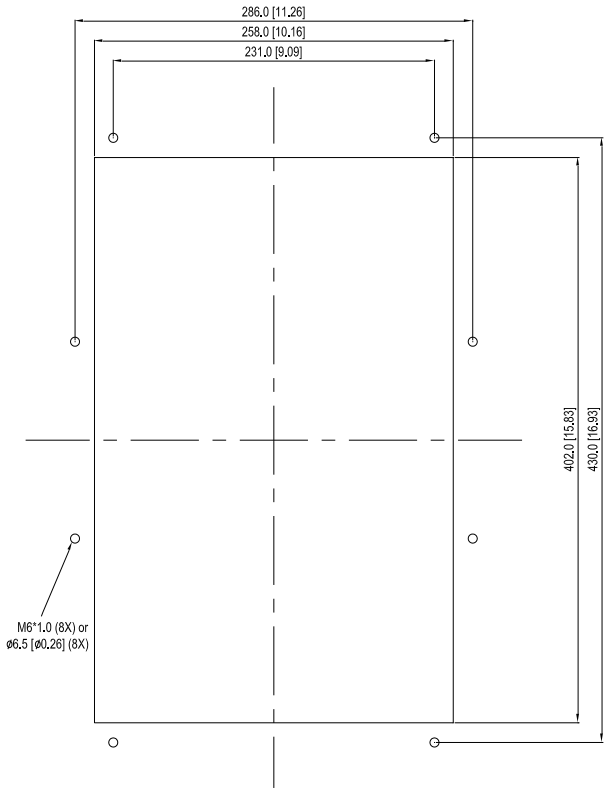

Figure 7-191

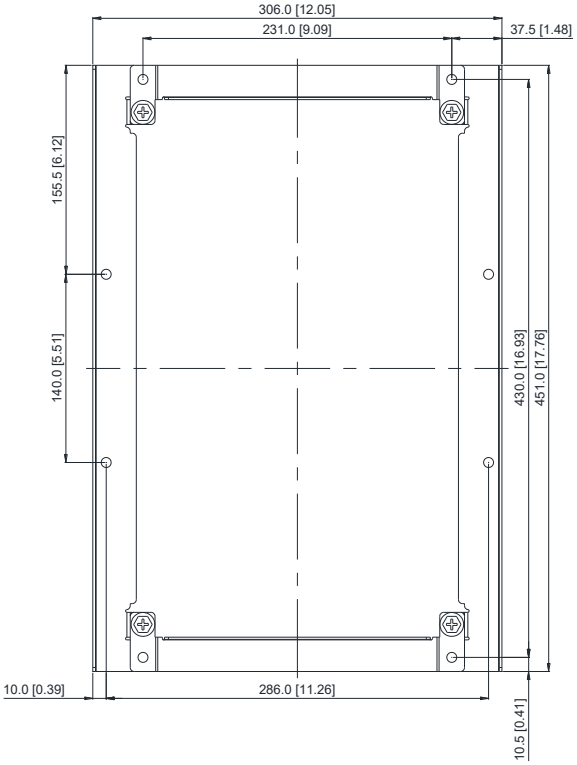

Figure 7-192

“MKC-CFM” Installation

1. Install accessory 1 & 2 by fastening 4 of the screw 1(M8). (As shown in the following figure)
   Screw torque: 50–55 kg-cm / (43.4–47.7 Ib-in) / (4.9–5.4 Nm)

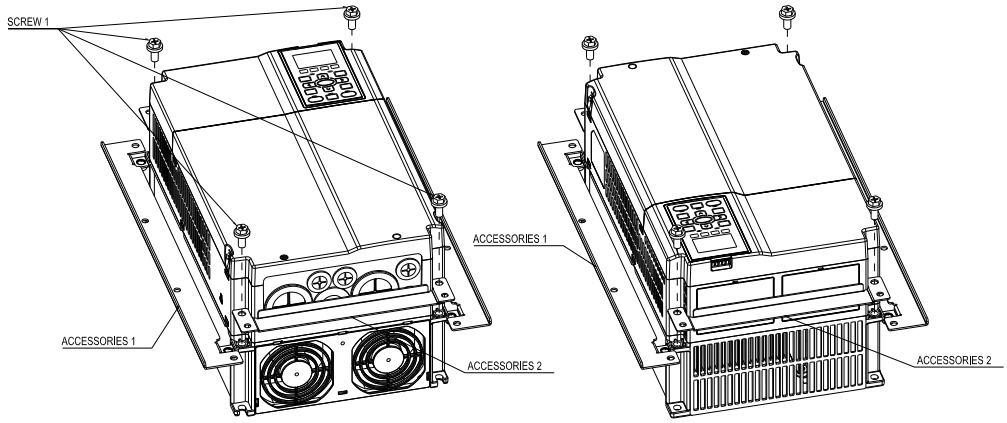

Figure 7-193

2. Plate installation, place 8 of the screw 2 (M6) through Accessory 1 & 2 and the plate then fasten the screws.
   Screw torque: 25–30 kg-cm / (21.7–26 Ib-in) / (2.5–2.9 Nm). (As shown in the following figure)

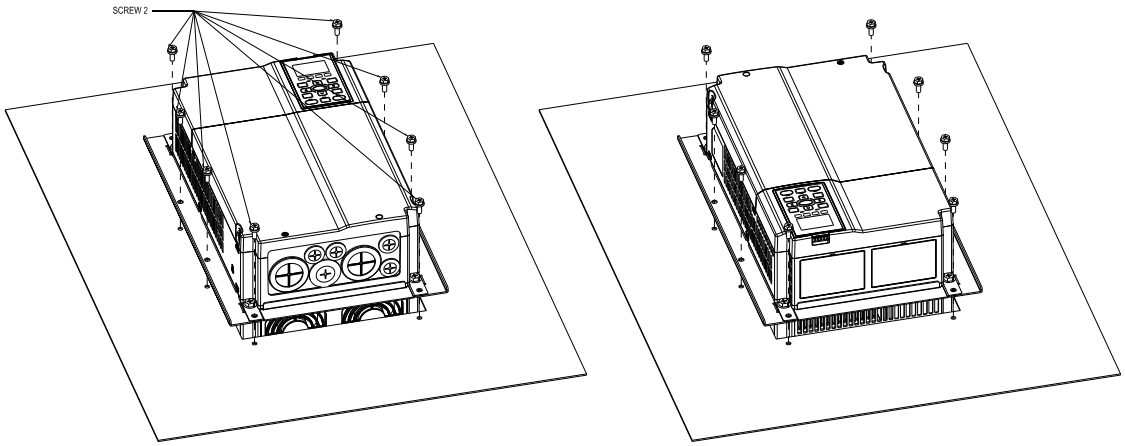

Figure 7-194

Frame D0-1 / D0-2

Applicable model

VFD370CH43S-00; VFD370CH43S-21

Cutout dimension

Unit: mm (inch)

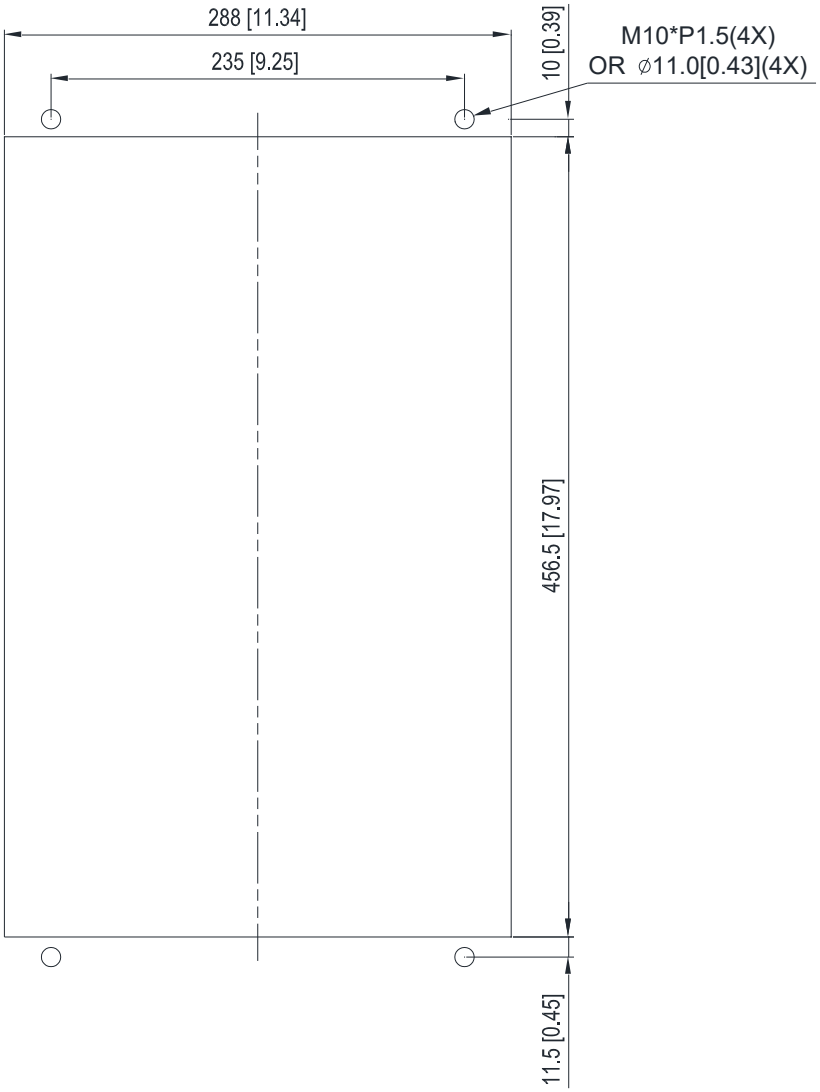

Figure 7-195

Frame D0-3

Applicable model

VFD370CH43L-00

Cutout dimension

Unit: mm (inch)

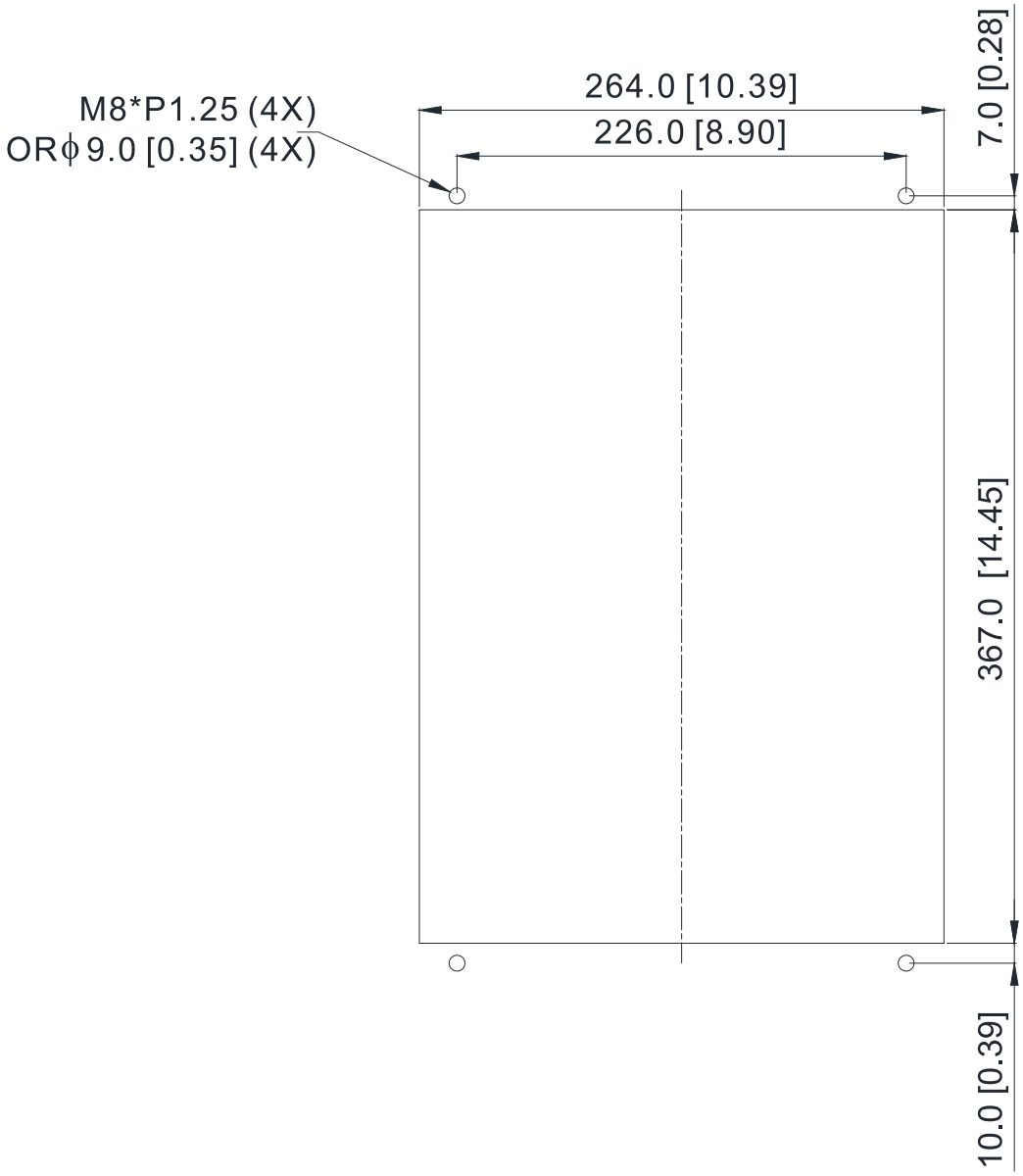

Figure 7-196

Frame D

Applicable model

VFD220CH23A-00; VFD300CH23A-00; VFD370CH23A-00; VFD370CH23A-21; VFD550CH43A-00; VFD550CH43A-21; VFD750CH43A-00; VFD750CH43A-21

Cutout dimension

Unit: mm (inch)

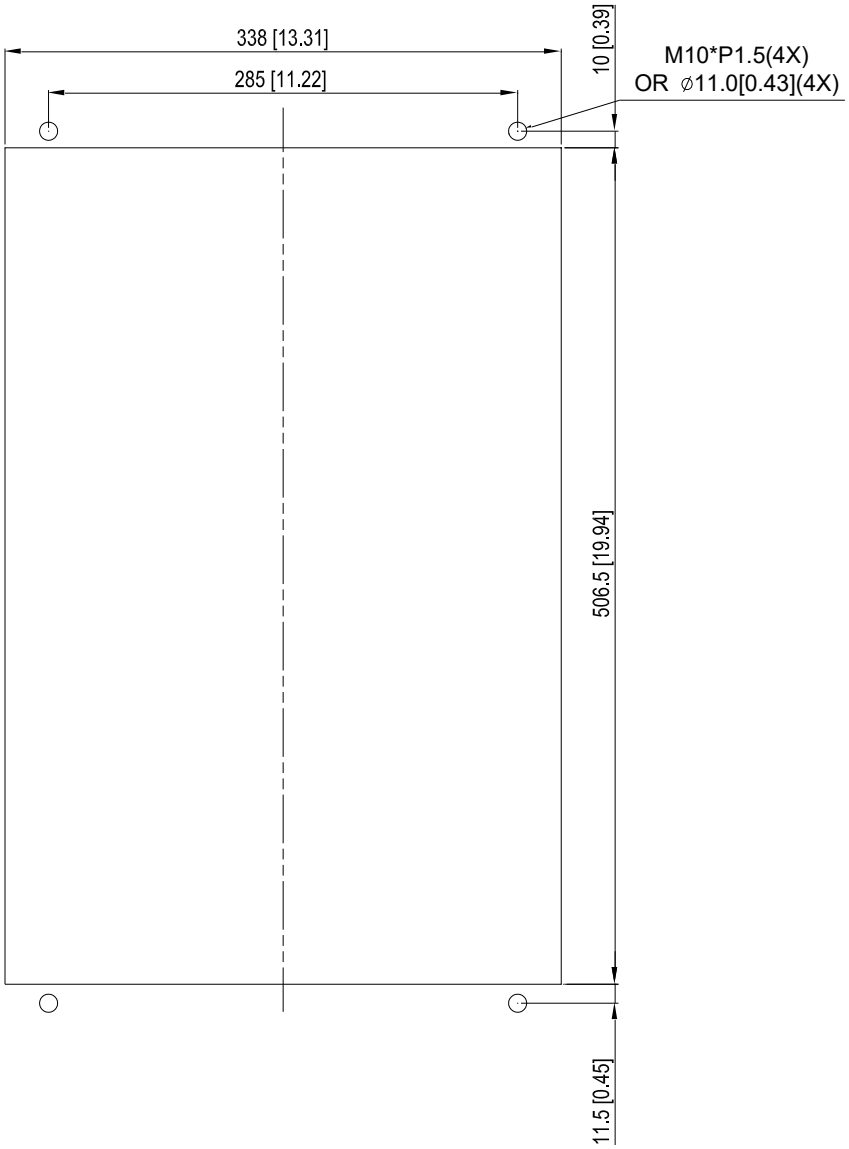

Figure 7-197

Frame E

Applicable model

VFD450CH23A-00; VFD450CH23A-21; VFD550CH23A-00; VFD550CH23A-21; VFD750CH23A-00; VFD750CH23A-21; VFD900CH43A-00; VFD900CH43A-21; VFD1100CH43A-00; VFD1100CH43A-21

Cutout dimension

Unit: mm (inch)

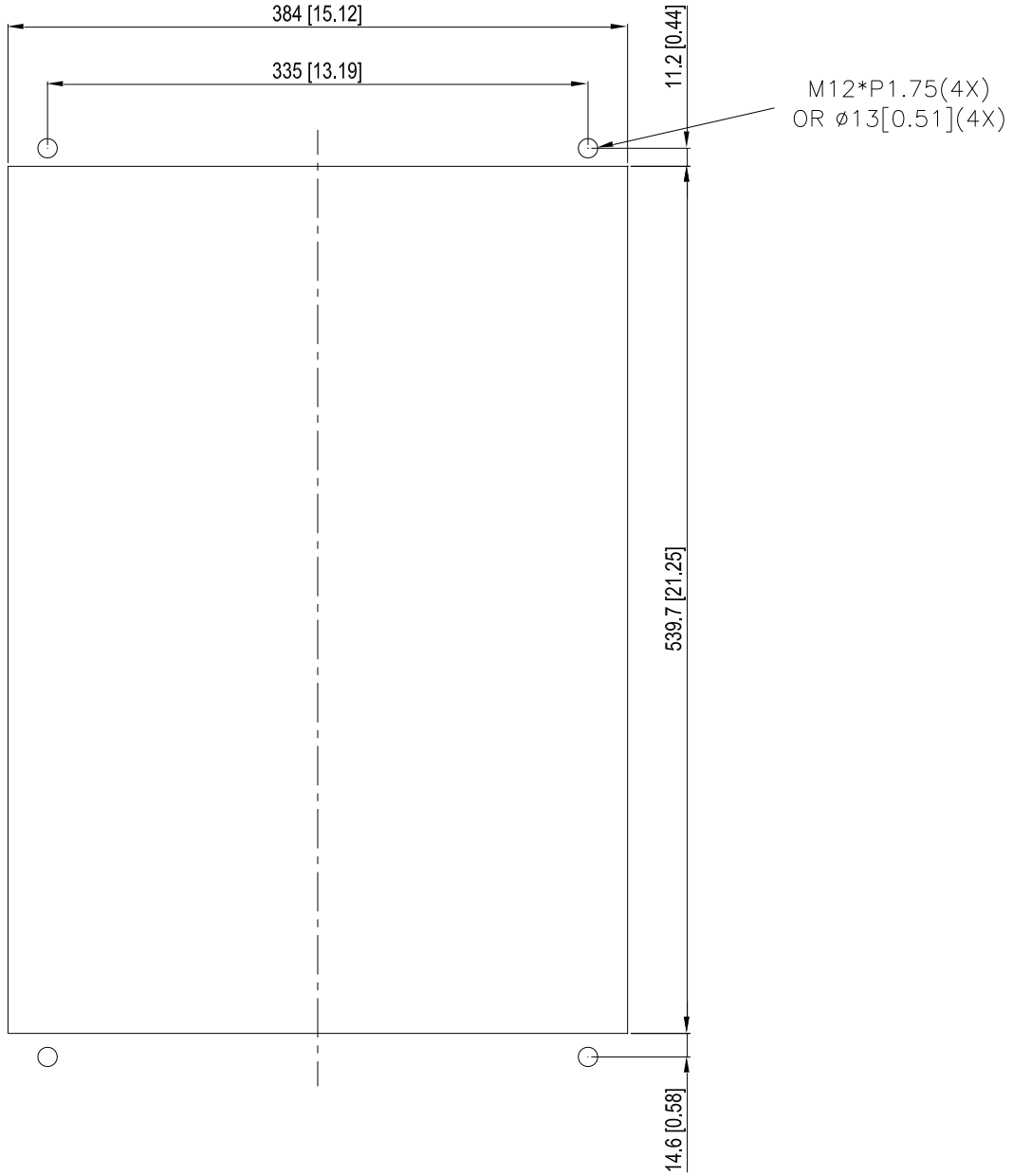

Figure 7-198

Frame D0, D and E Installation

1. Loosen 8 screws and remove Fixture 2 (as shown in the following figure).

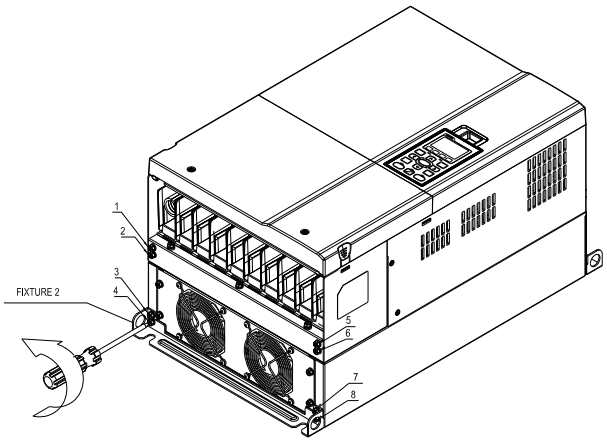

Figure 7-199

2. Loosen 10 screws and remove Fixture 1 (as shown in the following figure). (Loosen 8 screws for Frame D0-3, this frame of models do not have screw 5 and screw 10.)

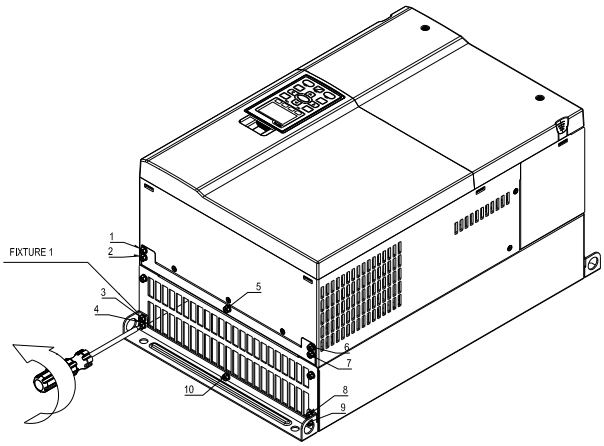

Figure 7-200

3. Fasten 4 screws (as shown in the following figure). Screw torque: 30–32 kg-cm / (26.0–27.8 Ib-in) / (2.9–3.1 Nm)

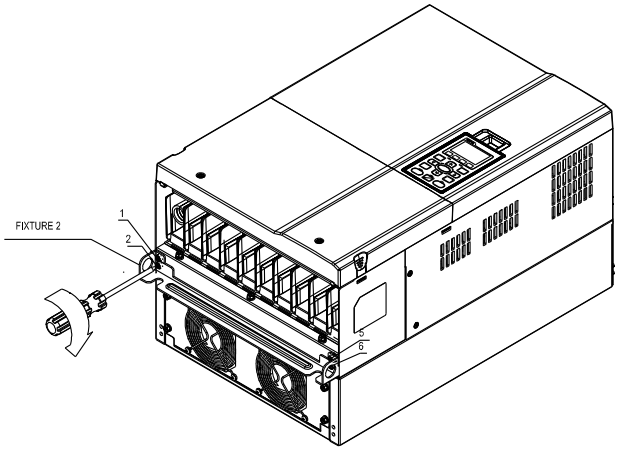

Figure 7-201

4. Fasten 5 screws (as shown in the following figure). Screw torque: 30–32 kg-cm / (26.0–27.8 Ib-in) / (2.9–3.1 Nm) (Fasten 4 screws for Frame D0-3, this frame of models do not have screw 3.)

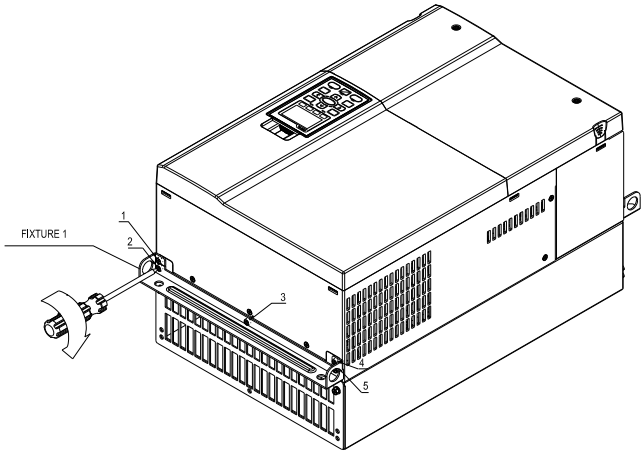

Figure 7-202

5. Fasten 4 screws (as shown in the following figure). Screw torque: 24–26 kg-cm / (20.8–22.6 Ib-in) / (2.4–2.5 Nm).

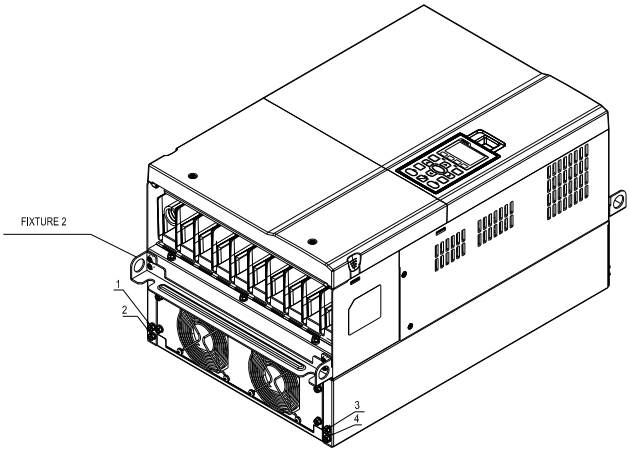

Figure 7-203

6. Fasten 5 screws (as shown in the following figure). Screw torque: 24–26kg-cm / (20.8–22.6 Ib-in) / (2.4–2.5 Nm). (Fasten 4 screws for Frame D0-3, this frame of models do not have screw 3.)

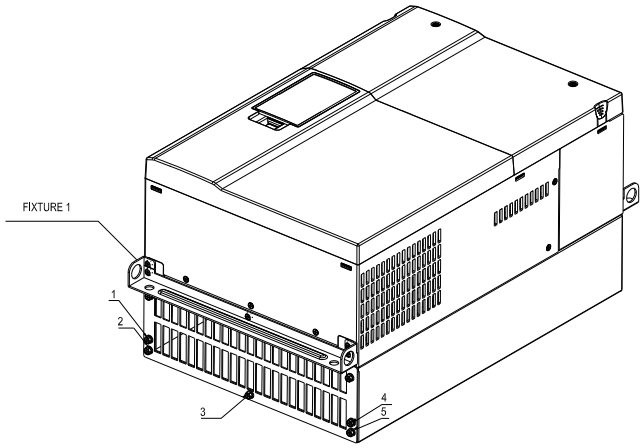

Figure 7-204

7. Place 4 screws (M10) through Fixture 1 & 2 and the plate, then fasten the screws. (as shown in the following figure)
   Frame D0-3: M8*4, Screw torque: 180–200 kg-cm / (156.2–173.6 lb-in.) / (17.7–19.6 Nm)
   Frame D0/D M10*4, Screw torque: 200–240 kg-cm / (173.6–208.3 lb-in.) / (19.6–23.5 Nm)
   Frame E M12*4, Screw torque: 300–400 kg-cm / (260–347 lb-in.) / (29.4–39.2 Nm)

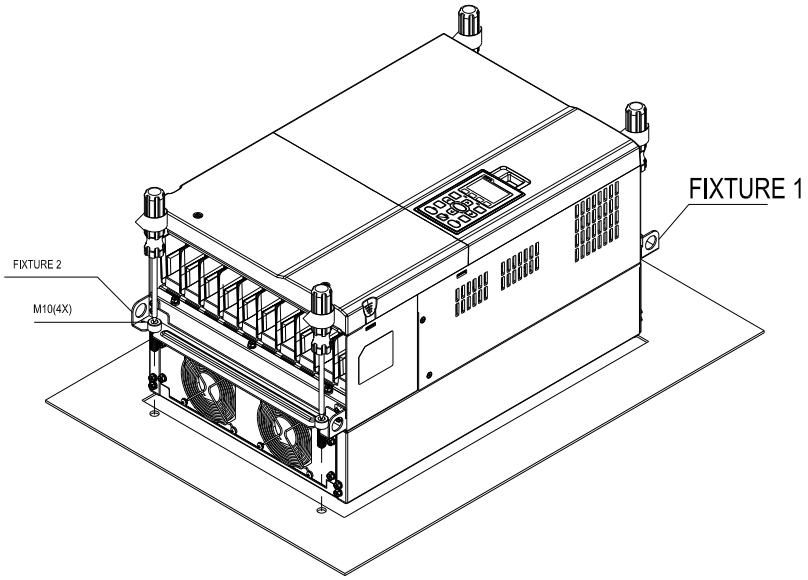

Figure 7-205

Frame F

Applicable model

VFD900CH23A-00; VFD900CH23A-21; VFD1320CH43A-00; VFD1320CH43A-21; VFD1600CH43A-00; VFD1600CH43A-21

Cutout dimension Unit: mm (inch)

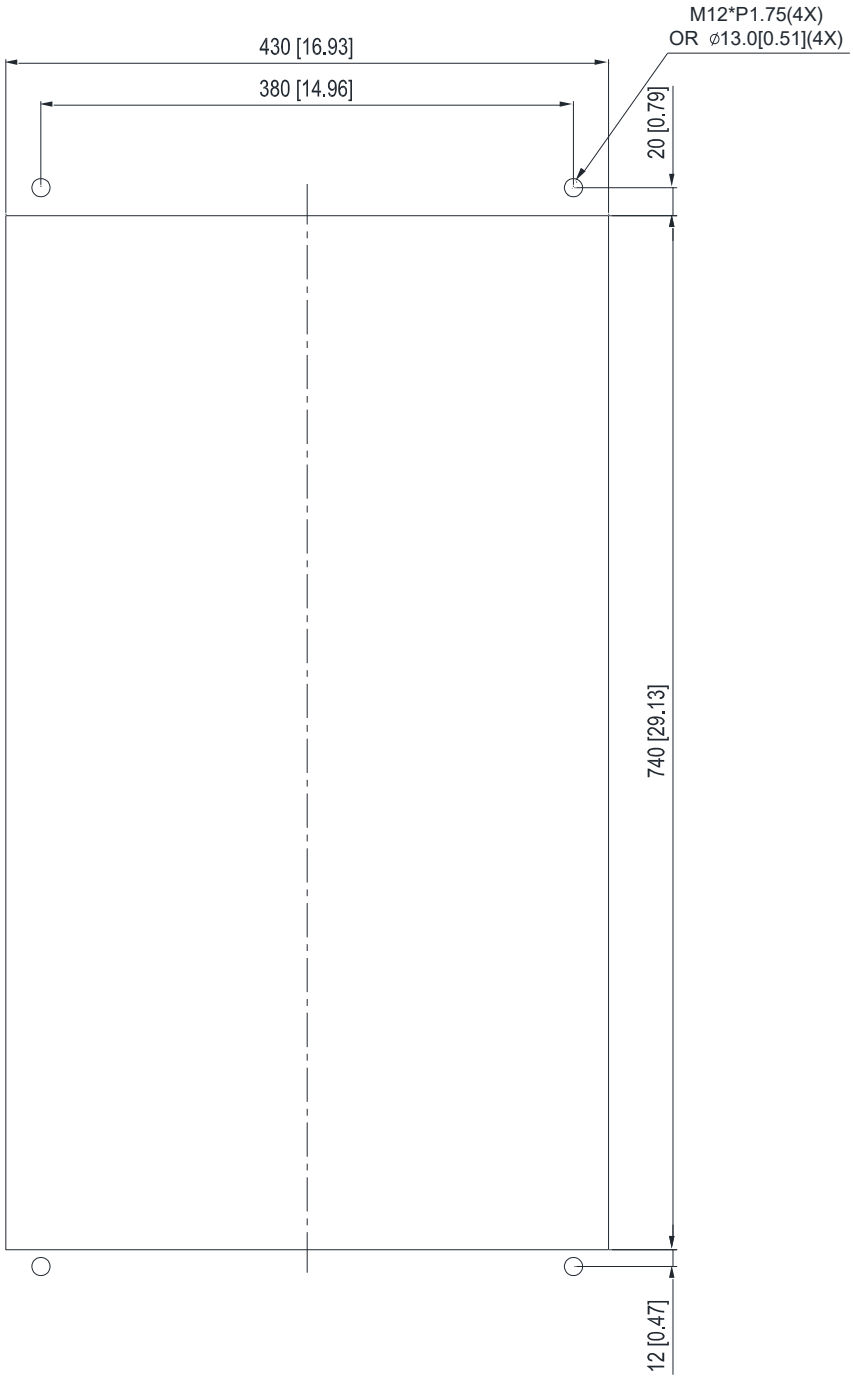

Figure 7-206

Frame F Installation

1. Loosen 12 screws and remove Fixture 2 (as shown in the figure below).

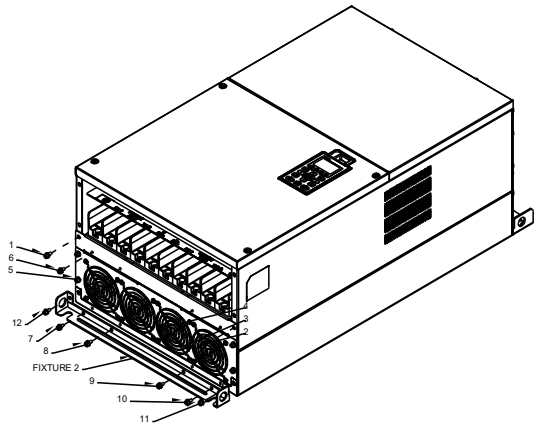

Figure 7-207

2. Loosen 12 screws and remove Fixture 2 (as shown in the figure below).
Screw torque: 24–26 kg-cm / (20.8–22.6 Ib-in.) / (2.4–2.5 Nm).

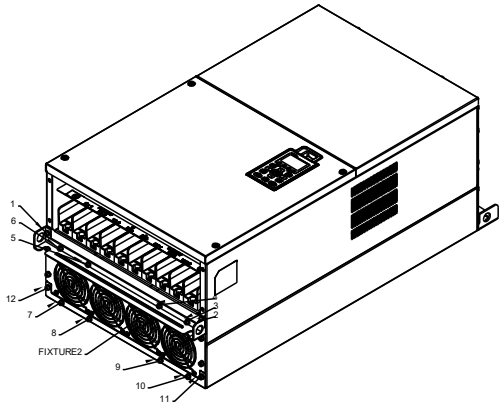

Figure 7-208

3. Loosen screw 13–26 and remove Fixture 1 (as shown in the figure below).

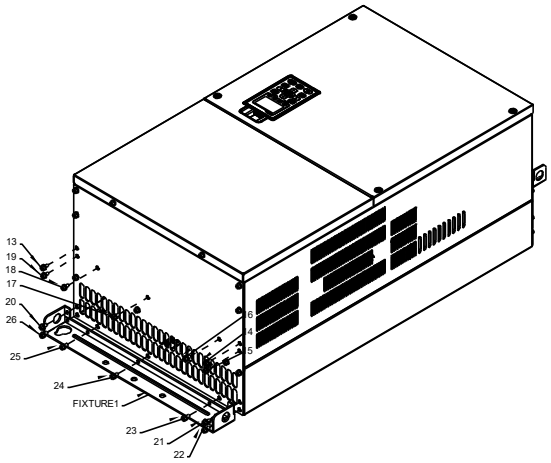

Figure 7-209

4. Install Fixture 1 by fasten screw 13–26 (as shown in the figure below).
Screw torque: 24–26 kg-cm / (20.8–22.6 Ib-in) / (2.4–2.5 Nm).

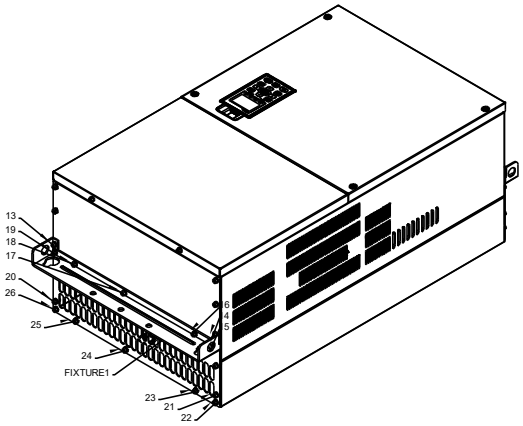

Figure 7-210

5. Place 4 of the M12 screws through Fixture 1 & 2 and plate then fasten the screws.
Screw torque: 300–400 kg-cm / (260–347 Ib-in.) / (29.4–39.2 Nm).

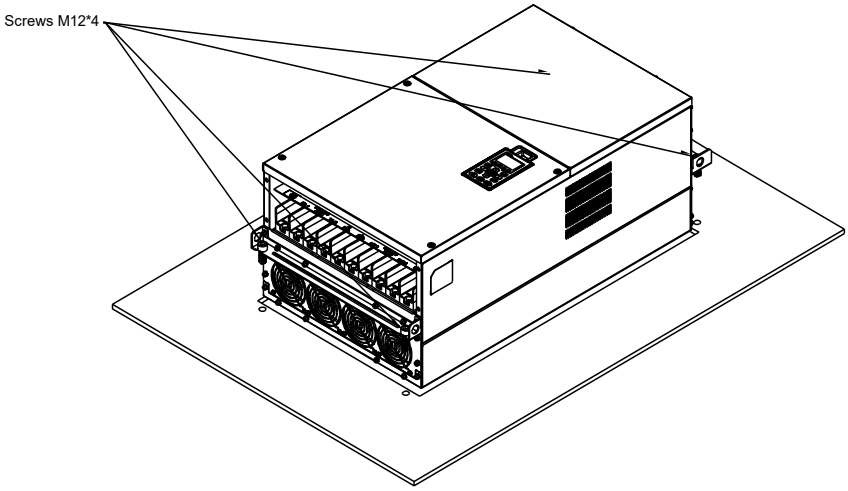

Figure 7-211

7-11 Power Terminal Kit

"MKC-PTCG"

Applicable model

VFD1600CH43A-00; VFD1850CH43A-00; VFD2200CH43A-00

(The MKC-PTCG is optional for the above model, after the installation, the 12 pulse is 6 pulse.)

Accessories

Item	Description	Q'ty
1	Copper Assy.	3
1.1	Copper	3
1.2	Screw M12*25L	6
1.3	Spring	6
1.4	Washer	6
1.5	Nuts	6

Table 7-71

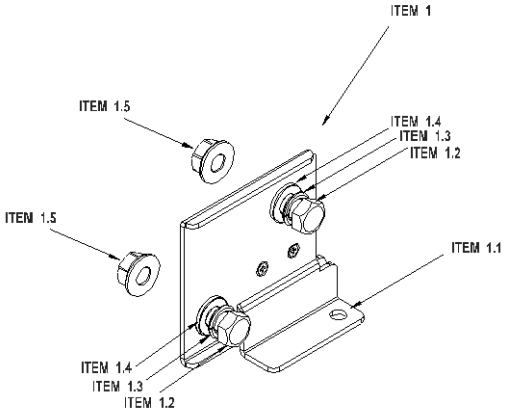

Figure 7-212

Diagram of power terminal connection

M12 Torque: 408 kg-cm / (354.1 lb-in) / (39.98 Nm)

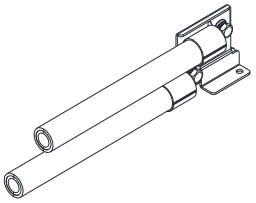

Figure 7-213

"MKC-PTCG" Installation

1. Loosen the 4 screws on the cover, as shown in the following figure.

   Screw Torque: 12–15 kg-cm / (10.4–13 lb-in) / (1.2–1.5 Nm)

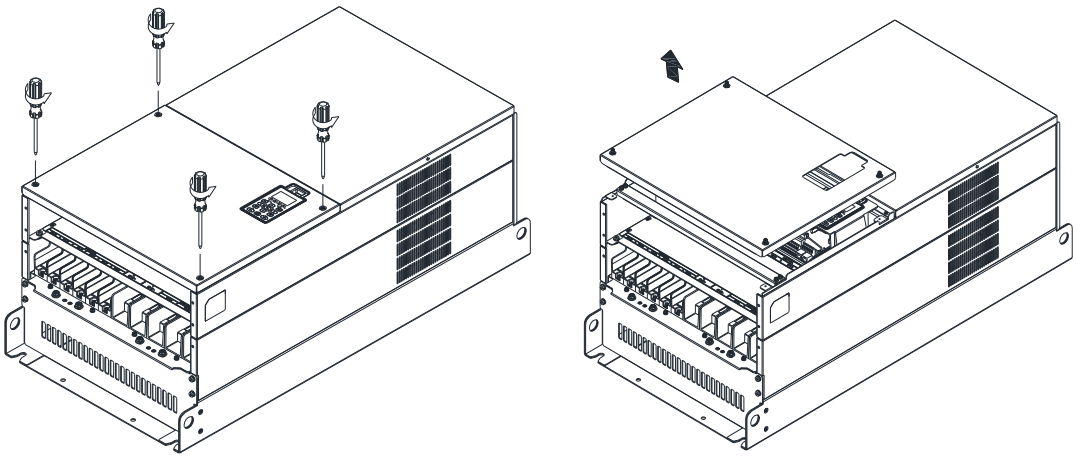

Figure 7-214

2. Remove the 5 screws from the FR4 board, as shown in the following figure. (The FR4 board is not needed after the installation of the power terminal kit). Screw Torque: 12–15 kg-cm / (10.4–13 lb-in) / (1.2–1.5 Nm)

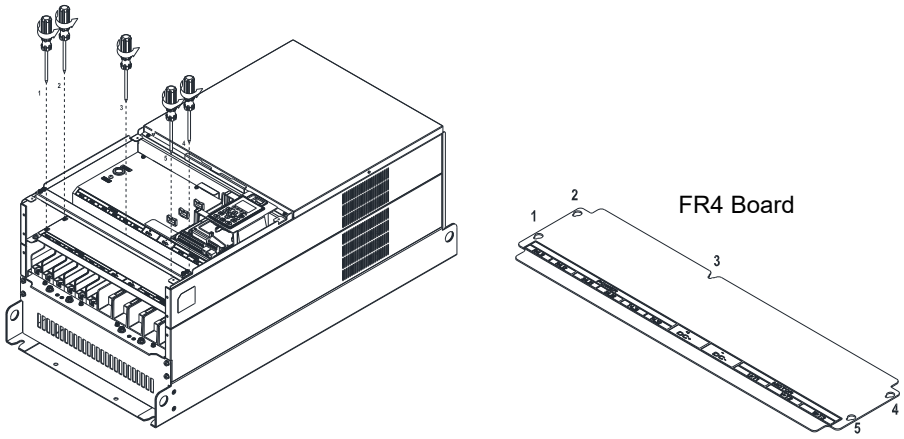

Figure 7-215

3. Loosen the upper M8 nuts (1–6) with a sleeve wrench (12 mm of the sleeve).
M8 Torque: 90 kg / (78.1 lb-in) / (8.8 Nm)

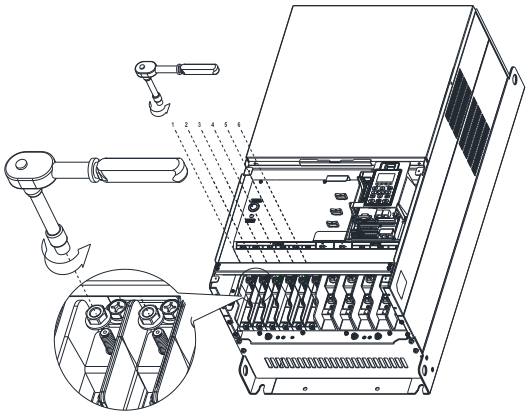

Figure 7-216

4. Install the 3pcs copper assy., as shown in the Figure 7-217. Fasten the upper M8 nuts (1–6) with a sleeve wrench (12 mm of the sleeve), as shown in the Figure 7-218 and Figure 7-219 below.

M8 Torque: 180 kg-cm / (156.2 lb-in) / (17.65 Nm)

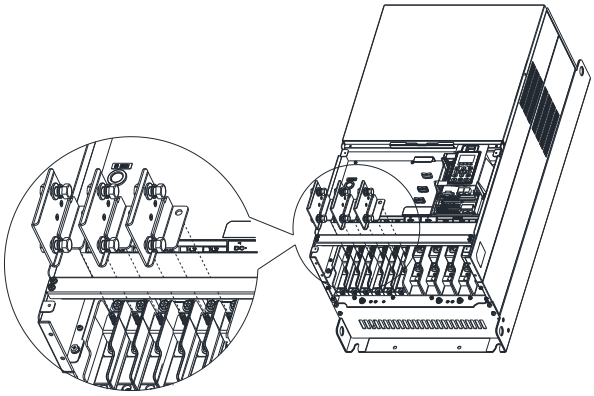

Figure 7-217

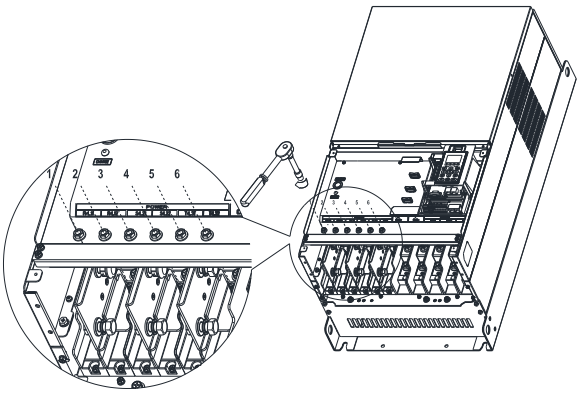

Figure 7-218

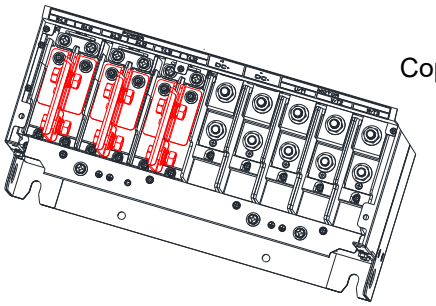

Copper Assy. Installation complete

Figure 7-219

5. Put the cover back and fasten the screws as shown in the figure below.

   Screw Torque: 12–15 kg-cm / (10.4–13 lb-in) / (1.2–1.5 Nm)

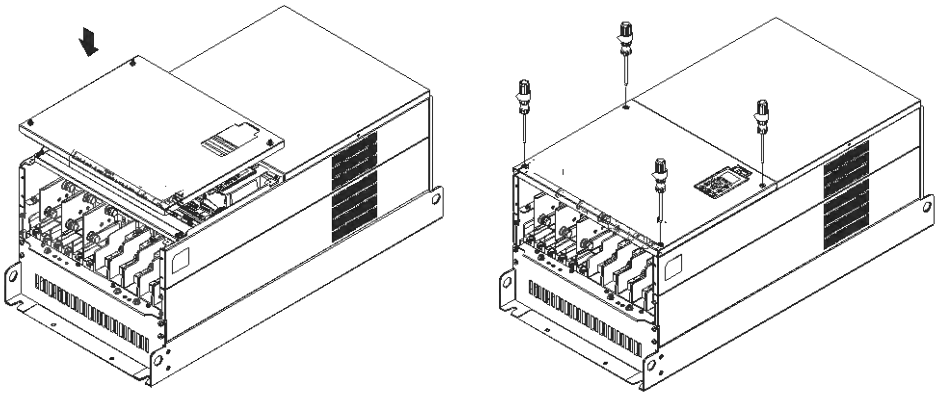

Figure 7-220

7-12 USB / RS-485 Communication Interface IFD6530

Warning

✓ *Thoroughly read this instruction sheet before installation and putting it into use.*

✓ *The content of this instruction sheet and the driver file may be revised without prior notice. Consult our distributors or download the most updated instruction/driver version at http://www.delta.com.tw/product/em/control/cm/control_cm_main.asp*

Introduction

IFD6530 is a convenient RS-485-to-USB converter, which does not require external power-supply and complex setting process. It supports baud rate from 75 to 115.2 Kbps and auto switching direction of data transmission. In addition, it adopts RJ45 in RS-485 connector for users to wire conveniently. And its tiny dimension, handy use of plug-and-play and hot-swap provide more conveniences for connecting all DELTA IABG products to your PC.

Applicable Models: All DELTA IABG products.

- Application & Dimension

Figure 7-221

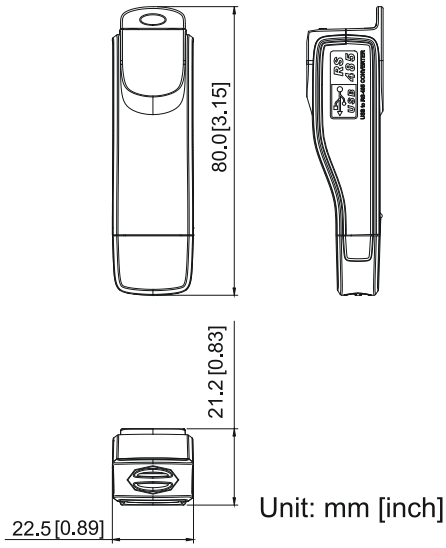

Figure 7-222

Specifications

Power supply	No external power is needed
Power consumption	1.5 W
Isolated voltage	2,500 V_{DC}
Baud rate	75 Kbps, 150 Kbps, 300 Kbps, 600 Kbps, 1,200 Kbps, 2,400 Kbps, 4,800 Kbps, 9,600 Kbps, 19,200 Kbps, 38,400 Kbps, 57,600 Kbps, 115,200 Kbps
RS-485 connector	RJ45
USB connector	A type (plug)
Compatibility	Full compliance with USB V2.0 specification
Max. cable length	RS-485 Communication Port: 100 m
Support RS-485 half-duplex transmission	

Table 7-72

■ **RJ-45**

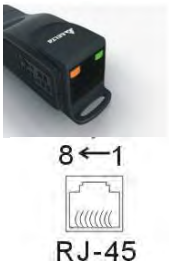

PIN	Description
1	Reserved
2	Reserved
3	GND
4	SG-

PIN	Description
5	SG+
6	GND
7	Reserved
8	+9V

Preparations before Driver Installation

Extract the driver file (IFD6530_Drivers.exe) by following steps. You could find driver file (IFD6530_Drivers.exe) in the CD supplied with IFD6530.

NOTE: DO NOT connect IFD6530 to PC before extracting the driver file.

STEP 1

STEP 2

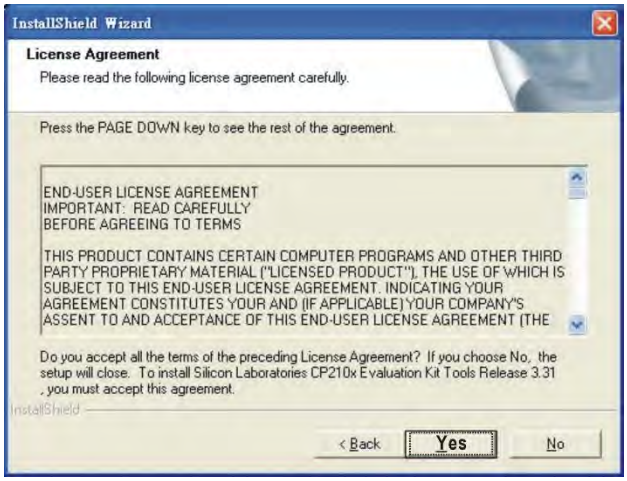

STEP 3

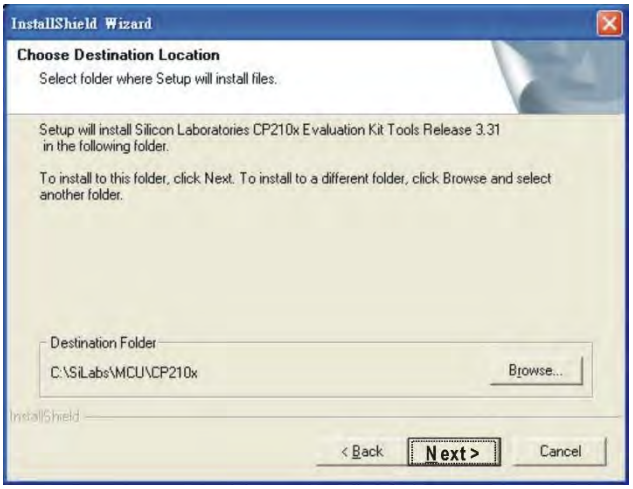

STEP 4

STEP 5

You should have a folder marked SiLabs under drive C. c:\ SiLabs

Driver Installation

After connecting IFD6530 to PC, install the driver by following steps.

STEP 1

STEP 2

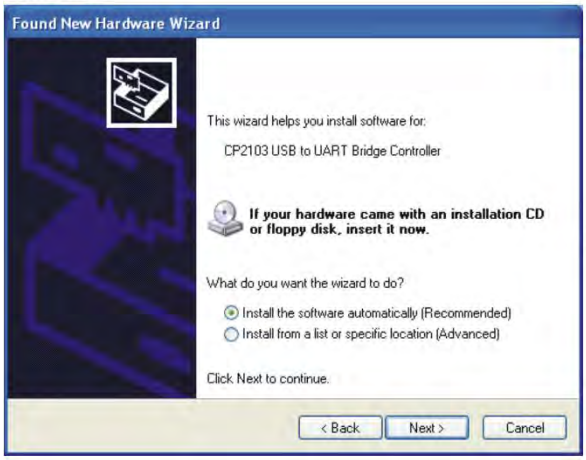

OR

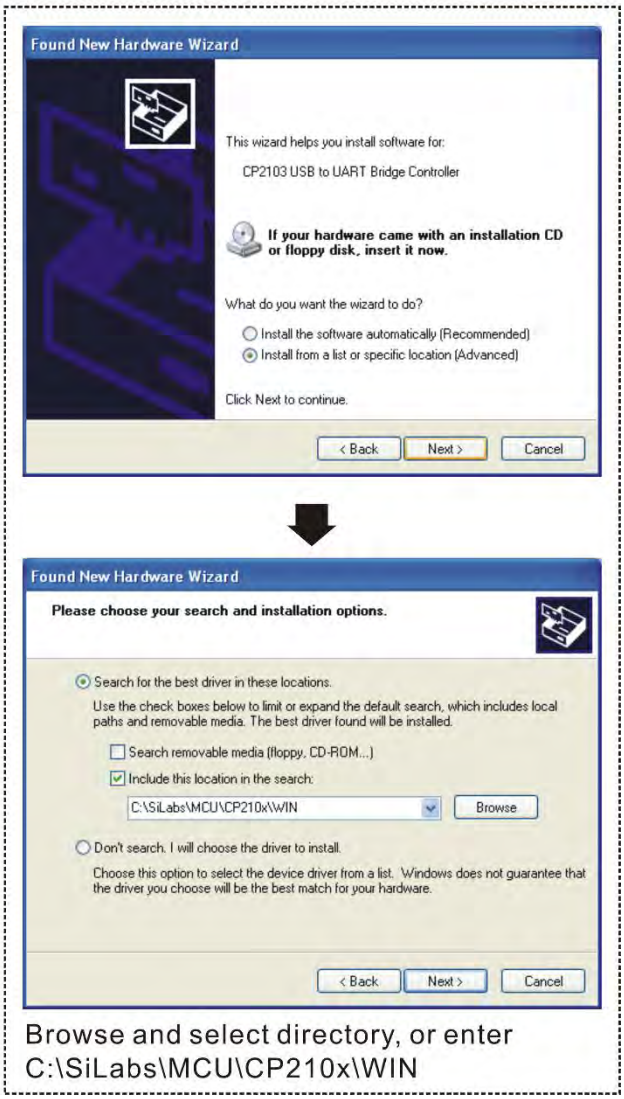

Browse and select directory, or enter C:\SiLabs\MCU\CP210x\WIN

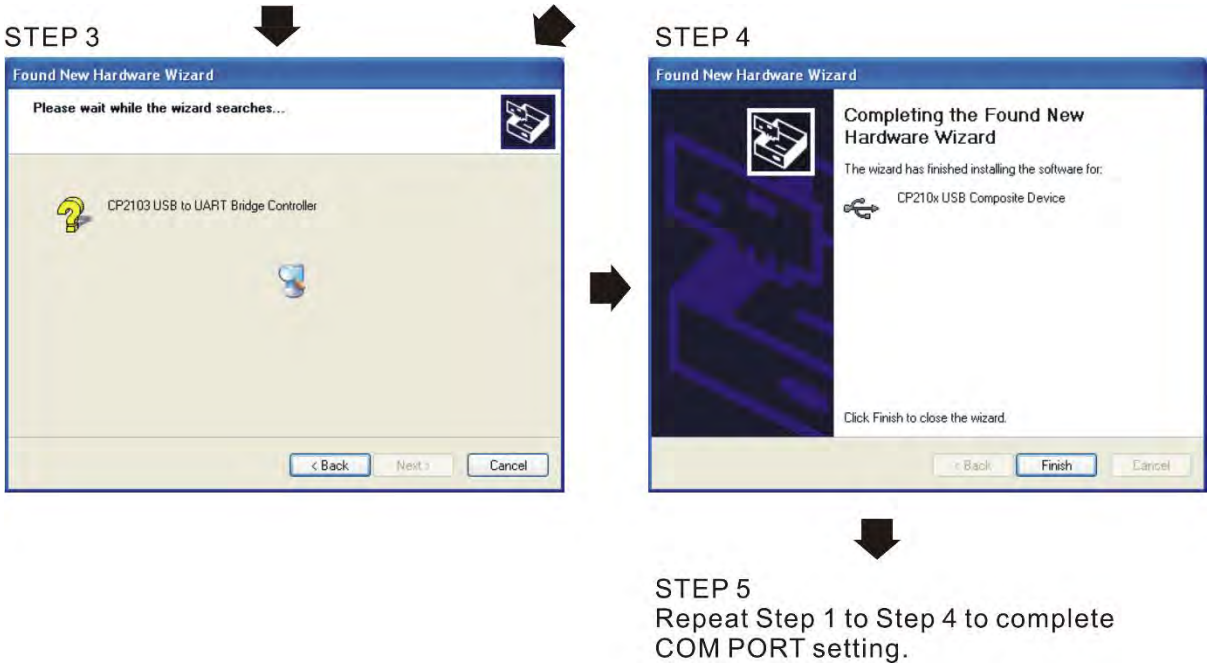

1. LED Display

1. Steady Green LED ON: power is ON.
2. Blinking orange LED: data is transmitting.

Chapter 8 Option Cards

8-1 Option Card Installation

8-2 EMC-D42A -- Extension card for 4-point digital input / 2-point digital input

8-3 EMC-D611A -- Extension card for 6-point digital input (110 VAC input voltage)

8-4 EMC-R6AA -- Relay output extension card (6-point N.O. output contact)

8-5 EMC-BPS01 -- +24V power card

8-6 EMC-A22A -- Extension card for 2-point analog input / 2-point analog output

8-7 EMC-PG01L / EMC-PG02L -- PG card (Line Driver)

8-8 EMC-PG01O / EMC-PG02O -- PG card (Open collector)

8-9 EMC-PG01U / EMC-PG02U -- PG card (ABZ Incremental encoder signal/ UVW Hall position signal input)

8-10 EMC-PG01R -- PG card (Resolver)

8-11 EMC-PG01H – PG card (Resolver)

8-12 EMC-MC01 -- Motion control card

8-13 CMC-PD01 -- Communication card, PROFIBUS DP

8-14 CMC-DN01 -- Communication card, DeviceNet

8-15 CMC-EIP01 / CMC-EIP01 -- Communication card, EtherNet/IP

8-16 CMC-EC01 -- Communication card, EtherCAT

8-17 CMC-PN01 -- Communication card, PROFINET

8-18 EMC-COP01 -- Communication card, CANopen

8-19 Delta Standard Fieldbus Cables

- The option cards in this chapter are optional accessories. Select the applicable option cards for your motor drive, or contact your local distributor for suggestion. The option cards can significantly improve the efficiency of the motor drive.
- To prevent damage to the motor drive during installation, remove the digital keypad and the cover before wiring.
- The option cards do not support hot swapping. Power off the motor drive before you install or remove the option cards.

8-1 Option Card Installation

8-1-1 Remove covers

Frame A–C

Screw Torque: 8–10 kg-cm / (6.9–8.7 lb-in.) / (0.8–1.0 Nm)

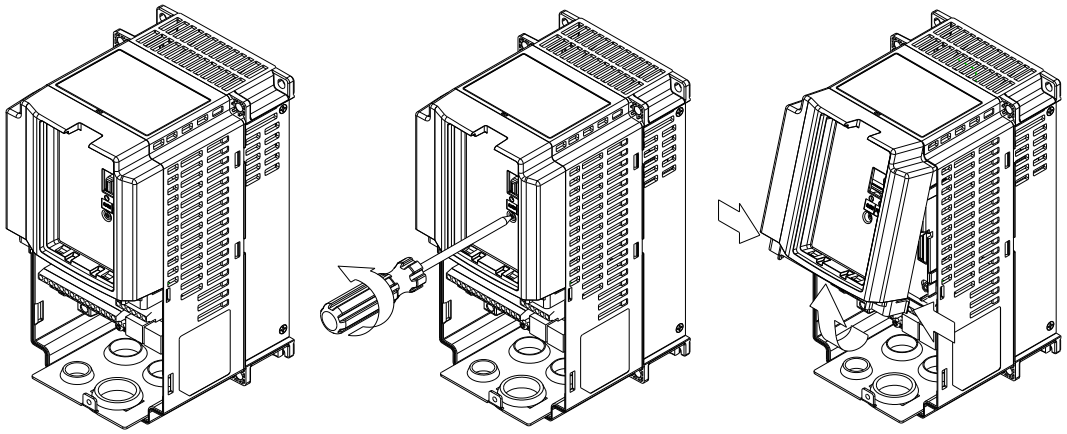

Figure 8-1

Frame D0

Screw Torque: 8–10 kg-cm / (6.9–8.7 lb-in.) / (0.8–1.0 Nm)

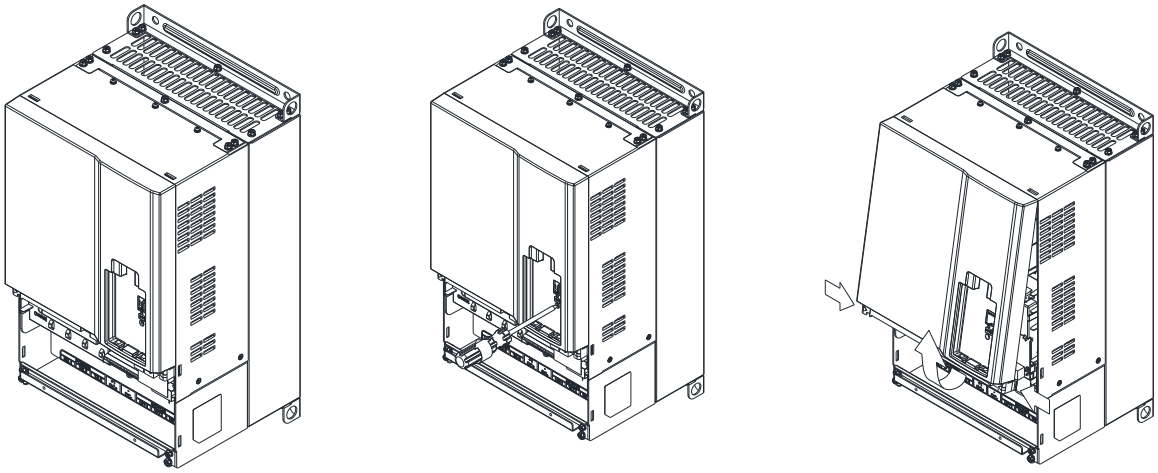

Figure 8-2

Frame D0-3

Screw Torque: 12–15 kg-cm / (10.4–13 lb-in.) / (1.2–1.5 Nm)

NOTE: When you put back the cover, insert the two clips onto the slots on the top of the drive, then rotate the cover to close it.

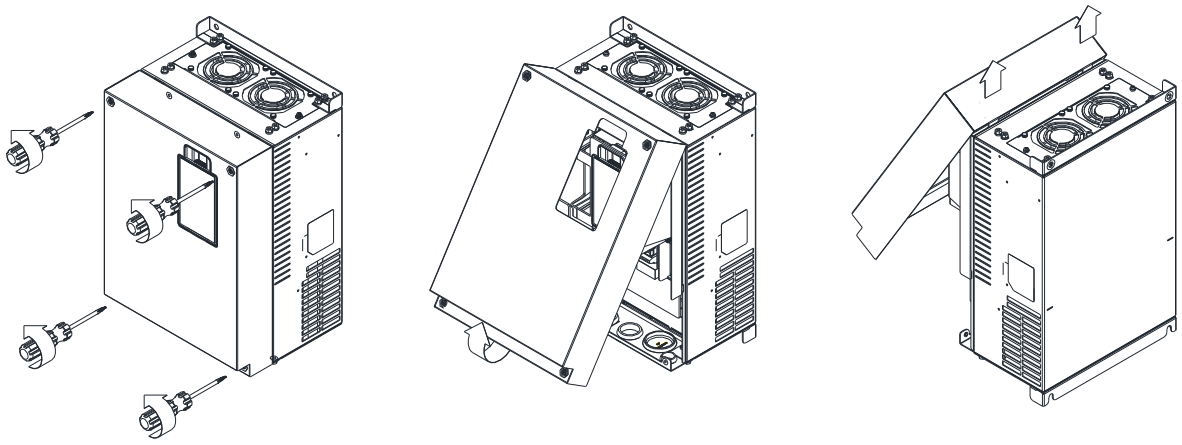

Figure 8-3

Frame D

Screw Torque: 8–10 kg-cm / (6.9–8.7 lb-in.) / (0.8–1.0 Nm)

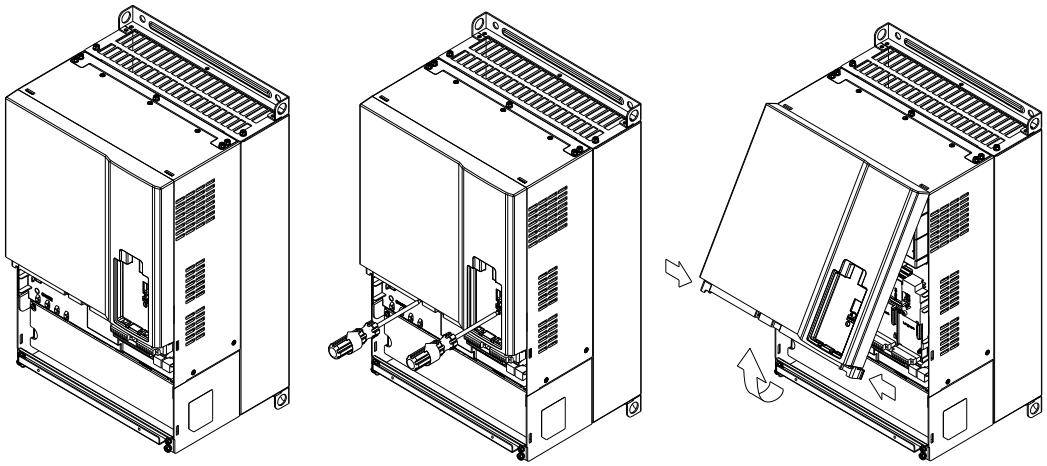

Figure 8-4

Frame E

Screw Torque: 12–15 kg-cm / (10.4–13 lb-in.) / (1.2–1.5 Nm)

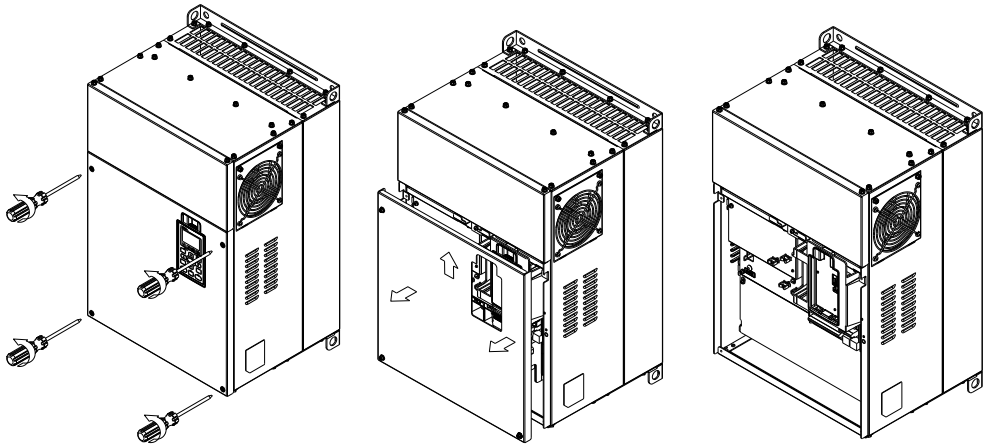

Figure 8-5

Frame F

Screw Torque: 12–15 kg-cm / (10.4–13 lb-in.) / (1.2–1.5 Nm)

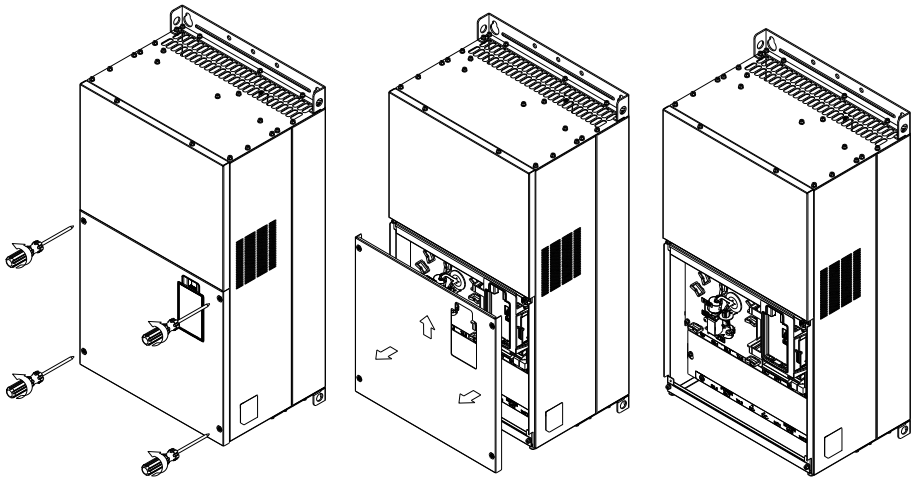

Figure 8-6

Frame G

Screw Torque: 12–15 kg-cm / (10.4–13 lb-in.) / (1.2–1.5 Nm)

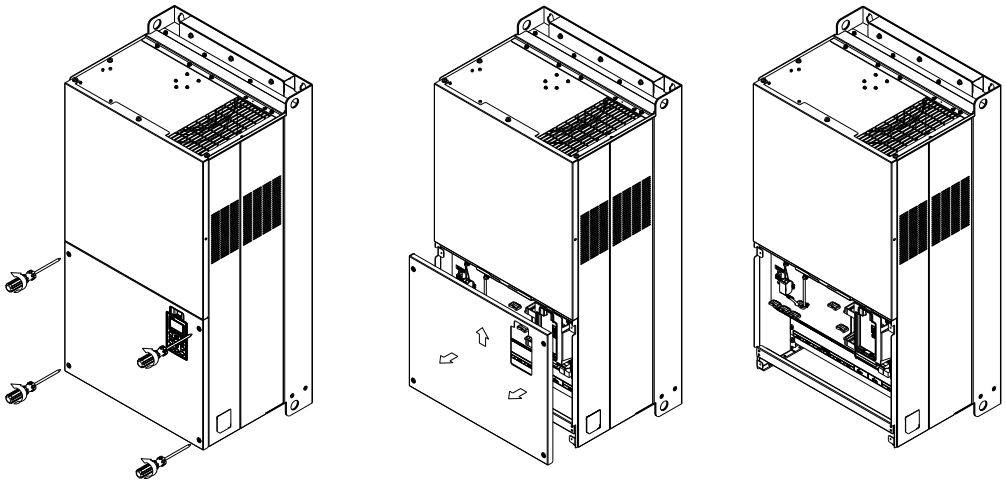

Figure 8-7

Frame H

Screw Torque: 14–16 kg-cm / (12.15–13.89 lb-in.) / (1.4–1.6 Nm)

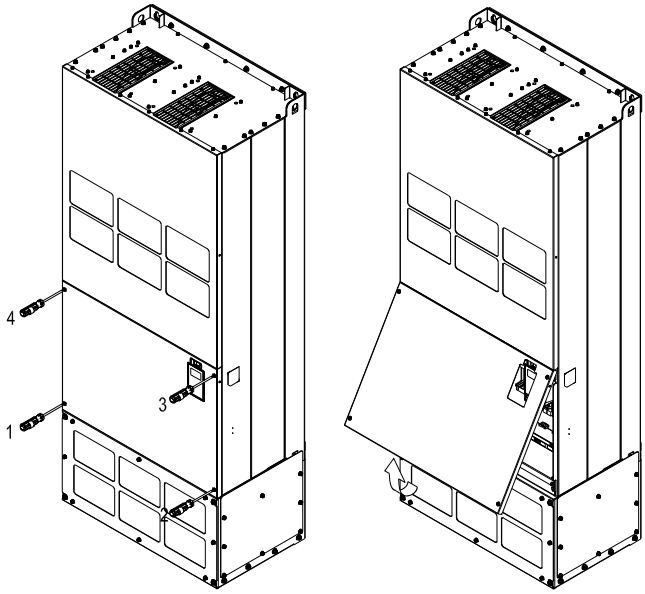

Figure 8-8

8-1-2 Option Card Installation

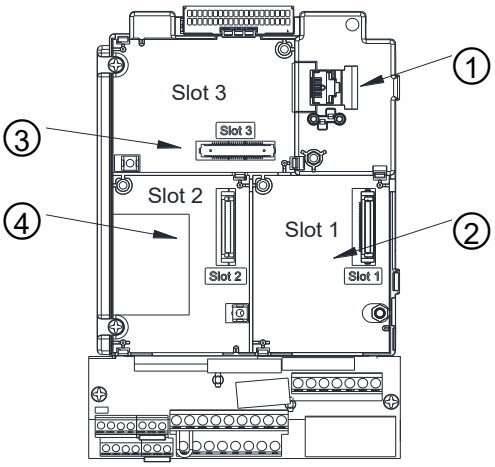

Figure 8-9

1	RJ45 (Socket) for digital keypad KPC-CC01 ☑ Refer to Chapter 10 Digital Keypad for more details on KPC-CC01. ☑ Refer to Chapter 10 Digital Keypad for more details on optional accessory RJ45 extension cable.
2	Communication extension card (Slot 1) CMC-PD01; CMC-DN01; CMC-EIP01; EMC-COP01; CMC-EC01; CMC-PN01
3	I/O & Relay extension card (Slot 3) EMC-D42A; EMC-D611A; EMC-A22A; EMC-R6AA; EMC-BPS01
4	PG Card (Slot 2) EMC-PG01L; EMC-PG02L; EMC-PG01O; EMC-PG02O; EMC-PG01U; EMC-PG02U; EMC-PG01R; EMC-PG01H; EMC-MC01

Screws specification for option card terminals:

EMC-D42A; EMC-D611A; EMC-BPS01	Wire Gauge	0.2–0.5 mm^2 (26–20 AWG)
	Torque	5 kg-cm / (4.4 lb-in.) / (0.5 Nm)
EMC-R6AA	Wire Gauge	0.2–0.5 mm^2 (26–20 AWG)
	Torque	8 kg-cm / (7 lb-in.) / (0.8 Nm)
EMC-PG01L; EMC-PG02L; EMC-PG01O; EMC-PG02O; EMC-PG01U; EMC-PG02U; EMC-PG01R; EMC-PG01H; EMC-MC01	Wire Gauge	0.2–0.5 mm^2 (26–20 AWG)
	Torque	2 kg-cm / (1.73 lb-in.) / (0.2 Nm)

I/O & Relay Extension Card (Slot 3)

EMC-D42A

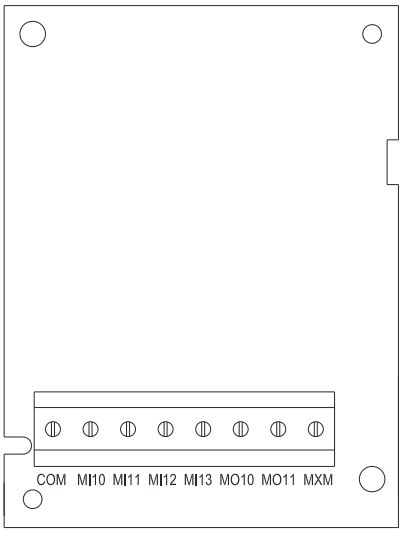

Figure 8-10

EMC-R6AA

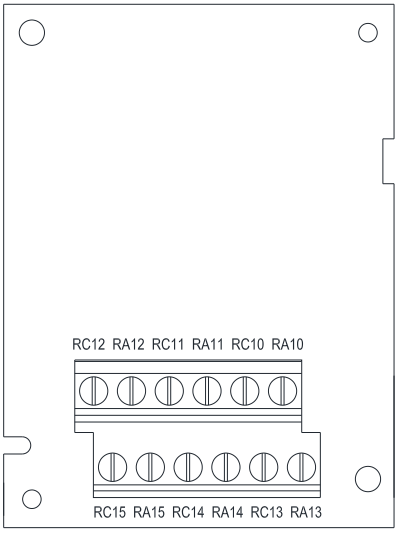

Figure 8-11

EMC-BPS01

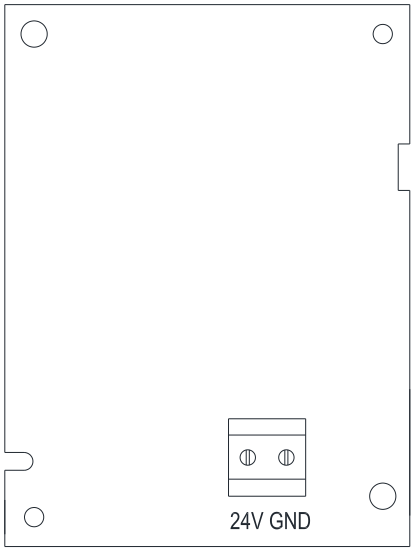

Figure 8-12

EMC-D611A

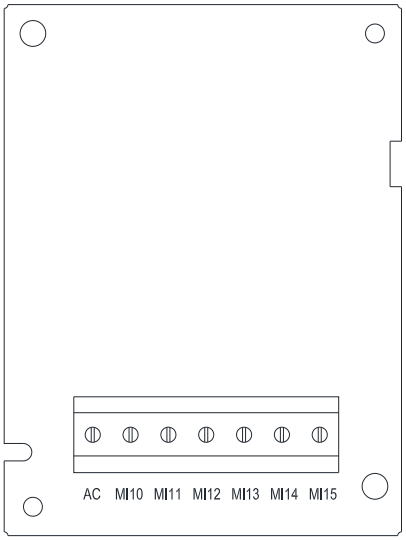

Figure 8-13

EMC-A22A

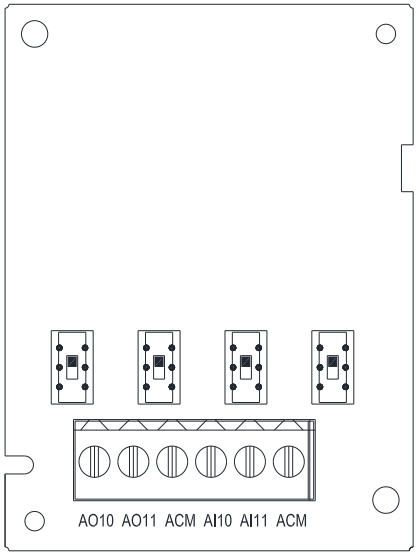

Figure 8-14

PG Card (Slot 2)

EMC-PG01O / EMC-PG02O

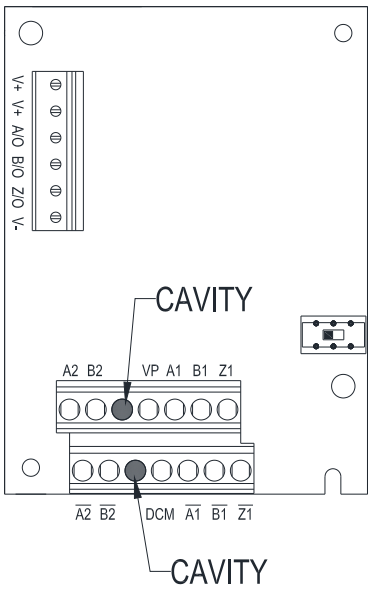

Figure 8-15

EMC-PG01L/ EMC-PG02L

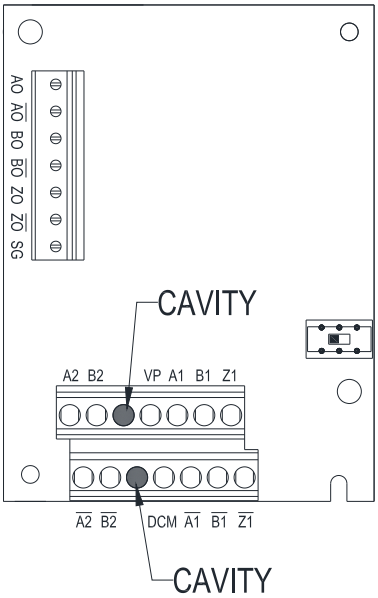

Figure 8-16

EMC-PG01U/ EMC-PG02U

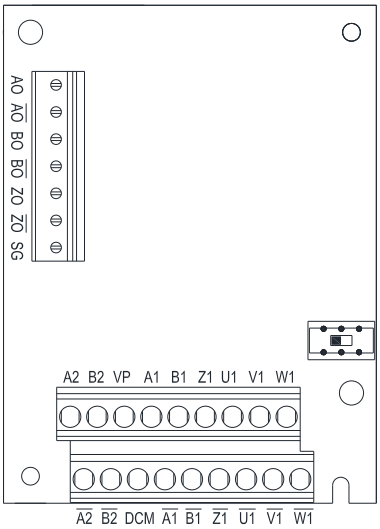

Figure 8-17

EMC-PG01R

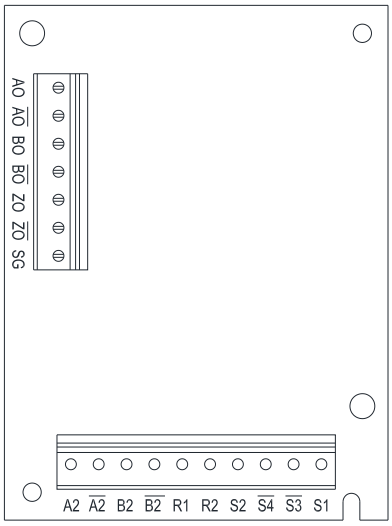

Figure 8-18

EMC-PG01H

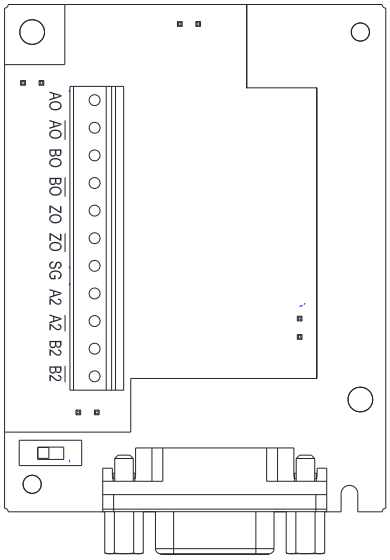

Figure 8-19

EMC-MC01

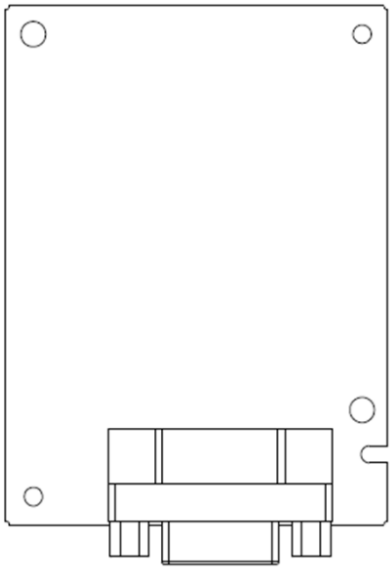

Figure 8-20

Communication Extension Card (Slot 1)

CMC-PD01

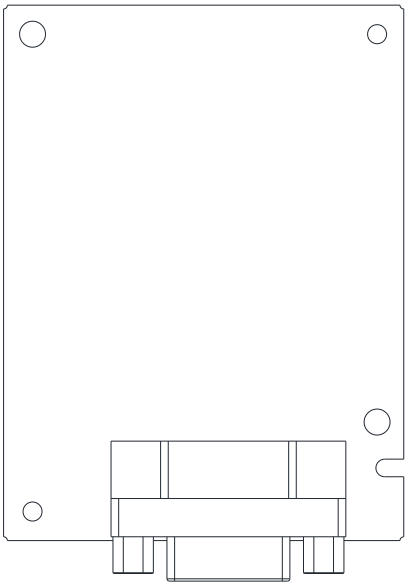

Figure 8-21

CMC-DN01

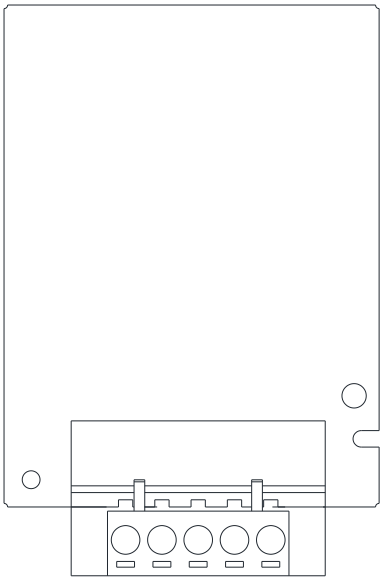

Figure 8-22

CMC-EIP01

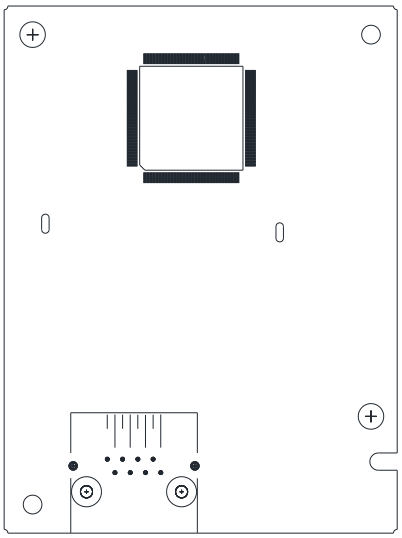

Figure 8-23

EMC-COP01

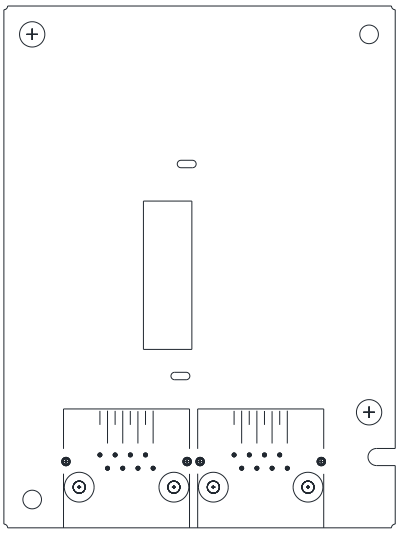

Figure 8-24

CMC-EC01

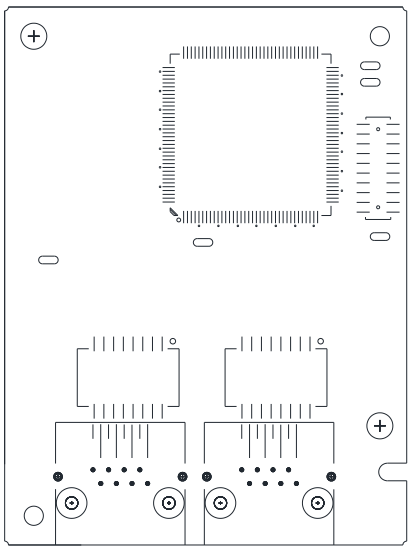

Figure 8-25

CMC-PN01

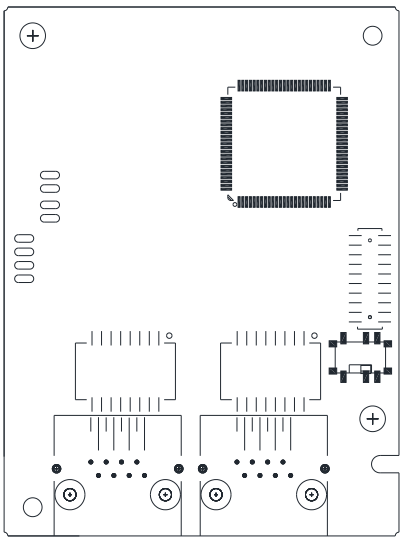

Figure 8-26

8-1-3 Installation and Disconnection of Extension Card

8-1-3-1 Installation

Communication Card: EMC-COP01, CMC-EIP01, CMC-DN01, CMC-PD01, CMC-EC01, CMC-PN01

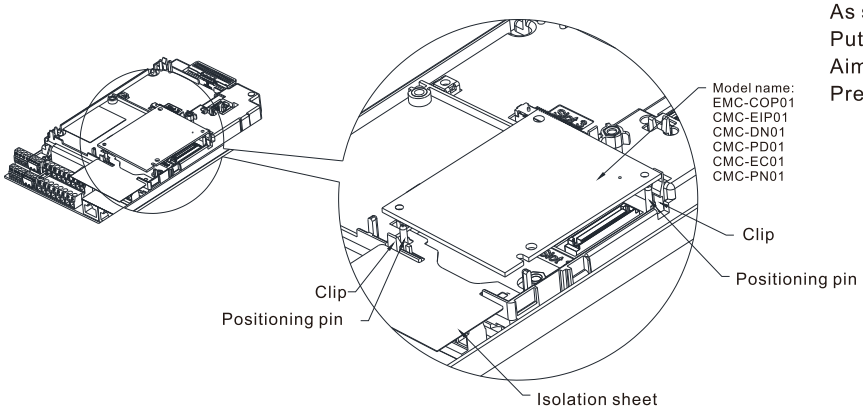

As shown in the figure on the left.
Put the isolation sheet into the positioning pin.
Aim the two holes at the positioning pin.
Press the pin to clip the holes with the PCB.

Figure 8-27

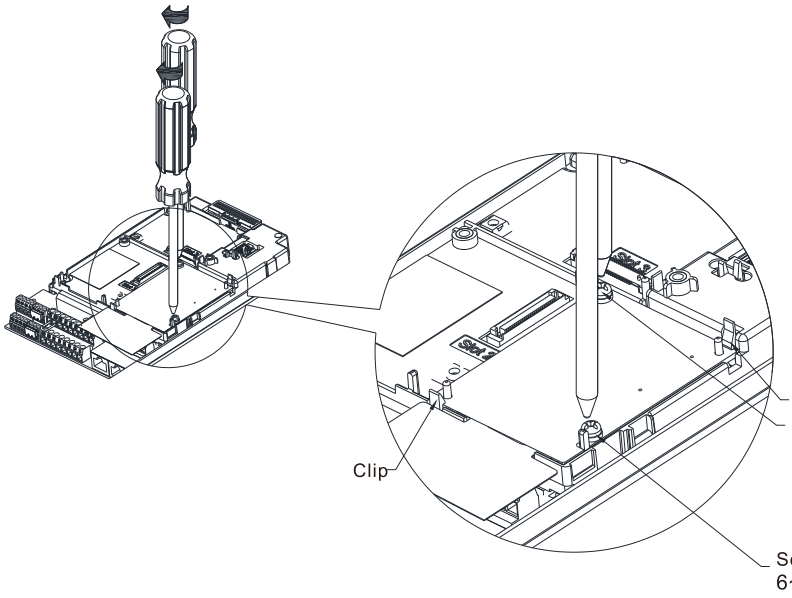

As shown in the figure on the left.
Fasten the screws after the PCB is clipped with the holes.

Figure 8-28

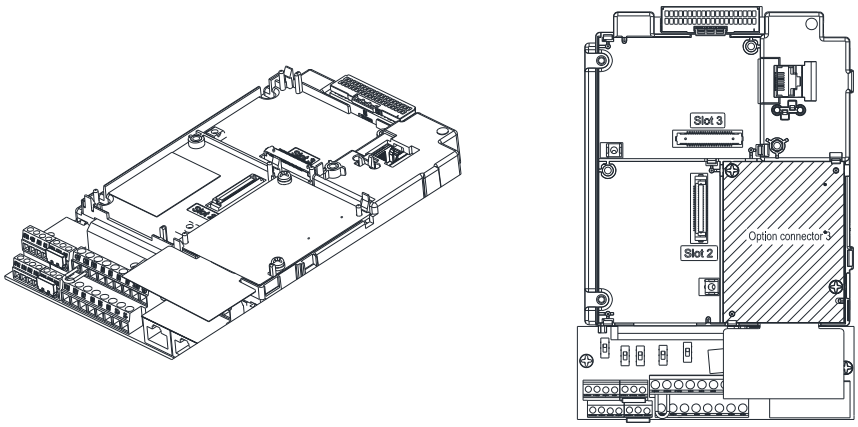

As shown in the figure on the left, installation is completed.

Figure 8-29

I/O & Relay Card: EMC-D42A, EMC-D611A, EMC-R6AA, EMC-BPS01, EMC-A22A

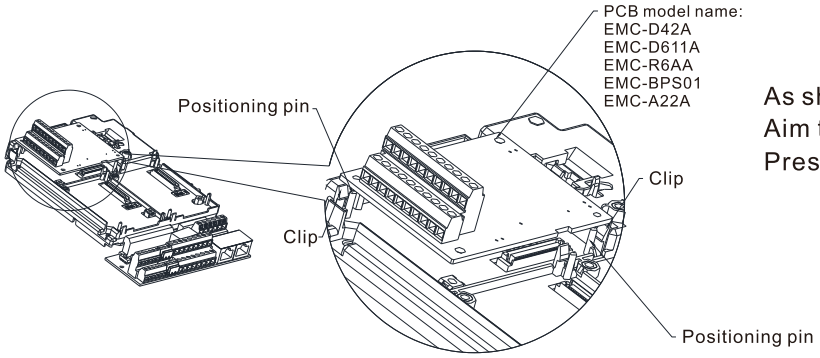

As shown in the figure on the left.
Aim the two holes at the positioning pin.
Press the pin to clip the holes with the PCB.

Figure 8-30

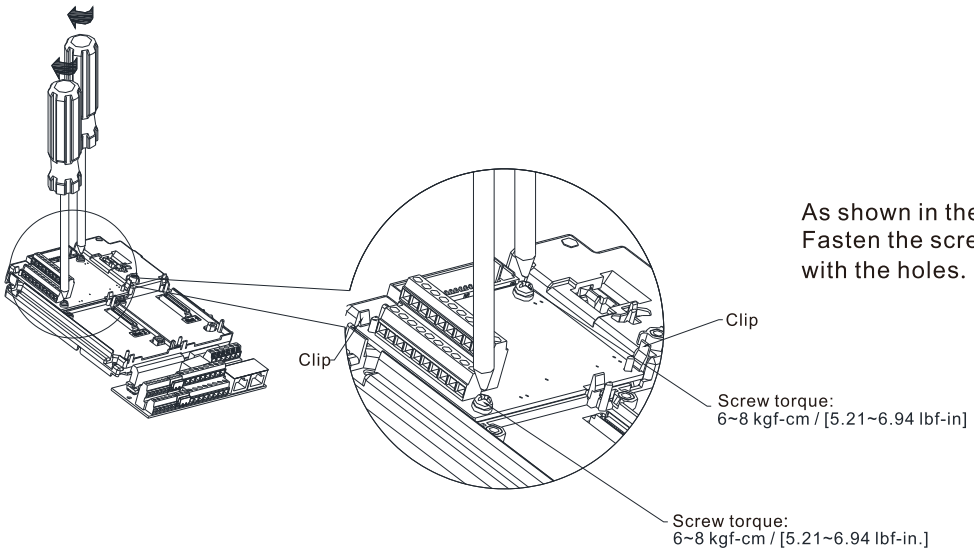

As shown in the figure on the left.
Fasten the screws after the PCB is clipped with the holes.

Figure 8-31

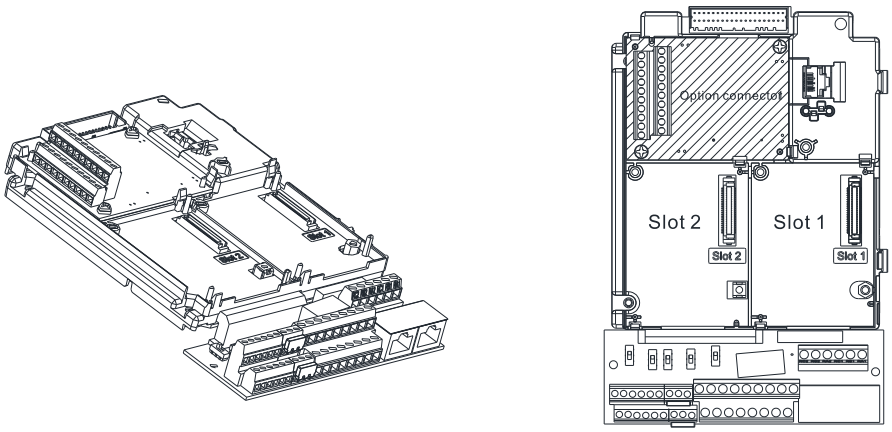

As shown in the figure on the left, installation is completed.

Figure 8-32

PG Card: EMC-PG01O / EMC-PG02O, EMC-PG01L / EMC-PG02L, EMC-PG01U / EMC-PG02U, EMC-PG01R, EMC-PG01H, EMC-MC01

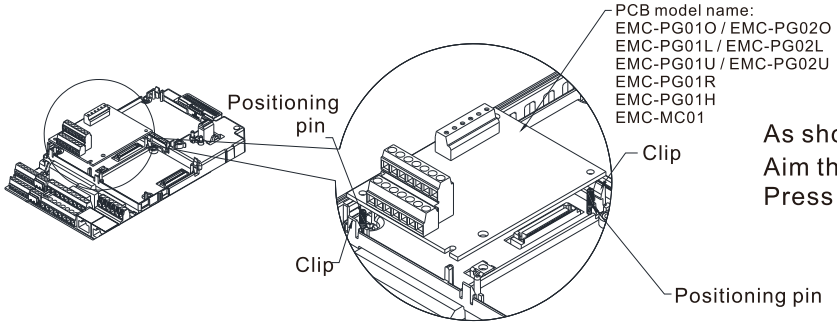

As shown in the figure on the left.
Aim the two holes at the positioning pin.
Press the pin to clip the holes with the PCB.

Figure 8-33

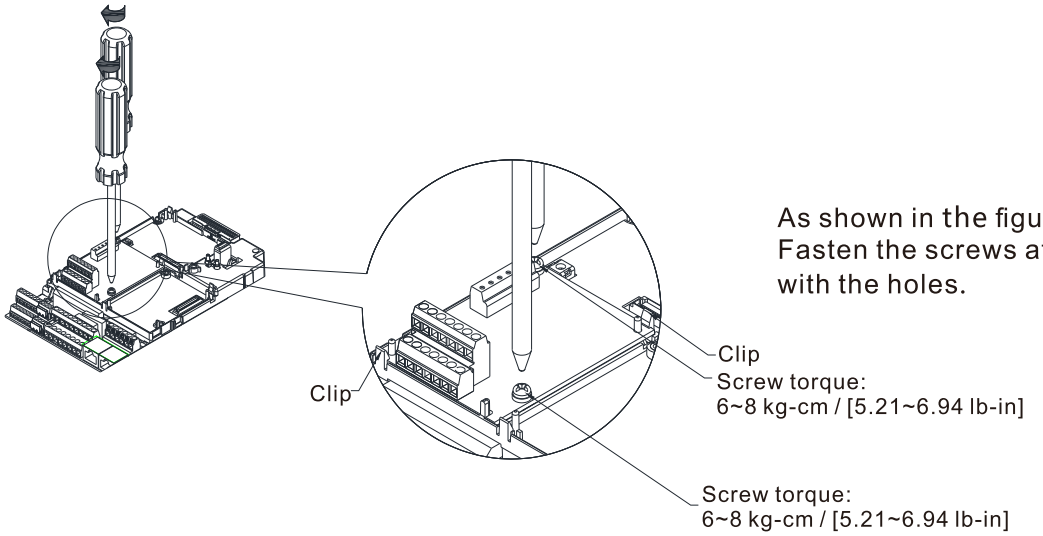

As shown in the figure on the left.
Fasten the screws after PCB is clipped with the holes.

Figure 8-34

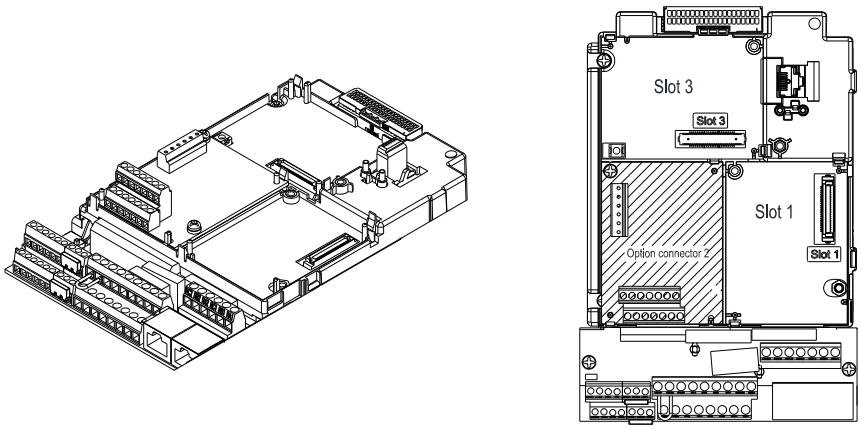

As shown in the figure on the left, installation is completed.

Figure 8-35

8-1-3-2 Disconnecting the Extension Card

Communication card: EMC-COP01, CMC-EIP01, CMC-DN01, CMC-PD01, CMC-EC01, CMC-PN01

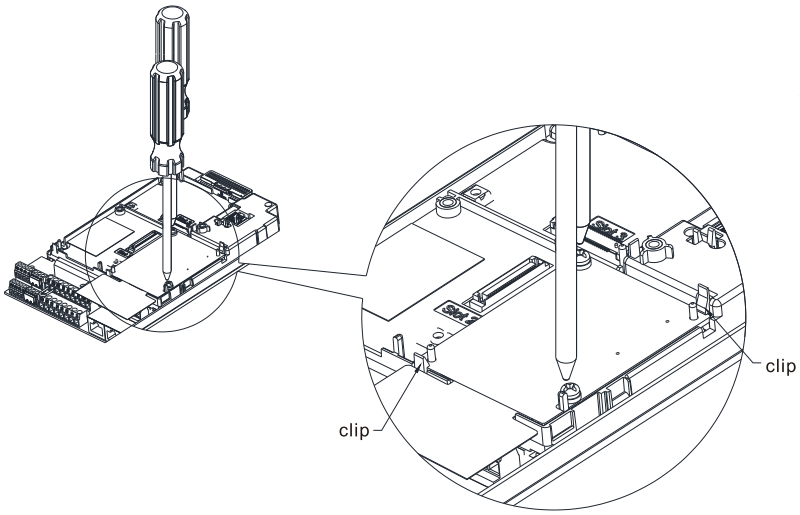

Remove the two screws as shown in the figure on the left.

Figure 8-36

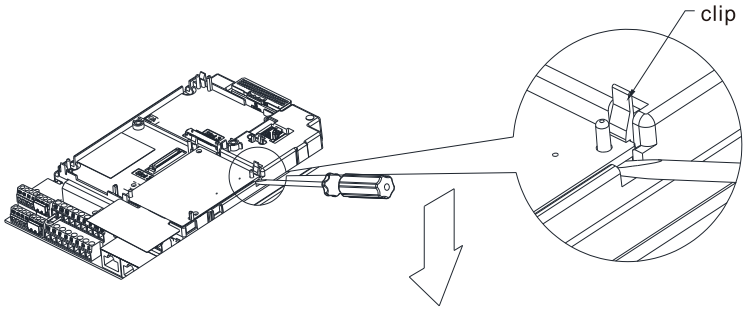

As shown in the figure on the left.
Twist to open the clip.
Insert a slot type screwdriver into the hollow to prize the PCB off the clip.

Figure 8-37

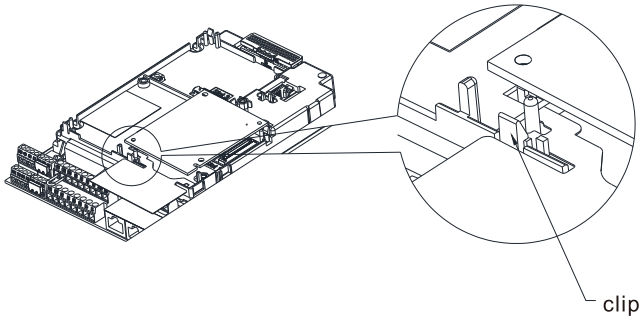

As shown in the figure on the left.
Twist to open the other clip to remove the PCB.

Figure 8-38

I/O & Relay Card: EMC-D42A, EMC-D611A, EMC-R6AA, EMC-BPS01, EMC-A22A

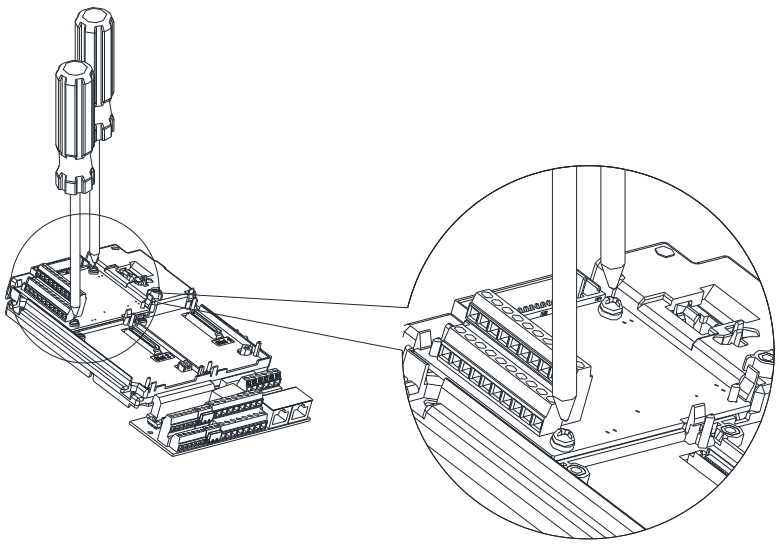

Remove the two screws as shown in the figure on the left.

Figure 8-39

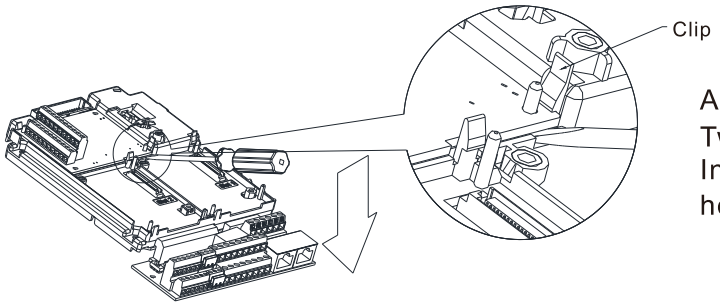

As shown in the figure on the left.
Twist to open the clip.
Insert a slot type screwdriver into the hollow to prize the PCB off the clip.

Figure 8-40

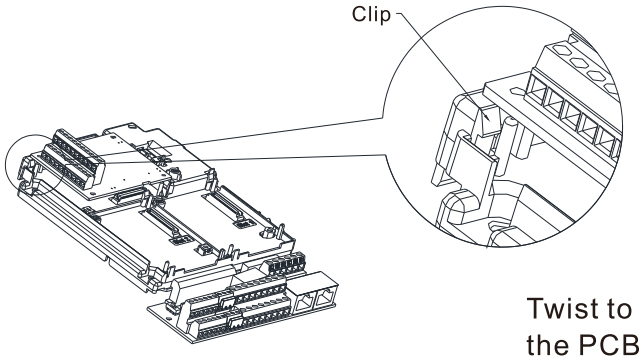

Twist to open the other clip to remove the PCB, as shown in the figure on the left.

Figure 8-41

PG Card: EMC-PG01O / EMC-PG02O, EMC-PG01L / EMC-PG02L, EMC-PG01U / EMC-PG02U, EMC-PG01R, EMC-PG01H, EMC-MC01

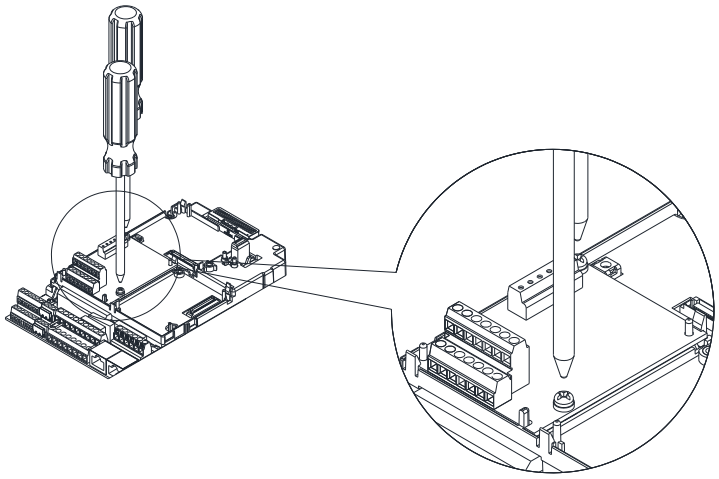

Remove the two screws as shown in the figure on the left.

Figure 8-42

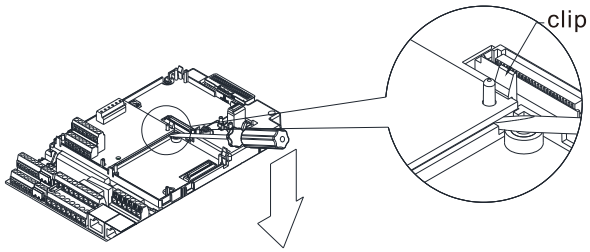

As shown in the figure on the left.
Twist to open the clip.
Insert a slot type screwdriver into the hollow to prize the PCB off the clip.

Figure 8-43

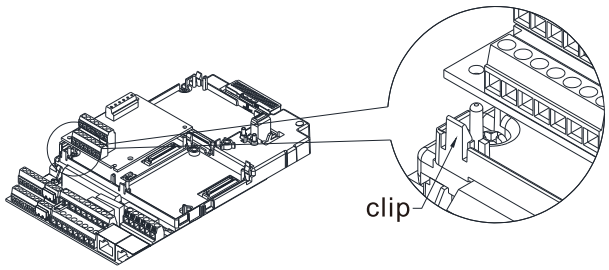

As shown in the figure on the left.
Twist to open the other clip to remove the PCB.

Figure 8-44

8-2 EMC-D42A -- Extension card for 4-point digital input / 2-point digital input

	Terminals	Descriptions
I/O Extension Card	COM	Common for Multi-function input terminals Select SINK (NPN) /SOURCE (PNP) in J1 jumper / external power supply
	MI10–MI13	Refer to Pr.02-26–02-29 to program the multi-function inputs MI10–MI13. Internal power is applied from terminal E24: +24 V_{DC} ± 5% 200 mA, 5 W External power +24 V_{DC}: max. voltage 30 V_{DC}, min. voltage 19 V_{DC}, 30 W ON: the activation current is 6.0 mA OFF: leakage current tolerance is 10μA
	MO10–MO11	Multi-function output terminals (photocoupler) The AC motor drive releases various monitor signals, such as drive in operation, frequency attained and overload indication, via transistor (open collector). 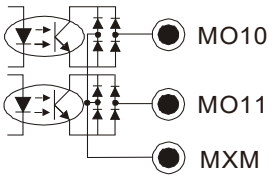 Figure 8-45
	MXM	Common for multi-function output terminals MO10, MO11 (photocoupler) Max 48 V_{DC} 50 mA

8-3 EMC-D611A -- Extension card for 6-point digital input (110 V_{AC} input voltage)

	Terminals	Descriptions
I/O Extension Card	AC	AC power Common for multi-function input terminal (Neutral)
	MI10–MI15	Refer to Pr.02.26–Pr.02.31 for multi-function input selection Input voltage: 100–130 V_{AC} Input frequency: 47–63 Hz Input impedance: 27 kΩ Terminal response time: ON: 10 ms OFF: 20 ms

8-4 EMC-R6AA -- Relay output extension card (6-point N.O. output contact)

	Terminals	Descriptions
Relay Extension Card	R10A–R15A R10C–R15C	Refer to Pr.02.36–Pr.02.41 for multi-function output selection Resistive load: 3 A (N.O.) / 250 V_{AC} 5 A (N.O.) / 30 V_{DC} Inductive load (COS 0.4) 1.2 A (N.O.) / 250 V_{AC} 2.0 A (N.O.) / 30 V_{DC} It is used to output each monitor signal, such as drive is in operation, frequency attained or overload indication.

8-5 EMC-BPS01 -- +24V power card

	Terminals	Descriptions
External Power Supply	24V GND	Input power: 24V±5% Maximum input current:0.5 A **NOTE:** Do not connect drive control terminal GND directly to the EMC-BPS01 input terminal GND.
		Function: When the drive is only powered by EMC-BPS01, the communication can be assured and support all communication cards and following functions: Parameters read and write Keypad can be displayed Keypad button can be operated (except RUN) Analog input is effective Multi-input (FWD, REV, MI1–MI8) needs external power supply to operate Following functions are not supported: Relay output (including extension card), PG card, PLC function

8-6 EMC-A22A -- Extension card for 2-point analog input / 2-point analog output

8-6-1 Product File

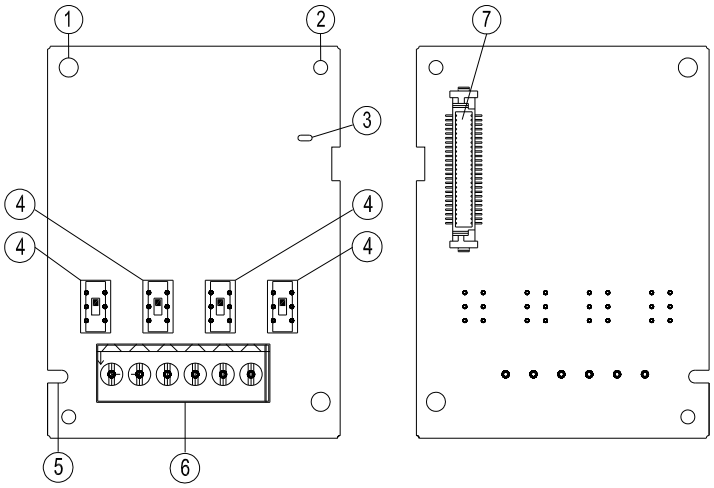

1. Screw fixing hole
2. Positioning hole
3. POWER indicator
4. Function switch
5. Fool-proof groove
6. Terminal block
7. AC motor drive connection port

Figure 8-46

8-6-2 Terminal specifications

	Terminals	Descriptions	
Analog I/O Extension card	AI10, AI11	Refer to Pr.14-00–Pr.14-01 for function selection (input), and Pr.14-18–Pr.14-19 for mode selection. There are two sets of AI port, SSW3 (AI10) and SSW4 (AI11), which can be switched to Voltage or Current mode. Voltage mode: Input 0–10 V Current mode: Input 0–20 mA / 4–20 mA	
		Analog voltage input 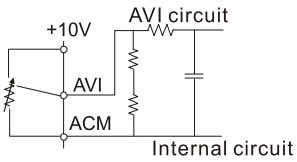 Figure 8-47	Impedance: 20 kΩ Range: 0–10 V = 0–Max. Operation Frequency (Pr.01-00) AI10, AI11 Switch, default is 0–10 V
		Analog current input 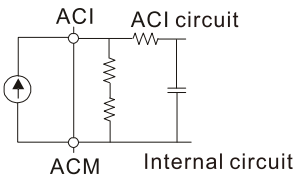 Figure 8-48	Impedance: 250 Ω Range: 0–20 mA / 4–20 mA = 0–Max. Operation Frequency (Pr.01-00) AI10, AI11 Switch, default is 4–20 mA
	AO10, AO11	Refer to Pr.14-12–Pr.14-13 for function selection (output), and Pr.14-36–Pr.14-37 for mode selection. There are two sets of AO port, SSW1 (AO10) and SSW2 (AO11), which can be switched to Voltage or Current mode. Voltage mode: Output 0–10 V Current mode: Output 0–20 mA / 4–20 mA	

		Multi-function analog voltage output 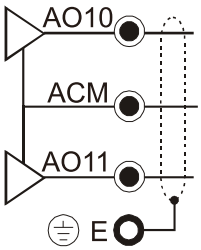 Figure 8-49	AVO: 0–10 V Max. output current 2 mA, Max. load 5 kΩ Output current: 2 mA max Resolution: 0–10 V corresponds to Max. operation frequency Switch: AO10 / AO11 Switch, default is 0–10 V
			ACO: 0–20 mA, Max. load 500 kΩ Output current: 2 mA max Resolution: 0–20 mA / 4–20 mA corresponds to Max. operation frequency Switch: AO10 / AO11 Switch, default is 0–10 V
	ACM	Analog signal common	Common for analog terminals

8-7 EMC-PG01L / EMC-PG02L -- PG card (Line Driver)

8-7-1 Terminal description

Set by Pr.10-00–10-02, Pr.10-16–10-18

Terminals		Descriptions
PG1	VP	Output voltage for power: +5 V / +12 V±5% (use FSW3 to switch +5 V / +12 V) Max. output current: 200 mA
	DCM	Common for power and signal
	A1, /A1, B1, /B1, Z1, /Z1	Encoder input signal (Line Driver or Open Collector) Open Collector input voltage: +5 – +24V (Note 1) It can be single-phase or two-phase input. EMC-PG01L: Max. input frequency: 300 kHz EMC-PG02L: Max. input frequency: 30 kHz(Note 2)
PG2	A2, /A2, B2, /B2	Pulse Input signal (Line Driver or Open Collector) Open Collector input voltage: +5 – +24V (Note1) It can be single-phase or two-phase input. EMC-PG01L: Max. input frequency: 300 kHz EMC-PG02L: Max. input frequency: 30 kHz(Note 2)
PG OUT	AO, /AO, BO, /BO, ZO, /ZO, SG,	PG Card Output signals. It has division frequency function: 1–255 times Max. output voltage for Line driver: 5 V_{DC} Max. output current: 50 mA EMC-PG01L Max. output frequency: 300 kHz EMC-PG02L Max. output frequency: 30 kHz SG is the GND of PG card. It is also the GND of position machine or PLC to make the output signal to be the common pivot point.

NOTE:

1. Open Collector application, input current 5–15 mA to each set then each set needs one pull-up resistor. If input voltage of open collector is 24V, the power of encoder needs to be connected externally. Refer to diagram 2 of PG1.

5V	Recommended pull-up resistor: above 100–220 Ω, 1/2W
12V	Recommended pull-up resistor: above 510–1.35 kΩ, 1/2W
24V	Recommended pull-up resistor, above 1.8k–3.3 kΩ, 1/2W

2. If the required bandwidth is not over 30 kHz at the application, it is recommended to use EMC-PG02O/L (bandwidth 30 kHz) to avoid interference.

PG1 card wiring diagram (the image 1 and 2 below are wiring diagrams of Open Collector encoder)

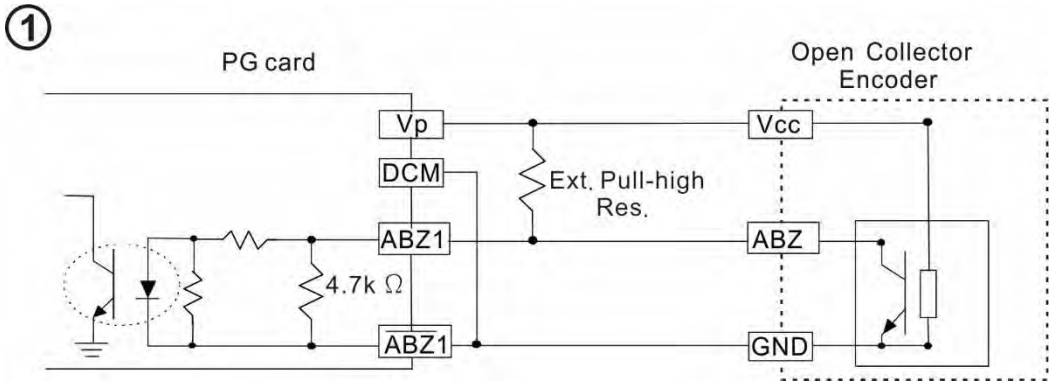

Figure 8-50

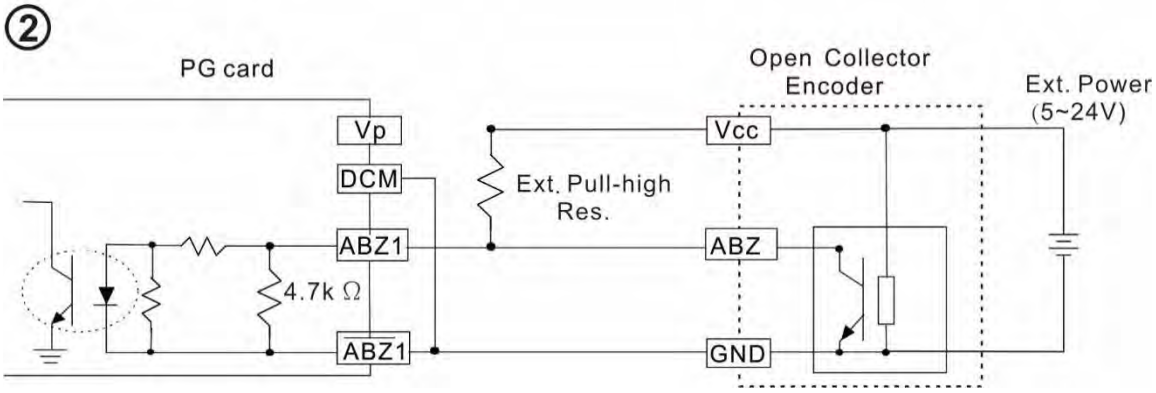

Figure 8-51

PG2 Wiring Diagram

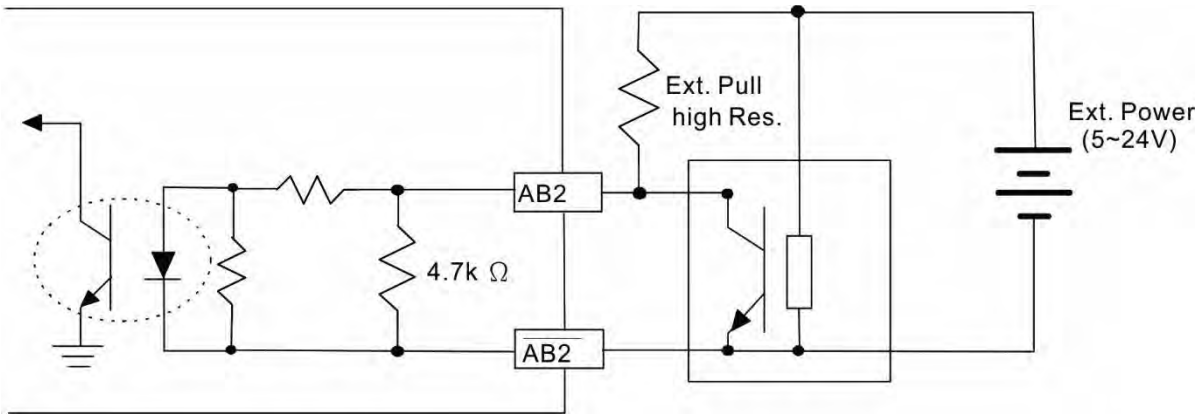

Figure 8-52

8-7-2 EMC-PG01L / EMC-PG02L Wiring Diagram

- ☑ Use a shielded cable to prevent interference. Do not run control wires parallel to any high voltage AC power line (200 V_{AC} and above).
- ☑ Recommended wire size 0.2–0.75 mm^2 (24–18 AWG).
- ☑ Cable length: Single-phase input, less than 30 m / two-phase input, less than 100m

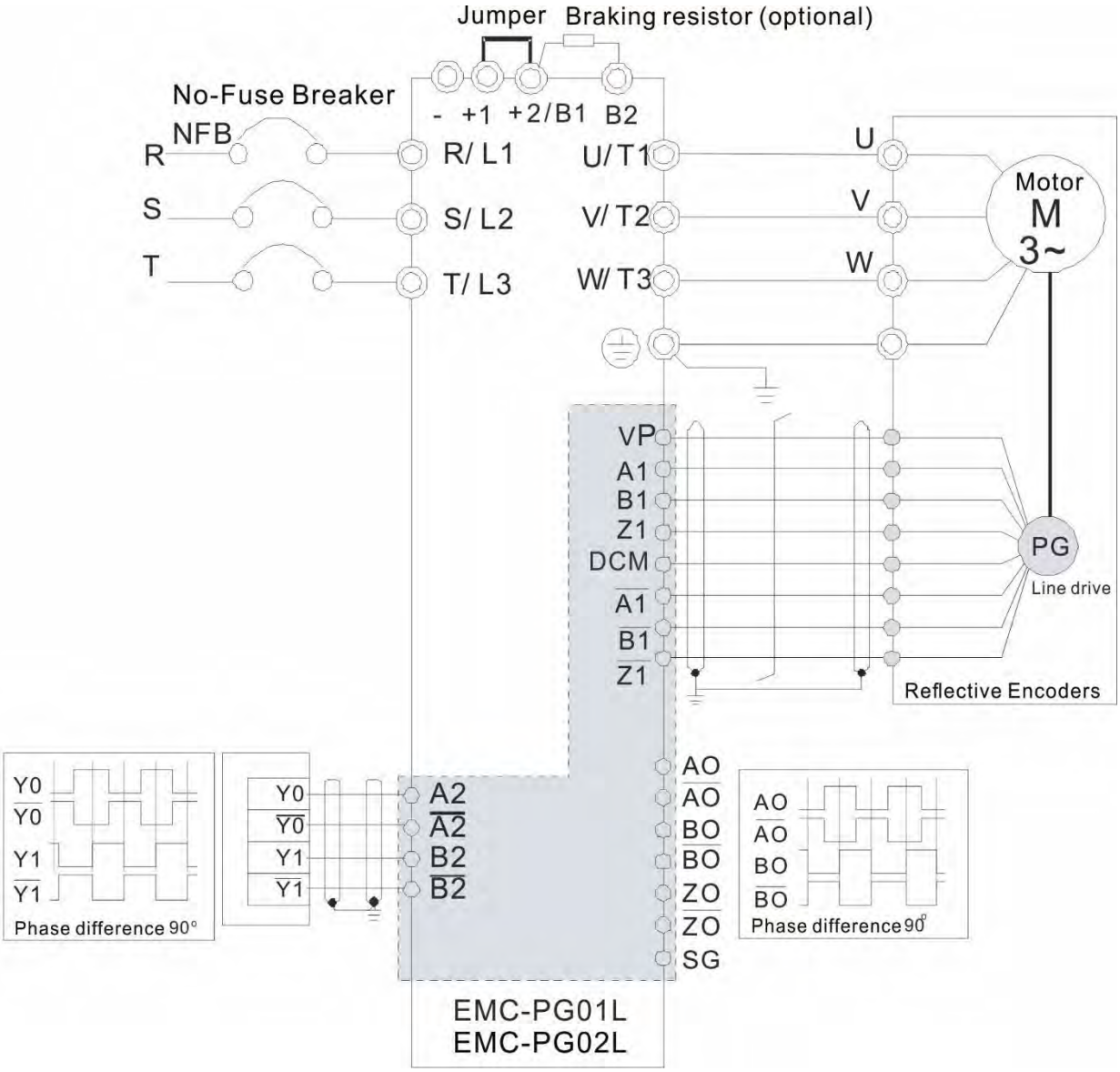

Figure 8-53

8-8 EMC-PG01O / EMC-PG02O -- PG card (Open collector)

8-8-1 Terminal descriptions

Set by Pr.10-00–10-02, Pr.10-16–10-18

Terminals		Descriptions
PG1	VP	Output voltage for power: +5 V / +12 V±5% (use FSW3 to switch +5 V / +12 V) Max. output current: 200 mA
	DCM	Common for power and signal
	A1, /A1, B1, /B1, Z1, /Z1	Encoder Input signal (Line Driver or Open Collector) Open Collector Input Voltage: +5 V – +24 V (Note 1) It can be single-phase or two-phase input. EMC-PG01O Max. input frequency: 300 kHz EMC-PG02O Max. input frequency: 30 kHz (Note 2)
PG2	A2, /A2, B2, /B2	Pulse Input Signal (Line Driver or Open Collector) Open Collector Input Voltage: +5 – +24 V (Note 1) EMC-PG01O Max. input frequency: 300 kHz EMC-PG02O Max. input frequency: 30 kHz (Note 2)
PG OUT	V+, V+	Needs external power source for PG OUT circuit. Input voltage of power: 12 –24 V
	V-	Input voltage for the negative side
	A/O, B/O, Z/O	PG Card Output signals has division frequency function: 1–255 times. On the open collector's output signal, add a high-pull resistor on the external power V+ – V- (e.g. power of PLC) to prevent the interference of the receiving signal. Max. [Three pull-up resistor are included in the package (1.8 kW / 1 W)] (Note 1) EMC-PG01O Max. input frequency: 300 kHz EMC-PG02O Max. input frequency: 30 kHz

NOTE:

1. Open Collector application, input current 5–15 mA to each set then each set needs one pull-up resistor. If input voltage of open collector is 24V, the power of encoder needs to be connected externally. Refer to diagram 2 of PG1.

5V	Recommended pull-up resistor: above 100–220 Ω, 1/2W
12V	Recommended pull-up resistor: above 510–1.35 kΩ, 1/2W
24V	Recommended pull-up resistor, above 1.8k–3.3k Ω, 1/2W

2. If the required bandwidth is not over 30 kHz at the application, it is recommended to use EMC-PG02O/L (bandwidth 30 kHz) to avoid interference.

PG1 card wiring diagram (the image 1 and 2 below are wiring diagrams of Open Collector encoder)

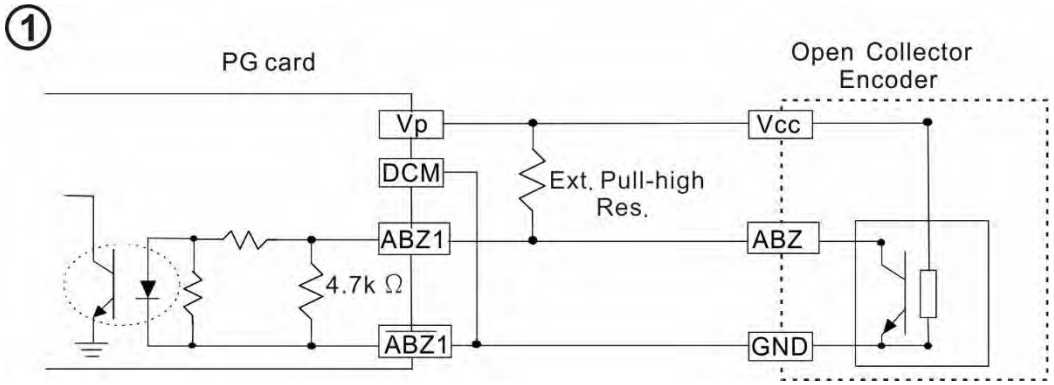

Figure 8-54

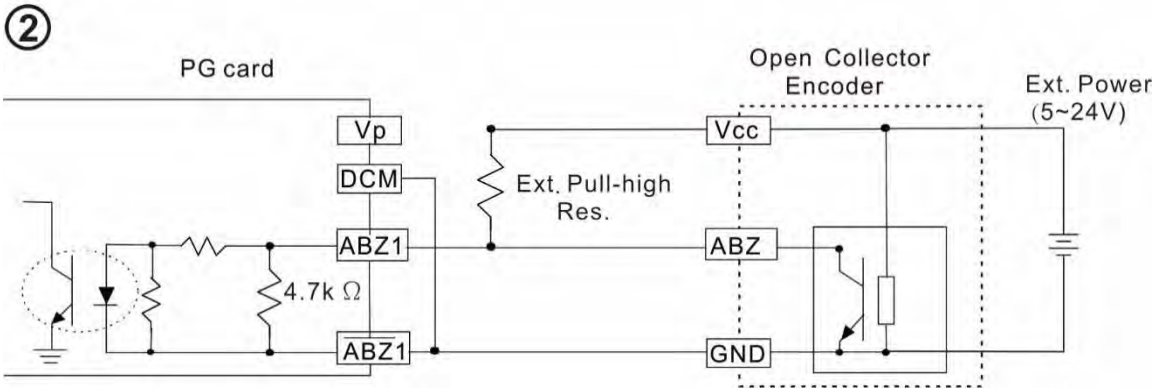

Figure 8-55

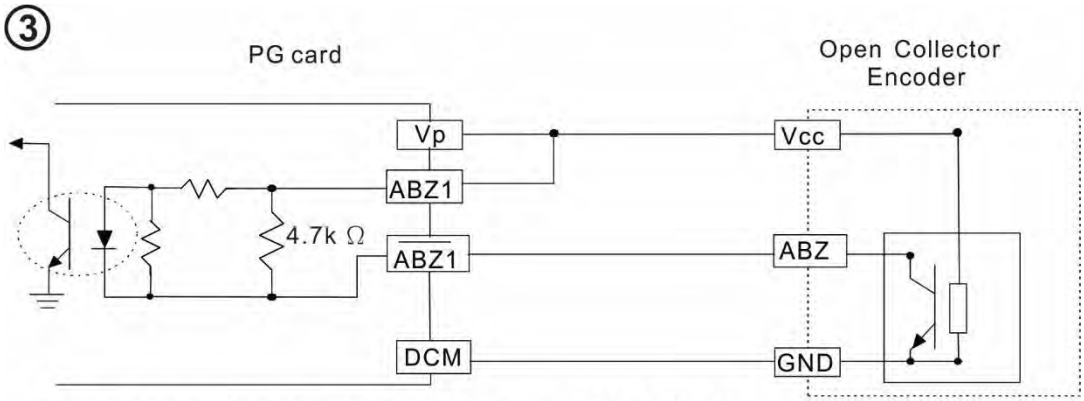

When wiring in this way, if there is a signal on EMC-PG01O's A1, B1 and Z1, LED lights is OFF.

If A1, B1 and Z1 have no signals, LED lights is ON.

Figure 8-56

PG2 Wiring Diagram

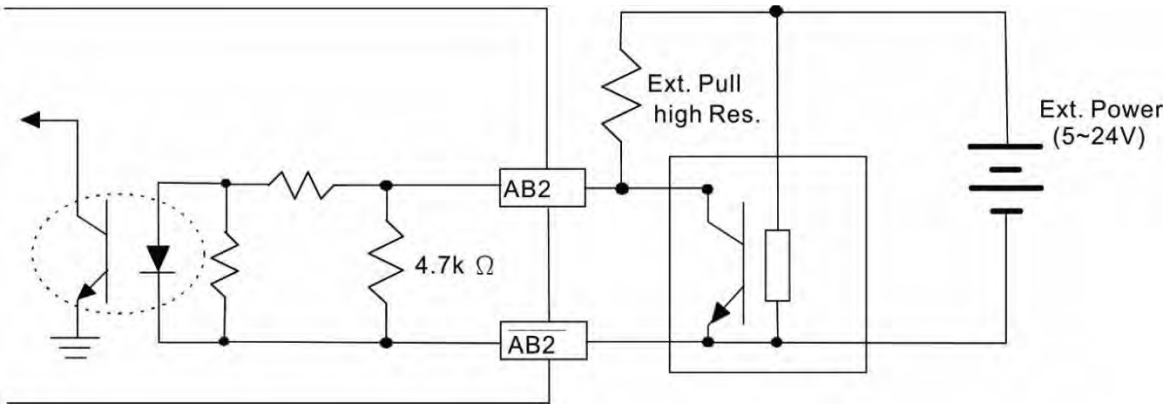

Figure 8-57

8-8-2 EMC-PG01O / EMC-PG02O Wiring Diagram

- ☑ Use a shielded cable to prevent interference. Do not run control wires parallel to any high voltage AC power line (200 V and above).
- ☑ Recommended wire size 0.2–0.75 mm^2 (24–18 AWG).
- ☑ Cable length: Single-phase input, less than 30 m / two-phase input, less than 100 m

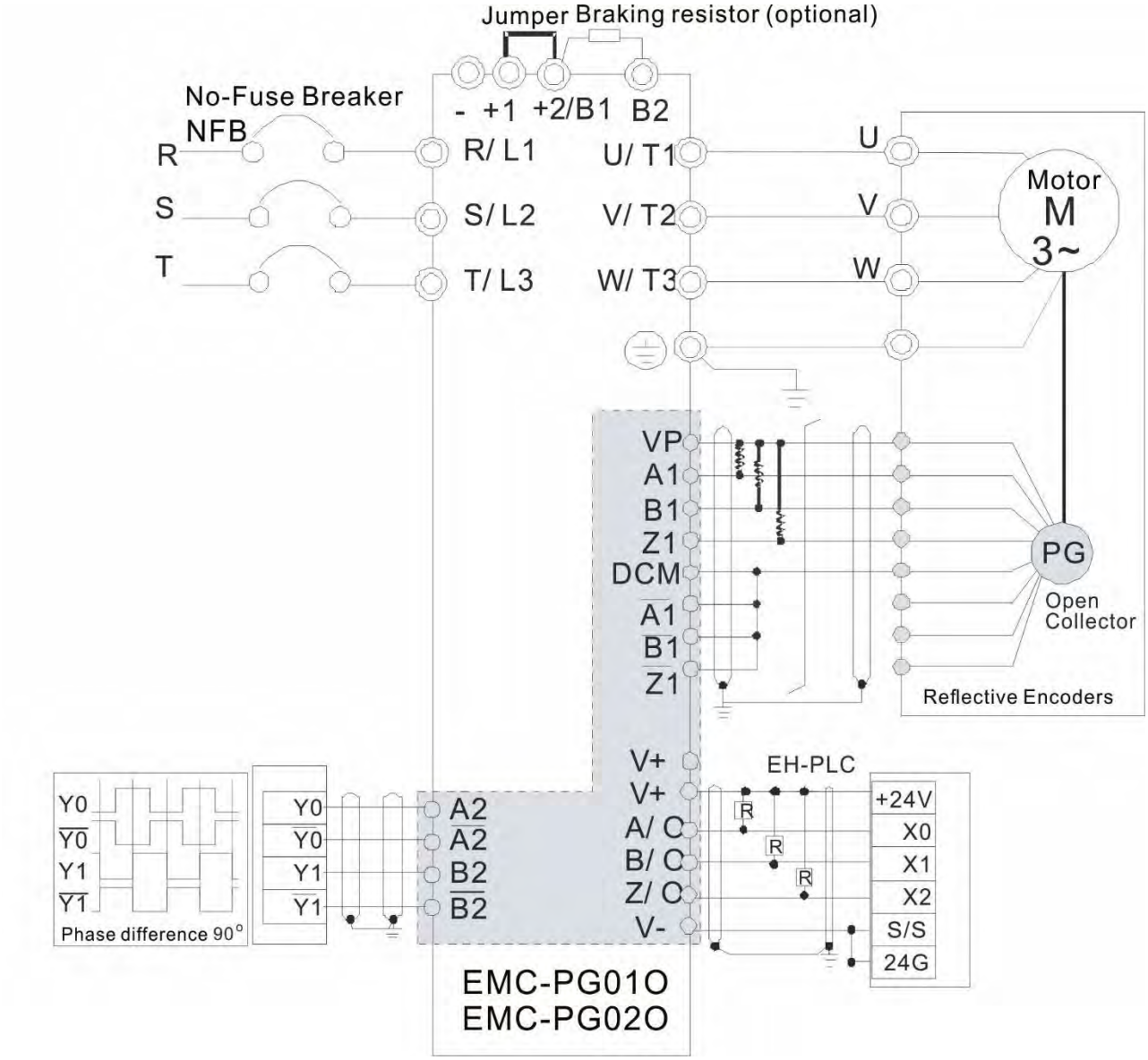

Figure 8-58

8-9 EMC-PG01U / EMC-PG02U -- PG card (ABZ Incremental encoder signal/ UVW Hall position signal input)

1. FSW1 S: Standard UVW Output Encoder; D: Delta Encoder
2. When using the Delta Encoder, wait for at least 250 ms after powering up to receive signals from UVW. If a running command is received before UVW signals finish, a PGF5 error message will be given. So wait for 250 ms before sending a running command.
3. EMC-PG02U has encoder disconnection detection function.

8-9-1 Terminal descriptions

Set by Pr.10-00–10-02, Pr.10-16–10-18

Terminals		Descriptions
PG1	VP	Output voltage for power: +5 V / +12 V±5% (use FSW3 to switch +5 V / +12 V) Max. output current: 200 mA
	DCM	Common for power and signal
	A1, /A1, B1, /B1, Z1, /Z1	Encoder input signal (Line Driver) It can be single-phase or two-phase input. Max. output frequency: 300 kHz
	U1, /U1, V1, /V1, W1, /W1	Encoder input signal
PG2	A2, /A2, B2, /B2	Pulse Input signal (Line Driver or Open Collector) Open Collector Input Voltage: +5 – +24 V (Note1) It can be single-phase or two-phase input. Max. output frequency: 300 kHz.
PG OUT	AO, /AO, BO, /BO, ZO, /ZO, SG	PG Card Output signals. It has division frequency function: 1–255 times Max. output voltage for Line driver: 5 V_{DC} Max. output current: 50 mA Max. output frequency: 300 kHz SG is the GND of PG card. It is also the GND of position machine or PLC to make the output signal to be the common pivot point.

NOTE:

1. Open Collector application, input current 5–15 mA to each set then each set needs one pull-up resistor.

5V	Recommended pull-up resistor: above 100–220 Ω, 1/2W
12V	Recommended pull-up resistor: above 510–1.35 kΩ, 1/2W
24V	Recommended pull-up resistor, above 1.8k–3.3 kΩ, 1/2W

PG2 Wiring Diagram

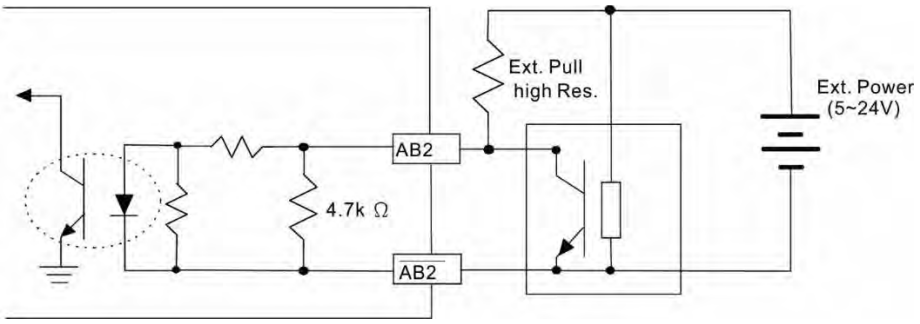

Figure 8-59

8-9-2 EMC-PG01U Wiring Diagram

- ☑ Use a shielded cable to prevent interference. Do not run control wires parallel to any high voltage AC power line (200 V and above).
- ☑ Recommended wire size 0.2–0.75 mm^2 (24–18 AWG).
- ☑ Cable length: Single-phase input, less than 30 m / two-phase input, less than 100 m

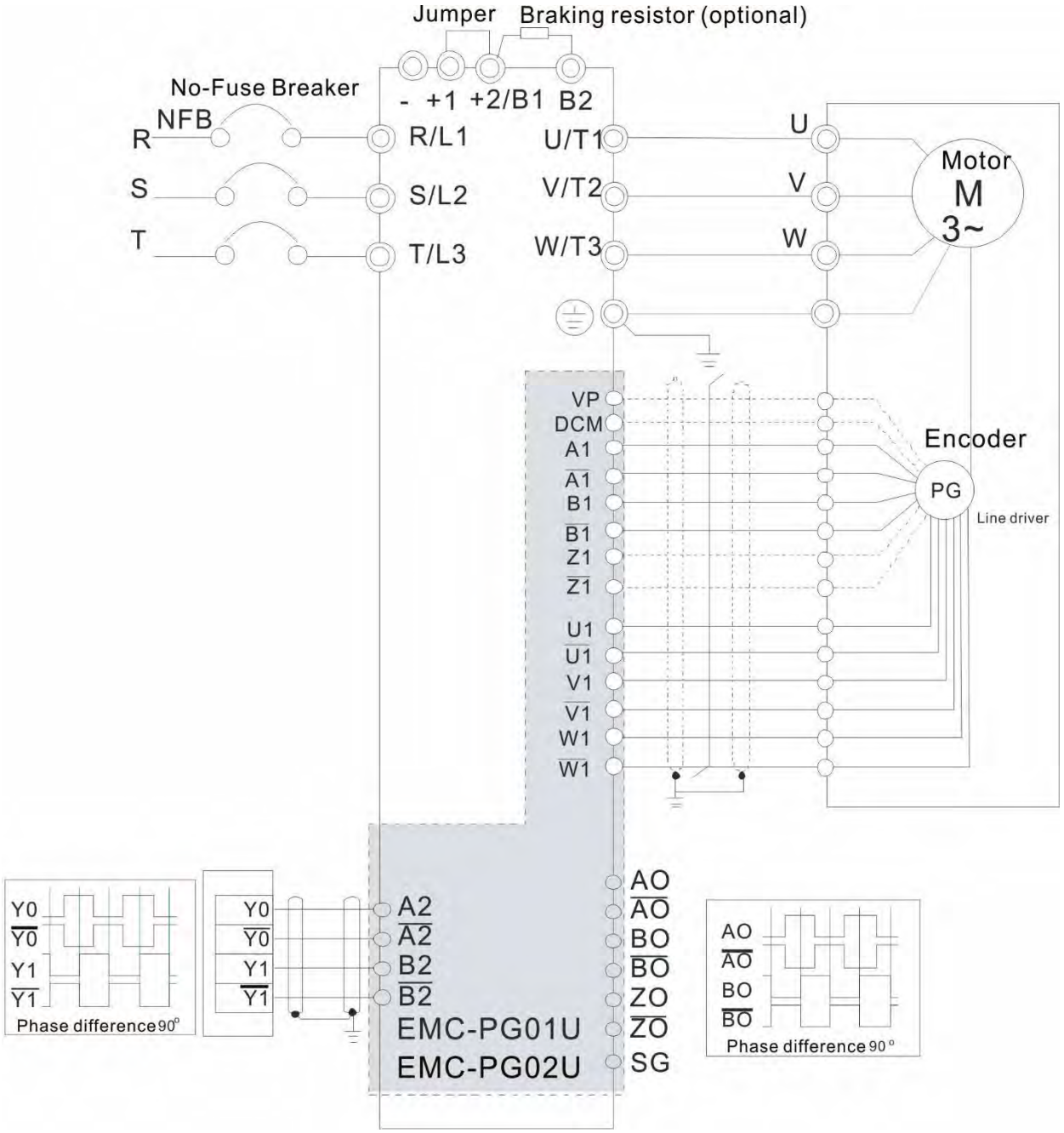

Figure 8-60

8-10 EMC-PG01R -- PG card (Resolver)

8-10-1 Terminal Descriptions

Set by Pr.10-00–Pr.10-02 and Pr.10-30 Resolver. (Pr.10-00 = 3, Pr.10-01 = 1024)

Terminals		Descriptions
PG1	R1- R2	Resolver Output Power 7 Vrms, 10 kHz
	S1, /S3, S2, /S4,	Resolver Input Signal (S2, /S4 = Sin; S1, /S3 = Cos) 3.5 ± 0.175 Vrms, 10 kHz
PG2	A2, /A2, B2, /B2	Pulse Input signal (Line Driver or Open Collector) Open Collector Input Voltage: +5 – +24 V (Note1) It can be single-phase or two-phase input. Max. output frequency: 300 kHz
PG OUT	AO, /AO, BO, /BO, ZO, /ZO, SG,	PG Card Output signals. It has division frequency function: 1–255 times Max. output voltage for Line driver: 5 V_{DC} Max. output current: 50 mA Max. output frequency: 300 kHz SG is the GND of PG card. It is also the GND of position machine or PLC to make the output signal to be the common pivot point.

NOTE:

1. Open Collector application, input current 5–15 mA to each set then each set needs one pull-up resistor.

5V	Recommended pull-up resistor: above 100–220 Ω, 1/2W
12V	Recommended pull-up resistor: above 510–1.35 kΩ, 1/2W
24V	Recommended pull-up resistor, above 1.8k–3.3 kΩ, 1/2W

PG2 Wiring Diagram

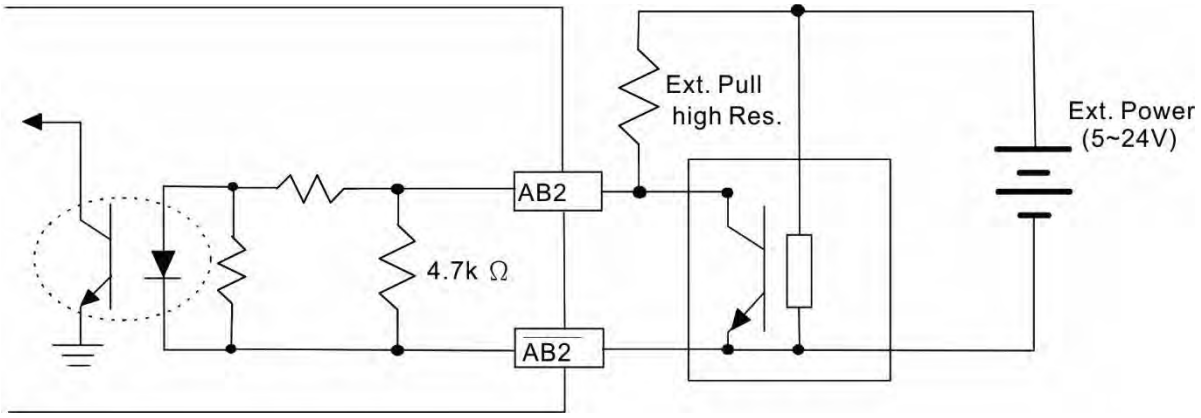

Figure 8-61

- DOS(Degradation of Signal): If the amplitude of the sine wave input of the S1-/S3/ S2-/S4 is lower than or higher than the encoder IC's specification, a red light will be on. The possible reasons which cause this problem are the following.
  1. The turns ratio of the resolver encoder is not 1:0.5 which makes the sine wave input of the S1-/S3/S2-/S4 not equal to 3.5±0.175 Vrms.
  2. While motor is running, motor creates common mode noise which makes accumulated voltage to be more than 3.5±0.175 Vrms
- LOT(Loss of Tracking): Compare the angle of S1-/S3/S2-/S4 sine wave input to the R1-R2 cosine wave. If their difference is more than 5 degree, a red light will be on. Here are the possible reasons why that happens:
  1. The output frequency of the PG card is incorrect.
  2. The specification of Resolver's encoder is not 10KHz
  3. The motor creates common mode noise while it is running. That causes a big difference, while the motor is rotating, between main winding's cosine wave angle and the sine wave angle of second and third windings.

8-10-2 EMC-PG01R Wiring Diagram

- ☑ Use a shielded cable to prevent interference. Do not run control wires parallel to any high voltage AC power line (200 V_{AC} and above).
- ☑ Recommended wire size 0.2–0.75 mm^2 (24–18 AWG).
- ☑ Cable length: PG1 input, less than 30 m; PG2 single-phase input, less than 30 m / two-phase input, less than 100 m

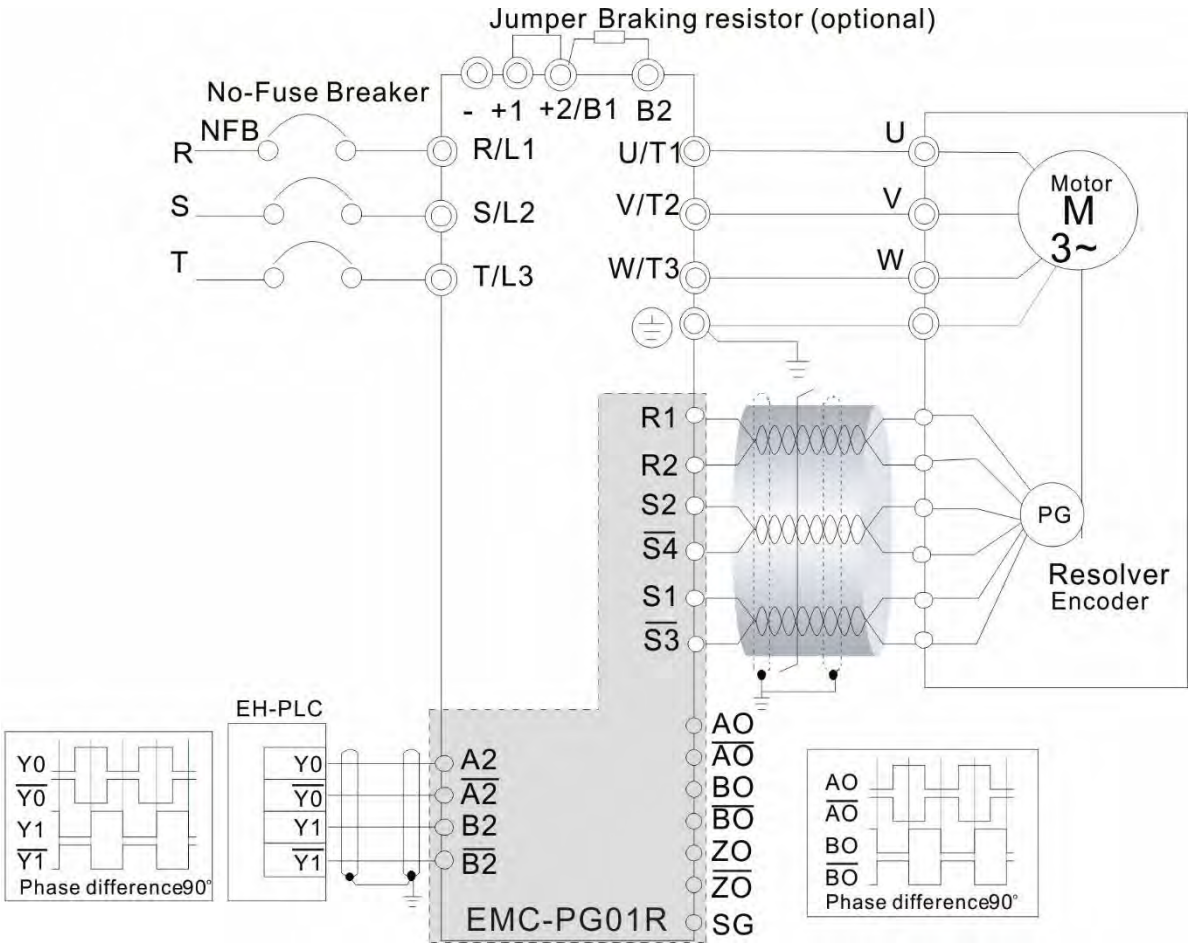

Figure 8-62

8-11 EMC-PG01H – PG card (Resolver)

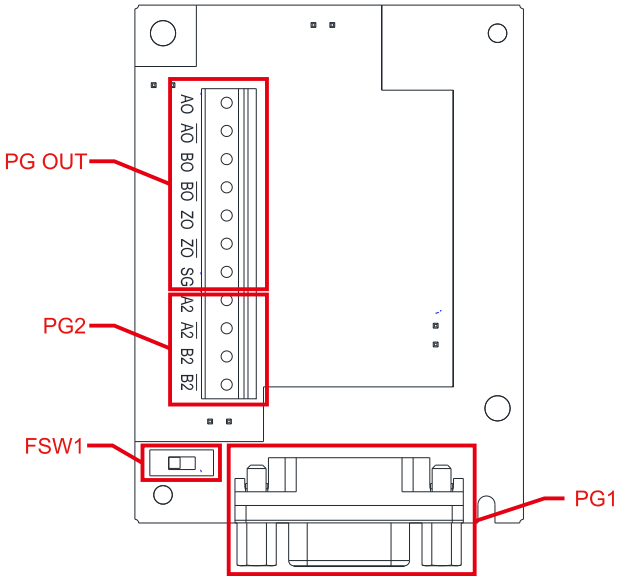

Figure 8-63

1. The PG1 at input side is SinCos signal of 1 Vpp, and the bandwidth is 600 kHz.
2. The principle of operation for a SinCos encoder is similar to a square-wave encoder, but use SinCos signal instead.
3. The pulse unit of SinCos encoder is ppr, 1024 ppr means 1024 SinCos signals per revolution with single phase.

8-11-1 Terminal Descriptions

Set by Pr.10-00–10-03 and Pr.10-16–10-18.

Terminals		Descriptions	
PG1	VP	Power output voltage: +5V / +8V ± 5% (+5V / +8V decided by FSW1) Max. output current: 200 mA	
	DCM	Digital control / Frequency signal common	
	A+, A-, B+, B-, R+, R-	Encoder wave difference signal input (Incremental signal) Max. output frequency: 600 kHz	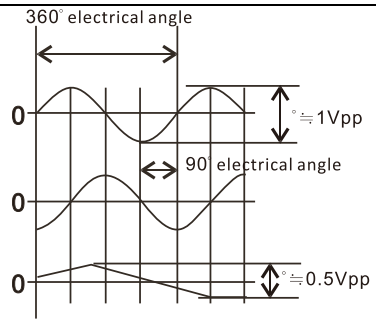 Figure 8-64
	C+, C-, D+, D-	Encoder wave difference signal input (Absolute signal)	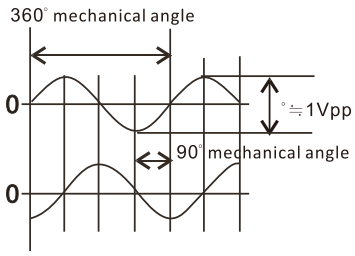 Figure 8-65
PG2	A2, /A2, B2, /B2	Pulse Input signal (Line Driver or Open Collector) Open Collector Input Voltage: +5 – +24V (Note1) It can be single-phase or two-phase input. Max. output frequency: 300 kHz	

Terminals		Descriptions
PG OUT	AO, /AO, BO, /BO, ZO, /ZO, SG	PG Card Output signals. It has division frequency function: 1–255 times Max. output voltage for Line driver: 5 V_{DC} Max. output current: 15 mA Max. output frequency: 600 kHz ± 5% SG is the GND of PG card. It is also the GND of position machine or PLC to make the output signal to be the common pivot point.
FSW1		Use FSW1 to switch the power of VP: +5V / +8V +8V +5V Figure 8-66

NOTE:

1. Open Collector application, input current 5–15 mA to each set then each set needs one pull-up resistor. If input voltage of open collector is 24V, the power of encoder needs to be connected externally. Please refer to diagram 2 of PG2.

5V	Recommended pull-up resistor: above 100–220 Ω, 1/2W
12V	Recommended pull-up resistor: above 510Ω–1.35 kΩ, 1/2W
24V	Recommended pull-up resistor: above 1.8k–3.3 kΩ, 1/2W

PG1 Terminal descriptions (15pin D-SUB female connector)

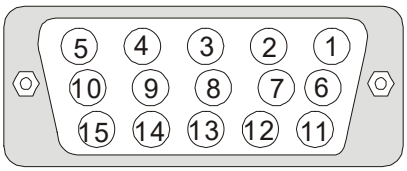

Figure 8-67

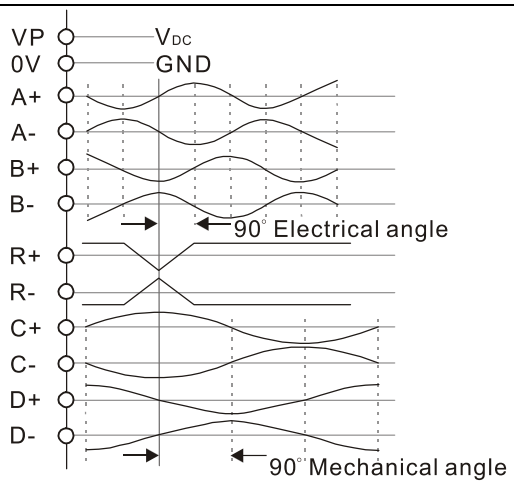

Figure 8-68

No.	Terminals	No.	Terminals
1	B-	9	VP
2	NC	10	C+
3	R+	11	C-
4	R-	12	D+
5	A+	13	D-
6	A-	14	NC
7	DCM	15	NC
8	B+		

PG2 wiring diagram

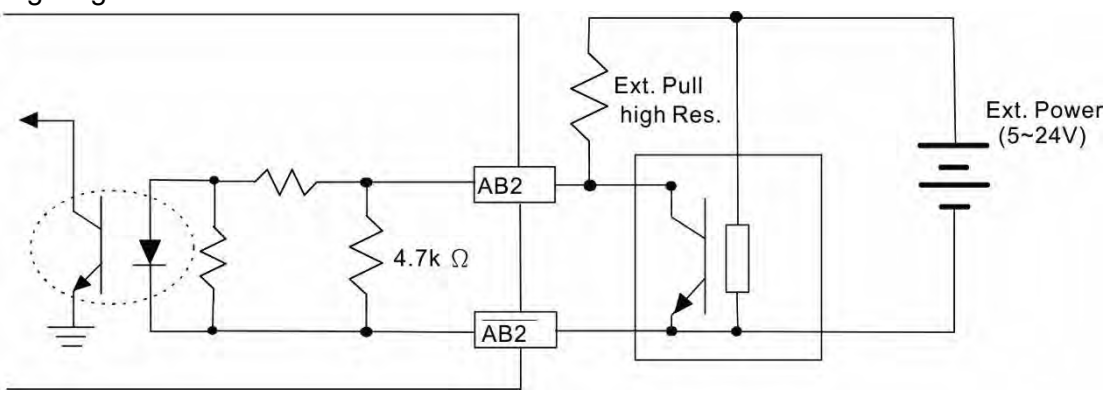

Figure 8-69

8-11-2 EMC-PG01H Wiring Diagram

- ☑ Use a shielded cable to prevent interference. Do not run control wires parallel to any high voltage AC power line (200 V_{AC} and above).
- ☑ Recommended wire size 0.2–0.75 mm^2 (24–18 AWG).
- ☑ Cable length: PG1 input, less than 10 m; PG2 single-phase input, less than 30 m / two-phase input, less than 100 m

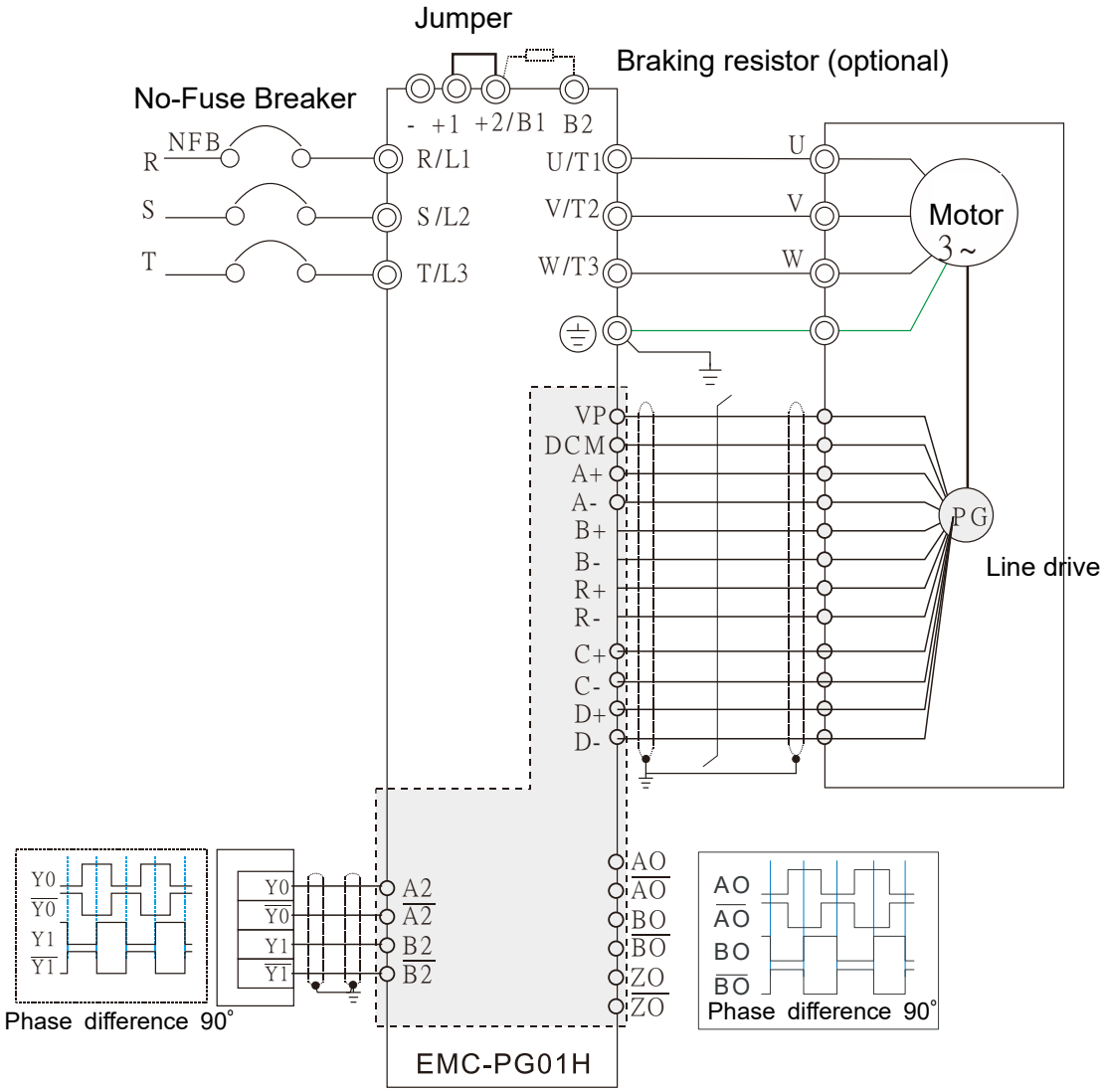

Figure 8-70

8-12 EMC-MC01 -- Motion control card

EMC-MC01 Motion control card supports C2000 Plus and CH2000 drives to meet the high accuracy and high response motion control demand. This product provides two functions: synchronous motion control mode, and decoding the communication encoder.
Comply with CiA402 international regulation, use EMC-MC01 with EtherCAT communication for its synchronous motion control function (CSP, CST). For the communication encoder function, in addition to receiving the encoder data and supplying the encoder power, the EMC-MC01 also supports a set of pulse input and a set of pulse output, which increases the diversity of practical applications.

8-12-1 Specification

Item		Specification
Main Specification	Motion Control Mode	CSP: Cyclic Synchronous Position Mode CST: Cyclic Synchronous Torque Mode HM: Homing Mode PP: Profile Position Mode PT: Profile Torque Mode VL: Velocity Mode IP: Interpolated Position Mode
	Encoder Format	Supports Tamagawa encoder signal, use DATA+ / DATA- to decode the signal
Hardware Specification	Dimension (W × H × D)	52.5 mm × 75.9 mm × 16.8 mm
	Encoder Input	RS-485 (Tamagawa communication format)
	Power Output	5V / 8V ± 5%
	Wire Length	Maximum 10 m
Certifications		ESD (IEC 61800-5-1, IEC 61000-4-2) EFT (IEC 61800-5-1, IEC 61000-4-4) Surge Test (IEC 61800-5-1, IEC 61000-4-5) Conducted Susceptibility Test (IEC 61800-5-1, IEC 61000-4-6)
Operation Environment		Temperature: -10–50°C Humidity: 90%

8-12-2 Terminal Specification

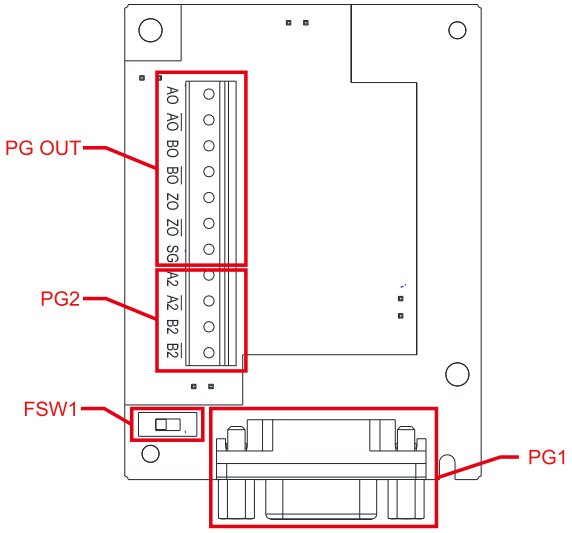

Figure 8-71

Terminal		Description
PG1	VP	Power output voltage: +5V / +8V ± 5% (+5V / +8V determined by FSW1) *1 Max. output current: 200 mA
	DCM	Digital control / Frequency signal common
	DATA+, DATA-	Read and process the encoder data transmission
PG2	A2, /A2, B2, /B2	Pulse Input signal (Line Driver or Open Collector) Open Collector Input Voltage: +5V – +24V *2 It can be single-phase or two-phase input Max. input frequency: 300 kHz
PG OUT	AO, /AO, BO, /BO, ZO, /ZO, SG	PG Card output signals. It has division frequency function: 1–255 times Max. output voltage for Line driver: 5 V_{DC} Max. output current:15 mA Max. output frequency: 600 kHz ± 5% SG is the GND of PG card. It is also the GND of position machine or PLC to make the output signal to be the common pivot point.
FSW1		Use FSW1 to switch the power of VP: +5V / +8V *1 +8V +5V

NOTE:

1. The current input voltage for Tamagawa encoder is +5V, ensure to switch to +5V before the installation. The voltage +8V is reserved for the power demand of other encoders in the future.
2. Open Collector application, input current 5–15 mA to each set then each set needs one pull-up resistor. If input voltage of open collector is 24V, the power of encoder needs to be connected externally. Refer to diagram 2 of PG2.

PG1 Terminal Descriptions (15pin D-SUB female connector)

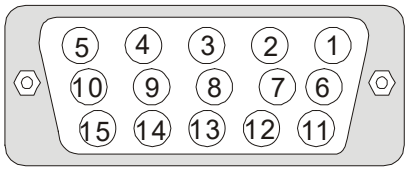

Figure 8-72

No.	Terminal	No.	Terminal
1	Reserved	9	VP
2	NC	10	NC
3	Data+	11	NC
4	Data-	12	NC
5	Reserved	13	NC
6	Reserved	14	Reserved
7	DCM	15	Reserved
8	Reserved		

PG2 Wiring Diagram

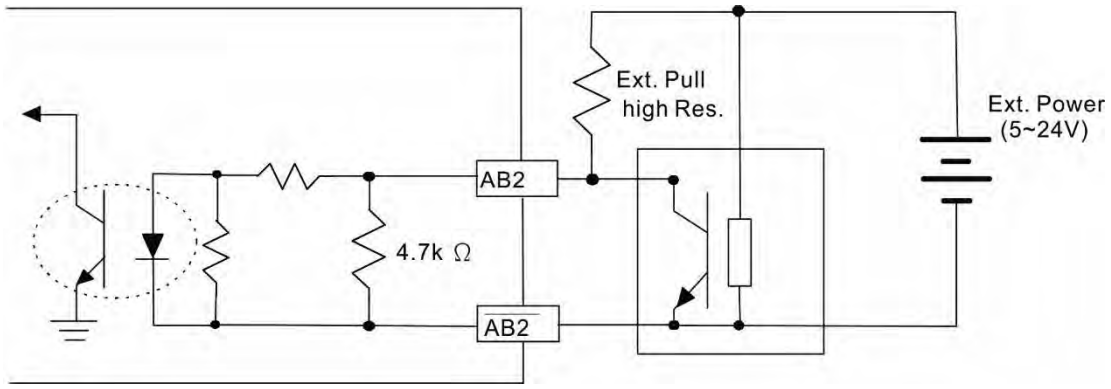

Figure 8-73

8-12-3 EMC-MC01 Wiring Diagram

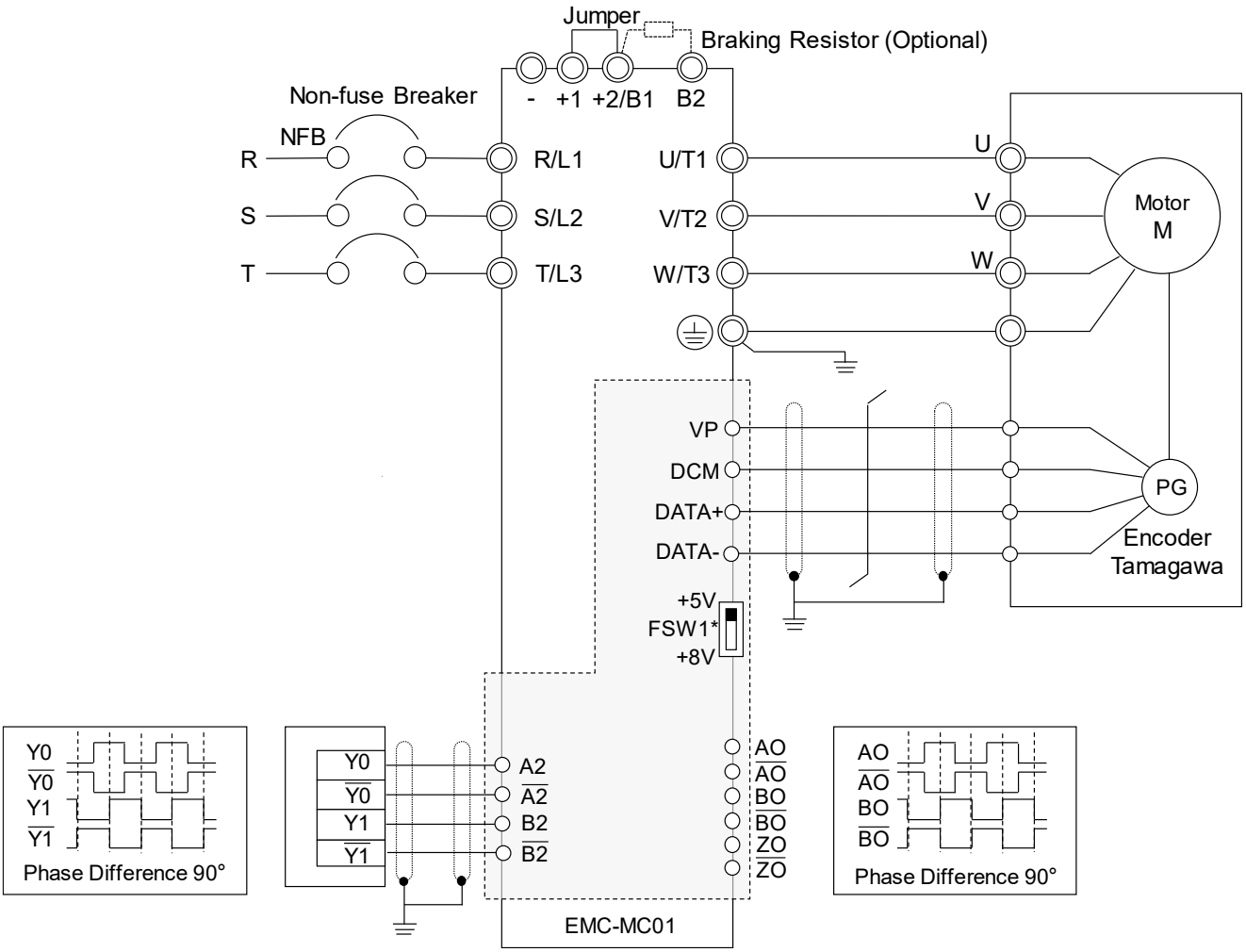

NOTE: The current input voltage for Tamagawa encoder is +5V, ensure to switch to +5V before the installation. The voltage +8V is reserved for the power demand of other encoders in the future.

8-12-4 Drive Setting

The following is the drive's parameter setting when install EMC-MC01.

Example: Delta Servo Motor MSJ series 7 kW models (Model: MSJ-LA2070E42E):

Encoder Information

Signal Format: Tamagawa

Resolution: 17bit (Single-turn)

2^{17} = 131072

131072 ÷ 4 = 32768

Parameter Setting

Refer to the following descriptions for more details.

Pr.10-00 = 8

Pr.10-01 = 32768

Pr.10-02 = 1

10-00 Encoder Type Selection

Default: 0

Settings 0: Disabled
8: Tamagawa

- Pr.10-00 = 8 (Tamagawa), encoder input type (Pr.10-02) is set to 1. The default of encoder pulses per revolution (Pr.10-01) is 32768.

10-01 Encoder Pulses per Revolution

Default: 600

Settings 1–65535

- Pr.10-00 = 8 (Tamagawa), the default for Pr.10-01 is 32768, which is only applied to Tamagawa encoder with 17bit single-turn revolution.
- When the single-turn resolution of communication encoder is not 17 bit, you can change the setting for Pr.10-01. Divide the actual encoder single-turn resolution by 4 before the setting. For example: when the communication encoder resolution is 14 bit (16384), Pr.10-01 = 4096. This setting method does not affect the encoder resolution, it is used only to comply the old ABZ incremental encoder setting rules.
- Currently support the encoder resolution to maximum 17 bit.

10-02 Encoder Input Type Setting

Default: 0

- When Pr.10-00 = 8 (Tamagawa), Pr.10-02 is set to 1.
- When Pr.10-00 = 8 (Tamagawa): if the drive appears PGF1 error when pressing RUN under the PG mode, switch any two of the motor UVW wires then restart the operation. If it is PM, you need to re-execute the dynamic test for PM magnetic pole (Pr.05-00 = 4).

10-03 Frequency Division Output Setting (Denominator)

Default: 1

Settings 1–255

- When the encoder input type is Tamagawa (Pr.10-00 = 8), set Pr.10-03 as indicated below:
  One turn of the encoder, PG card single-phase pulse output (A-phase and B-phase) =
  $\left(\frac{\text{Encoder single-turn resolution}}{2^{(10\text{-}03)+5}}\right) \div 4$ 。
  For example: When the encoder resolution is 131072 and Pr.10-03 = 1, the PG card single-turn pulse output for one turn of the encoder: $\left(\frac{\text{Encoder single-turn resolution}}{2^{(10\text{-}03)+5}}\right) \div 4 = (131072 \div 64) \div 4 =$ 512, both A-phase and B-phase output 512 pulses, the phase difference is 90 degrees.
- When Pr.10-03 value + 5 > 30, the program processes as 30.
  For example: Pr.10-03 = 50, the PG card single-phase pulse output (A-phase and B-phase) for one turn of the encoder is $\left(\frac{\text{Encoder single-turn resolution}}{2^{30}}\right) \div 4$ 。

  NOTE: Encoder single-turn resolution = Pr.10-01 × 4.

8-13 CMC-PD01 -- Communication card, PROFIBUS DP

8-13-1 Features

1. Supports PZD control data exchange.
2. Supports PKW access AC motor drive parameters.
3. Supports user diagnosis function.
4. Auto-detects baud rates; supports a Max. 12 Mbps.

8-13-2 Product Profile

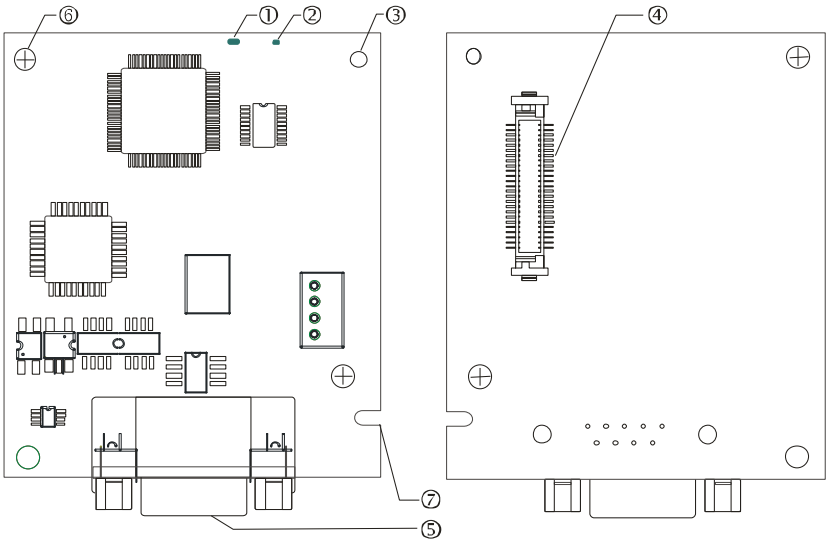

Figure 8-74

1. NET indicator
2. POWER indicator
3. Positioning hole
4. AC motor drive connection port
5. PROFIBUS DP connection port
6. Screw fixing hole
7. Fool-proof groove

8-13-3 Specifications

PROFIBUS DP Connector

Interface	DB9 connector
Transmission Method	High-speed RS-485
Transmission Cable	Shielded twisted pair cable
Electrical Isolation	500 V_{DC}

Communication

Message Type	Cyclic data exchange
Module Name	CMC-PD01
GSD Document	DELA08DB.GSD
Company ID	08DB (HEX)
Serial Transmission Speed Supported (auto-detection)	9.6 Kbps; 19.2 Kbps; 93.75 Kbps; 187.5 Kbps; 125 Kbps; 250 Kbps; 500 Kbps; 1.5 Mbps; 3 Mbps; 6 Mbps; 12 Mbps (bit per second)

Electrical Specification

Power Supply Voltage	5 V_{DC} (supplied by the AC motor drive)
Insulation Voltage	500 V_{DC}
Power Consumption	1 W
Weight	28 g

Environment

Noise Immunity	ESD(IEC 61800-5-1,IEC 61000-4-2) EFT(IEC 61800-5-1,IEC 61000-4-4) Surge Teat(IEC 61800-5-1,IEC 61000-4-5) Conducted Susceptibility Test(IEC 61800-5-1,IEC 61000-4-6)
Operation / Storage	Operation: -10–50ºC (temperature), 90% (humidity) Storage: -25–70ºC (temperature), 95% (humidity)
Shock / Vibration Resistance	International standards: IEC61131-2, IEC60068-2-6 (TEST Fc) / IEC61131-2 & IEC 60068-2-27 (TEST Ea)

8-13-4 Installation

PROFIBUS DP Connector

PIN	PIN name	Definition
1	-	Not defined
2	-	Not defined
3	Rxd/Txd-P	Sending/receiving data P(B)
4	-	Not defined
5	DGND	Data reference ground
6	VP	Power voltage – positive
7	-	Not defined
8	Rxd/Txd-N	Sending/receiving data N(A)
9	-	Not defined

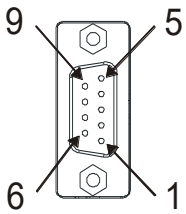

Figure 8-75

8-13-5 LED Indicator & Troubleshooting

There are 2 LED indicators on CMC-PD01: POWER LED and NET LED. POWER LED displays the status of the working power. NET LED displays the connection status of the communication.

POWER LED

LED status	Indication	Corrective Action
Green light ON	Power supply in normal status.	--
OFF	No power	Check if the connection between CMC-PD01 and AC motor drive is normal.

NET LED

LED status	Indication	Corrective Action
Green light ON	Normal status	--
Red light ON	CMC-PD01 is not connected to PROFIBUS DP bus.	Connect CMC-PD01 to PROFIBUS DP bus.
Red light flashes	Invalid PROFIBUS communication address	Set the PROFIBUS address of CMC-PD01 between 1–125 (decimal)
Orange light flashes	CMC-PD01 fails to communication with AC motor drive.	Switch off the power and check whether CMC-PD01 is correctly and normally connected to AC motor drive.

8-14 CMC-DN01 -- Communication card, DeviceNet

8-14-1 Functions

1. Based on the high-speed communication interface of Delta HSSP protocol, able to conduct immediate control to AC motor drive.
2. Supports Group 2 only slave device connection and polling I/O data exchange.
3. For I/O mapping, supports Max. 32 words of input and 32 words of output.
4. Supports EDS file configuration in DeviceNet configuration software.
5. Supports all baud rates on DeviceNet bus: 125 Kbps, 250 Kbps, 500 Kbps and extendable serial transmission speed mode.
6. Node address and serial transmission speed can be set up on AC motor drive.
7. Power supplied from AC motor drive.

8-14-2 Product Profile

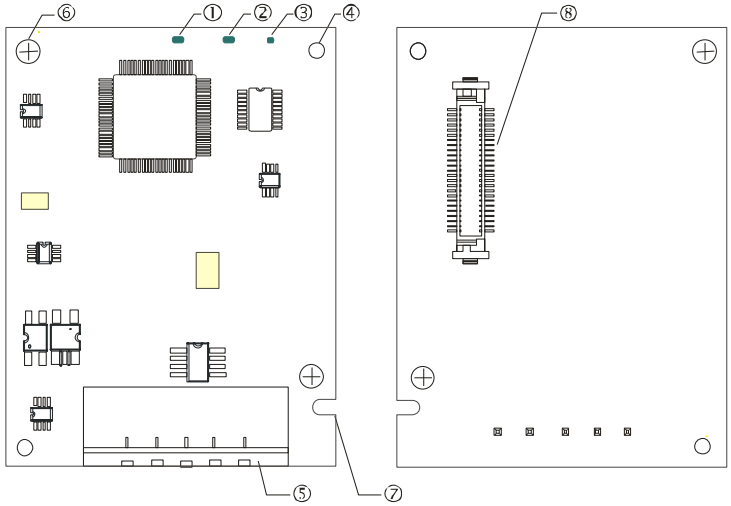

Figure 8-76

1. NS indicator
2. MS indicator
3. POWER indicator
4. Positioning hole
5. DeviceNet connection port
6. Screw fixing hole
7. Fool-proof groove
8. AC motor drive connection port

8-14-3 Specifications

DeviceNet Connector

Interface	5-PIN open removable connector of 5.08 mm PIN interval
Transmission	CAN
Transmission Cable	Shielded twisted pair cable (with 2 power cables)
Transmission Speed	125 Kbps, 250 Kbps, 500 Kbps and extendable serial transmission speed
Network Protocol	DeviceNet protocol

AC Motor Drive Connection Port

Interface	50 PIN communication terminal
Transmission	SPI communication
Terminal Function	1. Communicating with AC motor drive 2. Transmitting power supply from AC motor drive
Communication	Delta HSSP protocol

Electrical Specification

Power Supply	5 V_{DC} (supplied by AC motor drive)
Insulation Voltage	500 V_{DC}
Communication Wire Power Consumption	0.85 W
Power Consumption	1 W
Weight	23 g

Environment

Noise Immunity	ESD (IEC 61800-5-1,IEC 61000-4-2) EFT (IEC 61800-5-1,IEC 61000-4-4) Surge Teat(IEC 61800-5-1,IEC 61000-4-5) Conducted Susceptibility Test (IEC 61800-5-1,IEC 61000-4-6)
Operation / Storage	Operation: -10–50ºC (temperature), 90% (humidity) Storage: -25–70ºC (temperature), 95% (humidity)
Shock / Vibration Resistance	International standards: IEC 61800-5-1, IEC 60068-2-6 / IEC 61800-5-1, IEC 60068-2-27

8-14-4 Installation

DeviceNet Connector

PIN	Signal	Color	Definition
1	V+	Red	DC24V
2	H	White	Signal+
3	S	-	Earth
4	L	Blue	Signal-
5	V-	Black	0V

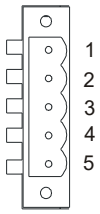

Figure 8-77

8-14-5 LED Indicator & Troubleshooting

There are 3 LED indicators on CMC-DN01: POWER LED, MS LED and NS LED. POWER LED displays the status of power supply. MS LED and NS LED are dual-color LED, displaying the connection status of the communication and error messages.

POWER LED

LED status	Indication	Corrective Action
OFF	Power supply in abnormal status.	Check the power supply of CMC-DN01.
Green light ON	Power supply in normal status	--

NS LED

LED status	Indication	Corrective Action
OFF	No power supply or CMC-DN01 does not pass the MAC ID test.	1. Check the power of CMC-DN01 and see if the connection is normal. 2. Make sure at least one or more nodes are on the bus. 3. Check if the serial transmission speed of CMC-DN01 is the same as that of other nodes.
Green light flashes	CMC-DN01 is on-line but does not connect to the master.	1. Configure CMC-DN01 to the scan list of the master. 2. Re-download the configured data to the master.
Green light ON	CMC-DN01 is on-line and normally connects to the master	--
Red light flashes	CMC-DN01 is on-line, but I/O connection is timed-out.	1. Check if the network connection is normal. 2. Check if the master operates normally.
Red light ON	1. The communication is down. 2. MAC ID test failure. 3. No network power supply. 4. CMC-DN01 is off-line.	1. Make sure all the MAC IDs on the network are not repeated. 2. Check if the network installation is normal. 3. Check if the baud rate of CMC-DN01 is consistent with that of other nodes. 4. Check if the node address of CMC-DN01 is illegal. 5. Check if the network power supply is normal.

MS LED

LED status	Indication	Corrective Action
OFF	No power supply or being off-line	Check the power supply of CMC-DN01 and see if the connection is normal.
Green light flashes	Waiting for I/O data	Switch the master PLC to RUN status
Green light ON	I/O data are normal	--
Red light flashes	Mapping error	1. Reconfigure CMC-DN01 2. Re-power AC motor drive
Red light ON	Hardware error	1. See the fault code displayed on the AC motor drive. 2. Send back to the factory for repair if necessary.
Orange light flashes	CMC-DN01 is establishing connection with AC motor drive.	If the flashing lasts for a long time, turn off the power and check if CMC-DN01 and AC motor drive are correctly installed and normally connected to each other.

8-15 CMC-EIP01 / CMC-EIP01 -- Communication card, EtherNet/IP

8-15-1 Features

1. Supports Modbus TCP and Ethernet/IP protocol
2. User-defined corresponding parameters (use with EIP V1.06)
3. IP filter simple firewall function
4. MDI / MDI-X auto-detect
5. Baud rate: 10 / 100 Mbps auto-detect

8-15-2 Product Profile

CMC-EIP01

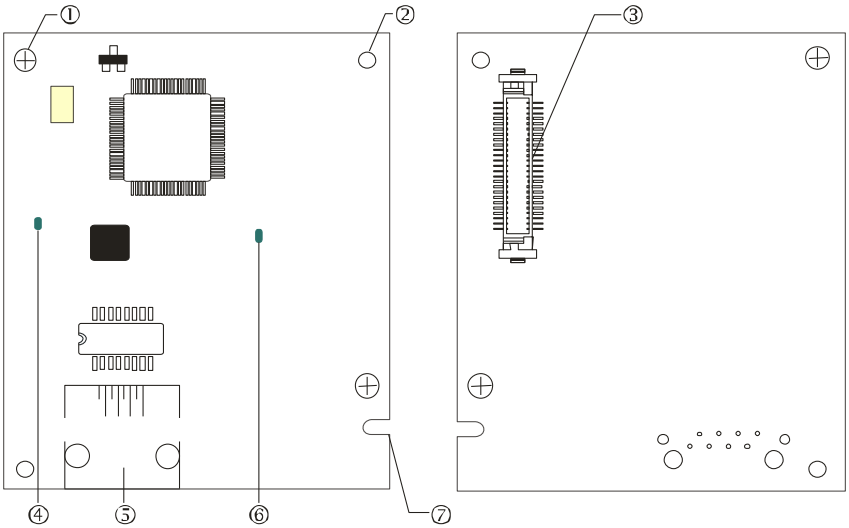

Figure 8-78

1. Screw fixing hole
2. Positioning hole
3. AC motor drive connection port
4. LINK indicator
5. RJ-45 connection port
6. POWER indicator
7. Fool-proof groove

CMC-EIP02

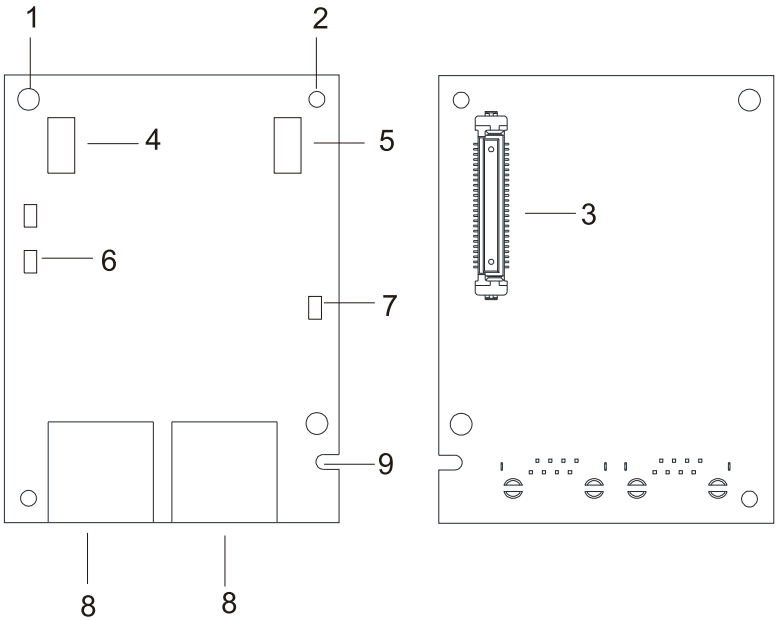

1. Screw fixing hole
2. Positioning hole
3. AC motor drive connection port
4. NS indicator
5. MS indicator
6. LINK indicator
7. POWER indicator
8. Ethernet connection port (RJ45)
9. Fool-proof groove

8-15-3 Specifications

Network Interface

Interface	RJ45 with Auto MDI/MDIX
Number of Ports	CMC-EIP01: 1 Port CMC-EIP02: 2 Ports (switch)
Transmission Method	IEEE 802.3, IEEE 802.3u
Transmission Cable	Category 5e shielding 100M
Transmission Speed	10/100 Mbps Auto-Detect
Network Protocol	ICMP, IP, TCP, UDP, DHCP, BOOTP, SMTP, Modbus TCP, EtherNet/IP

Electrical Specification

Weight	25g (CMC-EIP01) / 30g (CMC-EIP02)
Insulation Voltage	500 V_{DC}
Power Consumption	0.8 W (CMC-EIP01) / 1.4 W (CMC-EIP02)
Power Supply Voltage	5 V_{DC}

Environment

Noise Immunity	ESD (IEC 61800-5-1,IEC 61000-4-2) EFT (IEC 61800-5-1,IEC 61000-4-4) Surge Test (IEC 61800-5-1,IEC 61000-4-5) Conducted Susceptibility Test (IEC 61800-5-1,IEC 61000-4-6)
Operation / Storage	Operation: -10–50°C (temperature), 90% (humidity) Storage: -25–70°C (temperature), 95% (humidity)
Vibration / Shock Immunity	International standard: IEC 61800-5-1, IEC 60068-2-6 / IEC 61800-5-1, IEC 60068-2-27

8-15-4 Installation

Connecting CMC-EIP01 to Network

1. Turn off the power of the drive.
2. Open the cover of the AC motor drive.
3. Connect a CAT-5e network cable to the RJ45 port on the CMC-EIP01 (See Figure 8-79).

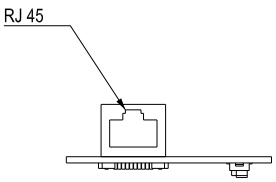

Figure 8-79

RJ45 PIN Definition

PIN	Signal	Definition
1	Tx+	Positive pole for data transmission
2	Tx-	Negative pole for data transmission
3	Rx+	Positive pole for data receiving
4	--	N/C

PIN	Signal	Definition
5	--	N/C
6	Rx-	Negative pole for data receiving
7	--	N/C
8	--	N/C

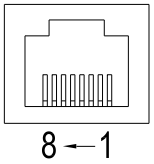

Figure 8-80

8-15-5 CH2000 Communication Parameters Settings for Connecting to Ethernet

When the CH2000 is connected to an Ethernet network, set up the communication parameters for it according to the table below. The Ethernet master is only able to read and write the frequency words and control word of CH2000 after the communication parameters are set.

Parameter (Dec)	Function	Set value (Dec)	Explanation
00-20	Master frequency command setting	8	The frequency command is controlled by communication card.
00-21	Source of operation command setting	5	The operation command is controlled by communication card.
09-30	Communication decoding method	0	The decoding method for Delta AC motor drive
09-75	IP configuration	0	0: Static IP 1: Dynamic IP (DHCP)
09-76	IP address -1	192	IP address 192.168.1.5
09-77	IP address -2	168	IP address 192.168.1.5
09-78	IP address -3	1	IP address 192.168.1.5
09-79	IP address -4	5	IP address 192.168.1.5
09-80	Netmask -1	255	Netmask 255.255.255.0
09-81	Netmask -2	255	Netmask 255.255.255.0
09-82	Netmask -3	255	Netmask 255.255.255.0
09-83	Netmask -4	0	Netmask 255.255.255.0
09-84	Default gateway -1	192	Default gateway 192.168.1.1
09-85	Default gateway -2	168	Default gateway 192.168.1.1
09-86	Default gateway -3	1	Default gateway 192.168.1.1
09-87	Default gateway -4	1	Default gateway 192.168.1.1

8-15-6 LED Indicator & Troubleshooting

There are two LED indicators on the CMC-EIP01: POWER LED and LINK LED. The POWER LED displays the status of power supply, and the LINK LED displays the connection status of the communication.

LED Indicators

LED	Status		Indication	Corrective Action
POWER	Green	ON	Power supply in normal status	--
		OFF	No power supply	Check the power supply.
LINK	Green	ON	Network connection in normal status	--
		Flashes	Network in operation	--
		OFF	Network not connected	Check if the network cable is connected.

Troubleshooting

Abnormality	Cause	Corrective Action
POWER LED OFF	AC motor drive not powered	Check the power of the AC motor drive, and see if the power supply is normal.
	The CMC-EIP01 not connected to the AC motor drive	Ensure that CMC-EIP01 is connected to the AC motor drive.
LINK LED OFF	The CMC-EIP01 not connected to network	Ensure that the network cable is correctly connected to network.
	Poor contact to RJ45 connector	Ensure that RJ45 connector is connected to Ethernet port.
Cannot find communication card	The CMC-EIP01 not connected to network	Ensure that CMC-EIP01 is connected to network.
	The PC and CMC-EIP01 in different network and blocked by network firewall.	Search by IP or set up relevant settings by the AC motor drive keypad.
Cannot open CMC-EIP01 setup page	The CMC-EIP01 not connected to network	Ensure that CMC-EIP01 is connected to the network.
	Incorrect communication setting in DCISoft	Ensure that the communication setting in DCISoft is set to Ethernet.
	The PC and CMC-EIP01 in different networks and blocked by network firewall.	Set up with the AC motor drive keypad.
The CMC-EIP01 setup page opens successfully but webpage monitoring is unavailable	Incorrect network setting in CMC-EIP01	Check if the network setting for CMC-EIP01 is correct. For the Intranet setting in your company, consult your IT staff. For the Internet setting in your home, refer to the network setting instruction provided by your ISP.
Cannot send e-mail	Incorrect network setting in CMC-EIP01	Check if the network setting for CMC-EIP01 is correct.
	Incorrect mail server setting	Confirm the IP address for SMTP-Server.

8-16 CMC-EC01 -- Communication card, EtherCAT

8-16-1 Features

The EtherCAT of CH2000 currently provides standard control mode of CiA402 Velocity (Index 6060 = 2), but it is non-synchronous control mode. There is no need to turn on the DC (Distribute Clock) function when operating. However, if the DC function is required for using with synchronous products (e.g. ASDA-A2), the CMC-EC01 can still be used normally under this circumstances. The CH2000 supports the EtherCAT function with firmware version 3.05 and above. Please be attention to the firmware you use.

8-16-2 Product Profile

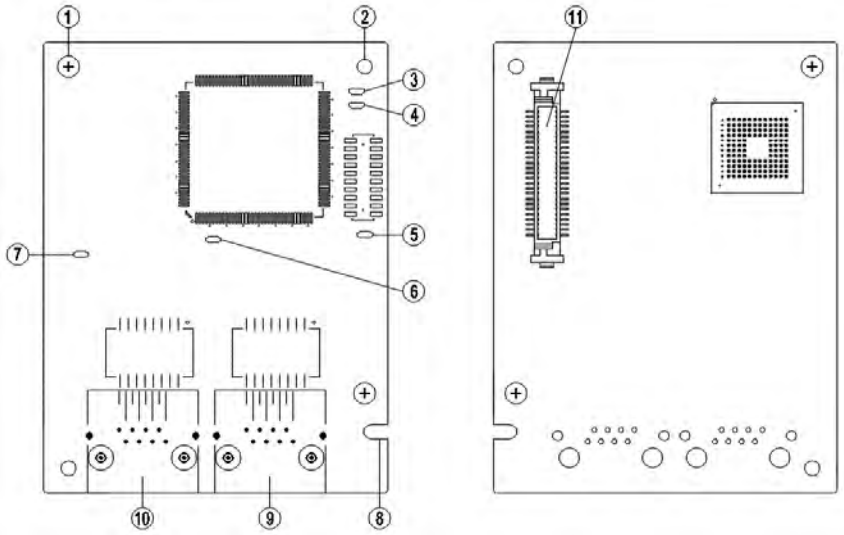

Figure 8-81

[Figure 1]

1. Screw fixing hole
2. Positioning hole
3. RUN indicator
4. ERR indicator
5. POWER indicator
6. OUT LINK indicator
7. IN LINK indicator
8. Fool-proof groove
9. RJ45 connection port
10. RJ45 connection port
11. Control board connection port

8-16-3 Specifications

Network Interface

Interface	RJ45
Number of ports	2 ports
Transmission method	IEEE802.3, IEEE802.3u
Transmission cable	Category 5e shielding 100 M
Transmission speed	10 / 100 Mbps Auto-Defect
Network protocol	EtherCAT

Electrical Specification

Power supply voltage	5 V_{DC}
Power consumption	0.8 W
Insulation voltage	500 V_{DC}
Weight (g)	27

Environment

Noise immunity	ESD (IEC 61800-5-1, IEC 61000-4-2) EFT (IEC 61800-5-1, IEC 61000-4-4) Surge Test (IEC 61800-5-1, IEC 61000-4-5) Conducted Susceptibility Test (IEC 61800-5-1, IEC 61000-4-6)
Operation	-10°C – 15°C (temperature), 90% (humidity)
Storage	-25°C – 70°C (temperature), 95% (humidity)
Vibration / shock immunity	International standard: IEC 61800-5-1, IEC 60068-2-6 / IEC 61800-5-1, IEC 60068-2-27

8-16-4 RJ45 PIN Definition

RJ45	PIN No.	Signal	Definition
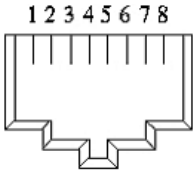 Figure 8-82	1	Tx+	Positive pole for data transmission
	2	Tx-	Negative pole for data transmission
	3	Rx+	Positive pole for data receiving
	4	--	N / C
	5	--	N / C
	6	Rx-	Negative pole for data receiving
	7	--	N / C
	8	--	N / C

8-16-5 Communication Parameters for CH2000 Connected to EtherCAT

When operating CH2000 via CMC-EC01, set the control and operation command as controlled by communication card. When CH2000 is connected to EtherCAT network, set up the communication parameters according to the table below.

Parameters	Set value (Dec)	Explanation
00-20	8	The frequency command is controlled by communication card.
00-21	5	The operation command is controlled by communication card.
09-60	6	Identification: when CMC-EC01 is connected, Pr.09-60 will show value 6 (EtherCAT Slave)
09-61	--	Version of communication card

8-16-6 LED Indicator

LED	Status		Indication
POWER	Green	ON	Power supply in normal status
		OFF	No power supply
LINK	Green	ON	Operate in normal status
		Flashes	Pre-operation (ON / OFF 200 ms)
			Operate in safe mode (ON 200 ms / OFF 1000 ms)
		OFF	Initial state
ERROR	Red	Flashes	Basic configuration error (ON / OFF 200 ms)
			Status switching error (ON 200 ms / OFF 1000 ms)
			Times out (ON 200 ms twice / OFF 1000 ms)
		OFF	No error

LED	Status		Indication
IN LINK	Green	ON	Network connection in normal status
		Flashes	Network in operation
		OFF	Network not connected
OUT LINK	Green	ON	Network connection in normal status
		Flashes	Network in operation
		OFF	Network not connected

8-16-7 Network Connection

Because the packet delivery of EtherCAT has directional characteristics, the connection must be correct. The designed delivery direction of CMC-EC01 is left for IN / right for ON, the correct wiring is as below shown:

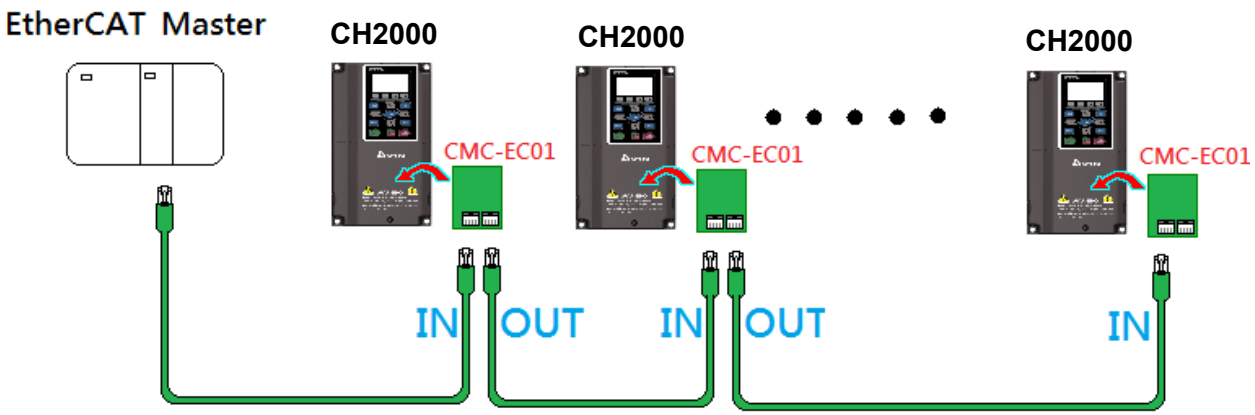

Figure 8-83

When the hardware is installed and power on, check for the display. The current set value of Pr.09-60 will be 6, and shows “EtherCAT” on the display. If the above information does not show on the display, check the version of CH2000 and the connection of the card.

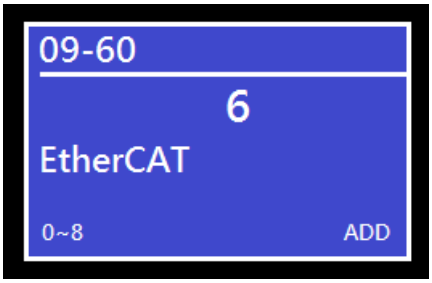

Figure 8-84

8-17 CMC-PN01 -- Communication card, PROFINET

8-17-1 Features

CMC-PN01 connects CH2000 drive to PROFINET to exchange data with the host controller easily. This simple network solution saves cost and time for connection and installation of factory automation. Moreover, its components are compatible with suppliers'.

By installing CMC-PN01 in CH2000 through the main PROFINET device, you can:

1. Control the drive through PROFINET
2. Modify the drive's parameters through PROFINET
3. Monitor the drive's status through PROFINET.

8-17-2 Product profile

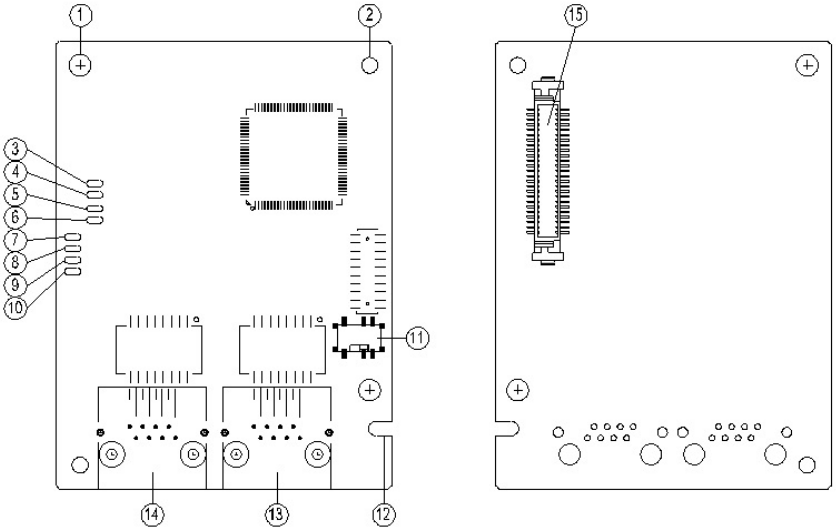

Figure 8-85

1. Screw fixing hole
2. Communication card fixing hole
3. Indicator light: Ready out
4. Indicator light: MT out
5. Indicator light: SD
6. Indicator light: BF out
7. Indicator light: ACT PHY2
8. Indicator light: Link PHY2
9. Indicator light: ACT PHY1
10. Indicator light: Link PHY2
11. ON / OFF switch
12. Fool-proofing slot to the communication card
13. RJ45 port (Port2)
14. RJ45 port (Port1)
15. A port to connect with control board

Label with MAC address

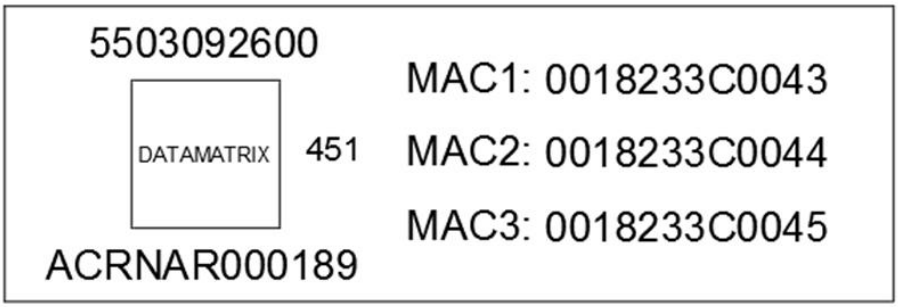

Figure 8-86

Definition	Description
MAC1	Port 1 MAC Address
MAC2	Port 2 MAC Address
MAC3	Interface MAC Address

8-17-3 Specifications

Network interface

Item	Specifications
Interface	RJ45
Number of ports	2 ports
Transmission cable	IEEE 802.3
Transmission rate	Category 5e shielding 100 M
Communication protocol	10/100 Mbps auto-negotiate
Interface	PROFINET

Electrical specification

Item	Specifications
Power supply voltage	5 V_{DC}
Power consumption	0.8 W
Insulation voltage	500 V_{DC}
Weight (g)	27 (g)

Environmental conditions

Item	Specifications
Noise immunity	ESD (IEC 61800-5-1, IEC 6100-4-2) EFT (IEC 61800-5-1, IEC 6100-4-4) Surge Teat (IEC 61800-5-1, IEC 6100-4-5) Conducted Susceptibility Test (IEC 61800-5-1, IEC 6100-4-6)
Operation and storage	-10–50°C (temperature), 90% (humidity)
Vibration & shock resistance	International Standard: IEC 61800-5-1, IEC 60068-2-6 / IEC 61800-5-1, IEC 60068-2-27

8-17-4 Definition of PINs in RJ45 port

RJ45	PIN	Signal	Definition
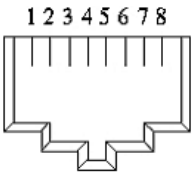 Figure 8-87	1	Tx+	Positive pole for data transmission
	2	Tx-	Negative pole for data transmission
	3	Rx+	Positive pole for receiving data
	4	--	N/C
	5	--	N/C
	6	Rx-	Negative pole for receiving data
	7	--	N/C
	8	--	N/C

8-17-5 To set the communication parameters when CH2000 connects with PROFINET

When you operate CH2000 through CMC-PN01, set up the communication card as the source of CH2000 controls and settings. You need to use the keypad to configure the following parameter addresses to the corresponding values:

Parameters	Setting value	Description
00-20	8	The frequency command is controlled by communication card
00-21	5	The frequency command is controlled by communication card
09-30	1	Use decoding method (60xx or 20xx)
09-60	12	Communication card identification: When CMC-PN01 communication card is connected, the value of this parameter displays “12”.

8-17-6 LED indicator introduction

Name	Indicator status		Indication
Ready out indicator	Yellow LED	Always on	PN Stack starts normally
		Flashing	PN Stack starts normally, and waiting for syncing with MCU
		OFF	PN Stack failed to start
MT out indicator	Green LED	-	-
SD indicator	Red LED	-	-
BF out indicator	Red LED	Always on	Connection with PROFINET Controller is interrupted
		Flashing	Connection is in normal state, but the communication with PROFINET Controller is abnormally
		OFF	Connection with PROFINET Controller is in normal state
ACT PHY1 indicator	Orange LED	Always on	It’s online, and exchanging the data with Master normally
		Flashing	It’s offline, but hand shaking the data with Master
		OFF	Initial state
LINK PHY1 indicator	Green LED	Always on	Internet connection is in normal state
		OFF	Doesn’t connect to network
ACT PHY2 indicator	Orange LED	Always on	It’s online, and exchanging the data with Master normally
		Flashing	It’s offline, but hand shaking the data with Master
		OFF	Initial state
LINK PHY2 indicator	Green LED	Always on	Internet connection is in normal state
		OFF	Doesn’t connect to network

8-17-7 Network connection

The wiring of CMC-PN01 shows as follows:

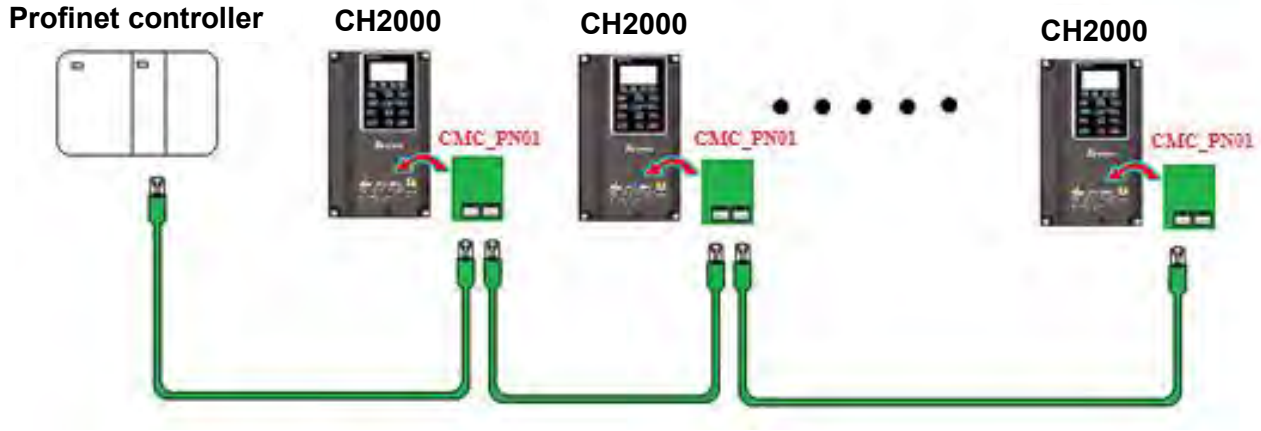

Figure 8-88

When the installation is finished, supply electricity to the drive. The Pr.09-60 of the drive should be able to display “PROFINET” with a current value of 12. If not, make sure your version of the drive is correct (CH2000 needs V2.04 or later versions) and the communication card is correctly connected.

Figure 8-89

8-18 EMC-COP01 -- Communication card, CANopen

8-18-1 Product Profile

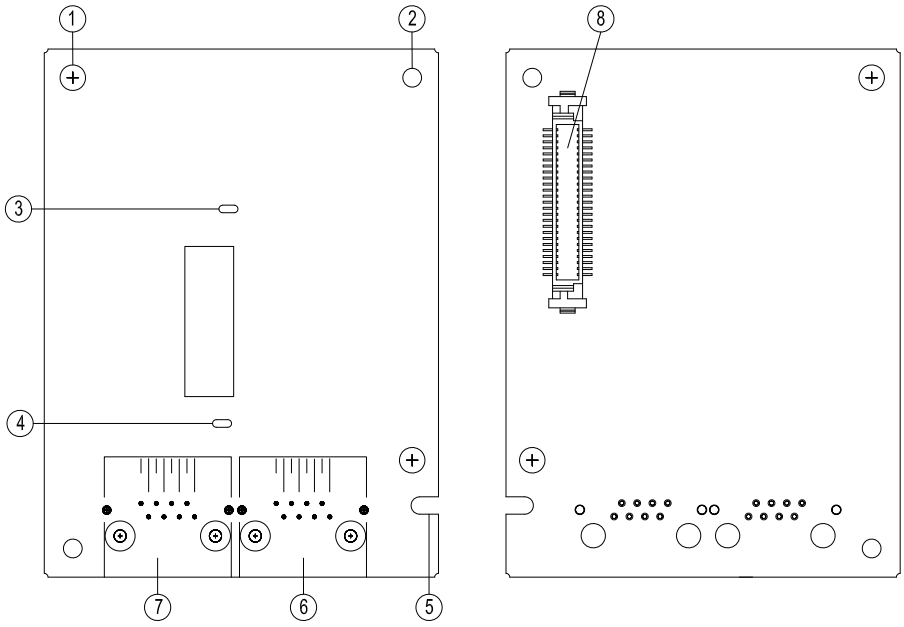

1. Screw fixing hole
2. Communication card fixing hole
3. POWER indicator
4. POWER indicator
5. Fool-proofing slot to the communication card
6. RJ45 port
7. RJ45 port
8. Control board connection port

8-18-2 Terminating Resistor Position

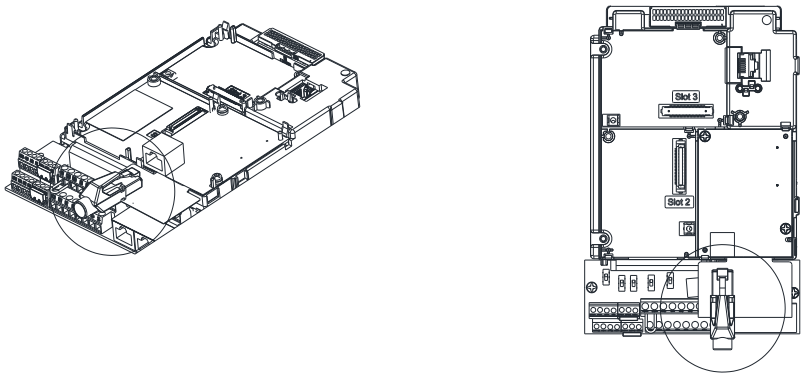

Figure 8-90

8-18-3 RJ45 Pin definition

RS-485 socket
Figure 8-91

Pin	Pin name	Definition
1	CAN_H	CAN_H bus line (dominant high)
2	CAN_L	CAN_L bus line (dominant low)
3	CAN_GND	Ground/0V/V-
7	CAN_GND	Ground/0V/V-

8-18-4 Specifications

Network interface

Interface	RJ-45
Number of Ports	1 Port
Transmission Method	CAN
Transmission Cable	CAN standard cable
Transmission Speed	1 Mbps; 500 Kbps; 250 Kbps; 125 Kbps; 100 Kbps; 50 Kbps
Communication Protocol	CANopen

Electrical specification

Weight	27g
Insulation Voltage	500 V_{DC}
Power Consumption	0.8 W
Power Supply Voltage	5 V_{DC}

Environmental conditions

Noise Immunity	ESD (IEC61800-5-1, IEC61000-4-2) EFT (IEC61800-5-1, IEC61000-4-4) Surge Test (IEC61800-5-1, IEC61000-4-5) Conducted Susceptibility Test (IEC61800-5-1, IEC61000-4-6)
Operation	-10–50°C (temperature), 90% (humidity)
Storage	-25–70°C (temperature), 95% (humidity)
Vibration & Shock Resistance	International Standard: IEC61800-5-1, IEC60068-2-6 / IEC61800-5-1, IEC60068-2-27

8-19 Delta Standard Fieldbus Cables

Delta Cables	Part Number	Description	Length
CANopen Cable / RJ45 extension cable for keypad	UC-CMC003-01A	CANopen cable, RJ45 connector	0.3 m
	UC-CMC005-01A	CANopen cable, RJ45 connector	0.5 m
	UC-CMC010-01A	CANopen cable, RJ45 connector	1 m
	UC-CMC015-01A	CANopen cable, RJ45 connector	1.5 m
	UC-CMC020-01A	CANopen cable, RJ45 connector	2 m
	UC-CMC030-01A	CANopen cable, RJ45 connector	3 m
	UC-CMC050-01A	CANopen cable, RJ45 connector	5 m
	UC-CMC100-01A	CANopen cable, RJ45 connector	10 m
	UC-CMC200-01A	CANopen cable, RJ45 connector	20 m
DeviceNet Cable	UC-DN01Z-01A	DeviceNet cable	305 m
	UC-DN01Z-02A	DeviceNet cable	305 m
EtherNet / EtherCAT Cable	UC-EMC003-02A	Ethernet / EtherCAT cable, Shielding	0.3 m
	UC-EMC005-02A	Ethernet / EtherCAT cable, Shielding	0.5 m
	UC-EMC010-02A	Ethernet / EtherCAT cable, Shielding	1 m
	UC-EMC020-02A	Ethernet / EtherCAT cable, Shielding	2 m
	UC-EMC050-02A	Ethernet / EtherCAT cable, Shielding	5 m
	UC-EMC100-02A	Ethernet / EtherCAT cable, Shielding	10 m
	UC-EMC200-02A	Ethernet / EtherCAT cable, Shielding	20 m
CANopen / DeviceNet TAP	TAP-CN01	1 in 2 out, built-in 121 Ω terminal resistor	1 in 2 out
	TAP-CN02	1 in 4 out, built-in 121 Ω terminal resistor	1 in 4 out
	TAP-CN03	1 in 4 out, RJ45 connector, built-in 121 Ω terminal resistor	1 in 4 out, RJ45
PROFIBUS Cable	UC-PF01Z-01A	PROFIBUS DP cable	305 m

Chapter 9 Specification

9-1 230V Models

9-2 460V Models

9-3 Environment for Operation, Storage and Transportation

9-4 Specification for Operation Temperature and Protection Level

9-5 Derating Curve

9-6 Efficiency Curve

9-1 230V Models

Frame Size			A				B			C		D			E		F
VFD_ _ _CH23A-XX			007	015	022	037	055	075	110	150	185	220	300	370	450	550	750
Output Rating	Super Heavy Duty	Rated Output Capacity (kVA)	2.0	3.2	4.4	6.8	10	13	20	26	30	36	48	58	72	86	102
		Rated Output Current (A)	5	8	11	17	25	33	49	65	75	90	120	146	180	215	255
		Applicable Motor Output (kW)	0.75	1.5	2.2	3.7	5.5	7.5	11	15	18.5	22	30	37	45	55	75
		Applicable Motor Output (HP)	1	2	3	5	7.5	10	15	20	25	30	40	50	60	75	100
		Overload Capacity	150% of rated output current: 1 minute for every 5 minutes; 200% of rated output current: 3 seconds for every 30 seconds														
		Max. Output Frequency (Hz)	0.00–599.00														
		Carrier Frequency (kHz)	5–15														
Input Rating		Input Current (A) Super Heavy Duty	6.4	12	16	20	28	36	52	72	83	99	124	143	171	206	245
		Rated Voltage / Frequency	Three-phase 200–240 V_{AC} (-15 – +10%), 50/60 Hz														
		Operating Voltage Range	170–265 V_{AC}														
		Frequency Tolerance	47–63 Hz														
		Power Supply Capacity (kVA)	2.1	3.3	4.6	7.1	10.4	13.7	20.4	27.0	31.2	37.4	43.6	60.7	74.8	89.4	106.0
Efficiency (%)			97.8												98.2		
Displacement Power Factor (cosθ)			> 0.98														
Weight (kg)			2.6 ± 0.3				5.4 ± 1			9.8 ± 1.5		38.5 ± 1.5			64.8 ± 1.5		86.5 ± 1.5
Cooling Method			Natural cooling	Fan cooling													
Braking Chopper			Frame A–C: Built-in									Frame D–F: Optional					
DC Choke			Frame A–C: Optional									Frame D–F: Built-in					
EMC Filter			Optional														

Table 9-1

NOTE:

1. The carrier frequency is default. Increasing the carrier frequency requires a reduction in current. Refer to Section 9-5 Derating Curve for details.
2. The AC motor drive should operate in derating current when its control mode is set to FOC sensorless, TQC+PG, TQC sensorless, PM+PG or PM sensorless. Refer to Pr.06-55 for more information.
3. The rated input current will be affected by not only power transformer and the connection of the reactors on input side, but also fluctuates with the impedance of power side.
4. Rated output capacity is calculated by 460 V_{AC}, it is as a reference for the mains power drive capacity selection.

9-2 460V Models

Frame Size			A					B			C		
VFD_ _ _CH43A-XX VFD_ _ _CH4EA-XX			007	015	022	037	055	075	110	150	185	220	300
Output Rating	Super Heavy Duty	Rated Output Capacity (kVA)	2.4	3.2	4.8	7.2	9.6	14	19	25	30	36	48
		Rated Output Current (A)	3	4	6	9	12	18	24	32	38	45	60
		Applicable Motor Output (kW)	0.75	1.5	2.2	3.7	5.5	7.5	11	15	18.5	22	30
		Applicable Motor Output (HP)	1	2	3	5	7.5	10	15	20	25	30	40
		Overload Capacity	150% of rated output current: 1 minute for every 5 minutes; 200% of rated output current: 3 seconds for every 30 seconds										
		Max. Output Frequency (Hz)	0.00–599.00										
		Carrier Frequency (kHz)	5–15										
Input Rating		Input Current (A) Super Heavy Duty	4.3	5.9	8.7	14	17	20	26	35	40	47	63
		Rated Voltage / Frequency	Three-phase 380–480 V_{AC} (-15 – +10%), 50/60 Hz										
		Operating Voltage Range	323–528 V_{AC}										
		Frequency Tolerance	47–63 Hz										
		Power Supply Capacity (kVA)	2.5	3.3	5.0	7.5	10.0	15.0	20.0	26.6	31.6	37.4	49.9
Efficiency (%)			97.8										
Displacement Power Factor (cosθ)			>0.98										
Weight (kg)			2.6 ± 0.3					5.4 ± 1			9.8 ± 2		
Cooling Method			Natural cooling	Fan cooling									
Braking Chopper			Frame A–C: Built-in										
DC Choke			Frame A–C: Optional										
EMC Filter			Frame A–C VFD_ _ _ _CH4EA-21: Built-in Frame A–C VFD_ _ _ _CH43A-21: Optional										

Table 9-2

NOTE:

1. The carrier frequency is default. Increasing the carrier frequency requires a reduction in current. Refer to Section 9-5 Derating Curve for details.
2. Select the AC motor drive with capacity one grade larger for the impact load application.
3. Rated output capacity is calculated by 460 V_{AC}, it is as a reference for the mains power drive capacity selection.

460V Models

Frame Size			D0	D			E		F	G			H			
VFD_ _ _ _CH43X-XX			370	450	550	750	900	1100	1320	1600	1850	2200	2800	3150	3550	4500
Output Rating	Super Heavy Duty	Rated Output Capacity (kVA)	58	73	88	120	143	175	199	247	295	359	438	491	544	690
		Rated Output Current (A)	73	91	110	150	180	220	250	310	370	450	550	616	683	866
		Applicable Motor Output (kW)	37	45	55	75	90	110	132	160	185	220	280	315	355	450
		Applicable Motor Output (HP)	50	60	75	100	125	150	175	215	250	300	375	420	475	600
		Overload Capacity	150% of rated output current: 1 minute for every 5 minutes; 200% of rated output current: 3 seconds for every 30 seconds													
		Max. Output Frequency (Hz)	0.00–599.00													
		Carrier Frequency (kHz)	5–15 (Default: 6)				4–10 (Default: 4)									
Input Rating		Input Current (A) Super Heavy Duty	74	101	114	157	167	207	240	300	380	400	494	555	625	866
		Rated Voltage / Frequency	Three-phase 380–480 V_{AC} (-15 – +10%), 50/60 Hz													
		Operating Voltage Range	323–528 V_{AC}													
		Frequency Tolerance	47–63 Hz													
		Power Supply Capacity (kVA)	60.7	75.7	91.4	124.7	149.6	182.9	207.8	257.7	307.6	365.8	457.2	512.1	567.8	720.0
Efficiency (%)			97.8				98.2									
Displacement Power Factor (cosθ)			>0.98													
Weight (kg)			38.5 ± 1.5				64.8 ± 1.5		86.5 ± 1.5	134 ± 4			228			
			36 ± 1.5*4		46 ± 1.5*4											
Cooling Method			Fan cooling													
Braking Chopper			Frame D / D0: Optional VFD_ _ _CH43L-00: Built-in				Frame E and above: Optional									
DC Choke			Frame D and above: Built-in Model VFD370CH43L-00 has no built-tin DC choke.													
EMC Filter			Frame D0 and above: External optional													

Table 9-3

NOTE:

1. The carrier frequency is default. Increasing the carrier frequency requires a reduction in current. Refer to Section 9-5 Derating Curve for details.
2. Select the AC motor drive with capacity one grade larger for the impact load application.
3. Rated output capacity is calculated by 460 V_{AC}, it is as a reference for the mains power drive capacity selection.
4. * The weight for models VFD_ _ _CH43L-00.

General Specifications

Control Characteristics	Control Mode	1: V/F, 2: SVC, 3: VF+PG, 4: FOC+PG, 5: TQC+PG,
	Starting Torque	Reach up to 200% or above at 0.5 Hz. Under FOC+PG mode, starting torque can reach 200% at 0 Hz.
	V/F Curve	4 point adjustable V/F curve and square curve
	Speed Response Ability	5Hz (vector control can reach up to 40 Hz)
	Torque Limit	Max. 220% of torque current
	Torque Accuracy	±5%
	Max. Output Frequency (Hz)*1	0.00–599.00 Hz
	Frequency Output Accuracy	Digital command: ±0.01% (-10 – +40°C) of max. output frequency (Pr.01-00) Analog command: ±0.1% (25±10°C) of max. output frequency (Pr.01-00)
	Output Frequency Resolution	Digital command: 0.1 Hz Analog command: 0.05% × max. output frequency (Pr.01-00) (±11 bit)
	Overload Tolerance	Rated output current is 150 % for 60 seconds；200% for 3 seconds
	Frequency Setting Signal	+10 –- +10 V, 0– +10 V, 4–20 mA, 0–20 mA, Pulse input
	Accel./decel. Time	0.00–600.00 / 0.0–6000.0 seconds
	Main Control Function	Torque control, Speed / torque control switching, Feed forward control, Zero-servo control, Momentary power loss ride thru, Speed search, Over-torque detection, Torque limit, 16-step speed (max), Accel. / decel. time switch, S-curve accel. / decel., Three-wire sequence, Auto-Tuning (rotational, stationary), Dwell, Slip compensation, Torque compensation, JOG frequency, Frequency upper / lower limit settings, DC injection braking at start / stop, High slip braking, PID control (with sleep function), Energy saving control, Modbus communication (RS-485 RJ45, max. 115.2 Kbps), Fault restart, Parameter copy
	Fan Control	230V model: VFD150CH23A-21(include) and series above: PMW control; VFD110CH23A-21(include) and series below: ON / OFF switch control 460V model: VFD185CH43A/4EA-21(include) and series above: PMW control; VFD150CH43A/4EA-21(include) and series below: ON / OFF switch control
Protection Characteristics	Motor Protection	Electronic thermal relay protection
	Over-current Protection	Output over-current protection 230V / 460V models: Over-current protection for 300% rated current Current clamp “Super heavy duty: 220%” Braking over-current protection (applicable models: VFD370CH43L-00; VFD450CH43L-00; VFD550CH43L-00; VFD750CH43L-00) Over-current protection for 150% rated current
	Over-voltage Protection	230V models: drive stops running when DC bus voltage exceeds 410V 460 V models: drive stops running when DC bus voltage exceeds 820V
	Over-temperature Protection	Temperature sensor (applicable for all models): Braking chopper (applicable models: VFD370CH43L-00; VFD450CH43L-00; VFD550CH43L-00; VFD750CH43L-00)
	Stall Prevention	Stall prevention during acceleration, deceleration and running independently

	Restart After Instantaneous Power Failure	Parameter setting up to 20 seconds
	Grounding Leakage Current Protection	Leakage current is higher than 50% of rated current of the AC motor drive
	Short-circuit Current Rating (SCCR)	Per UL 508C, the drive is suitable for using on a circuit capable of delivering not more than 100 kA symmetrical amperes (rms) when protected by fuses given in the fuse table.
Certifications*2		CE, GB/T12668-2
STO*2		Safe Torque Off (STO per EN / IEC61800-5-2) TUV Rheinland certification IEC62061/IEC61508, SIL CL2 EN ISO13849-1, Cat.3/PL d

Table 9-4

NOTE:

1. The setting range of the maximum output frequency varies from carrier and control modes. Refer to Pr.01-00 and Pr.06-55 for more information.
2. The following models have no UL and STO certification:
   VFD3150CH43A-00, VFD3150CH43C-21, VFD3550CH43A-00, VFD3550CH43C-21, VFD4500CH43A-00, VFD4500CH43C-21, VFD370CH43L-00, VFD450CH43L-00, VFD550CH43L-00, VFD750CH43L-00

9-3 Environment for Operation, Storage and Transportation

DO NOT expose the AC motor drive in the bad environment, such as dust, direct sunlight, corrosive / inflammable gasses, humidity, liquid and vibration environment. The salt in the air must be less than 0.01 mg/cm^2 every year.			
Environment	Installation Location	IEC60364-1 / IEC60664-1 Pollution degree 2, Indoor use only	
	Surrounding Temperature (°C)	Storage / Transportation	-25 – +70
		Non-condensation, non-frozen	
	Rated Humidity (%)	Operation	Max. 95
		Storage / Transportation	Max. 95
		No condense water	
	Air Pressure (kPa)	Operation/ Storage	86–106
		Transportation	70–106
	Pollution Level	IEC 60721-3-3	
		Operation	Class 3C3; Class 3S2
		Storage	Class 1C2; Class 1S2
		Transportation	Class 2C2; Class 2S2
		If you use the AC motor drive under harsh environment with high level of contamination (e.g. dew, water, dust), make sure it is installed in an environment qualified for IP54 such as in a cabinet.	
	Altitude	Operation	If the AC motor drive is installed at an altitude 0–1000 m, follow normal operation restriction. For altitude of 1000–2000 m, decrease the drive's rated current by 1% or lower the temperature by 0.5°C for every 100 m increase in altitude. The maximum altitude for Corner Grounded is 2000 m. If installing at an altitude higher than 2000 m is required, contact Delta for more information.
Package Drop	Storage	ISTA procedure 1A (according to weight) IEC60068-2-31	
	Transportation		
Vibration	1.0 mm, peak to peak value range from 2 Hz to 13.2 Hz; 0.7–1.0 G range from 13.2 Hz to 55 Hz; 1.0G range from 55 Hz to 512 Hz. Comply with IEC 60068-2-6		
Impact	IEC / EN 60068-2-27		
Operation Position	Max. allowed offset angle ±10° (under normal installation position)	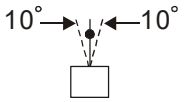	

Table 9-5

9-4 Specification for Operation Temperature and Protection Level

Model	Frame	Top cover	Conduit Box	Protection Level	Operation Temperature
VFDxxxxCHxxx-21	Frame A–C 230V: 0.75–18.5 kW 460V: 0.75–30 kW	Top cover removed	Standard conduit plate	IP20 / UL Open Type	-10–50°C
		Standard with top cover		IP20 / UL Type1 / NEMA1	-10–40°C
	Frame D–H 230V: ≥ 22 kW 460V: ≥ 37 kW	N/A	Standard conduit box	IP20 / UL Type1 / NEMA1	-10–40°C
VFDxxxxCHxxx-00	Frame D–H 230V: ≥ 22 kW 460V: ≥ 37 kW	N/A	No conduit box	IP00 IP20 / UL Open Type 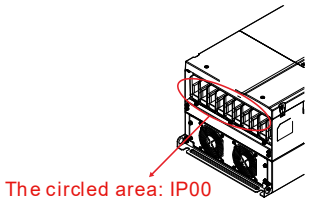 Figure 9-1	-10–50°C
VFDxxxCHxxL-00	Frame D0-3 460V: 37 kW	N/A	No conduit box	IP20 / NEMA1	-10–50°C
	Frame D3 460V: 45, 55, 75 kW	N/A	No conduit box	IP00 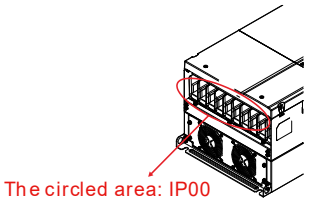 Figure 9-2	-10–50°C

Table 9-6

9-5 Derating Curve

Protection Level	Operating Environment
UL Type I / IP20	If the AC motor drive operates at the rated current, the ambient temperature needs to be between -10 – +40°C. If the temperature is above 40°C, decrease 2% of the rated current for every 1°C increase in temperature. The maximum allowable temperature is 60°C.
UL Open Type / IP20	If the AC motor drive operates at the rated current, the ambient temperature needs to be between -10 – +50°C. If the temperature is above 50°C, decrease 2% of the rated current for every 1°C increase in temperature. The maximum allowable temperature is 60°C.
High Altitude	If the AC motor drive is installed at an altitude of 0–1000 m, follow normal operation restrictions. For altitudes of 1000–2000 m, decrease the drive's rated current by 1% or lower the temperature by 0.5°C for every 100 m increase in altitude. The maximum altitude for corner grounding is 2000 m. If installing at an altitude higher than 2000 m is required, contact Delta for more information.

Table 9-7

Ambient Temperature Derating Curve

230V / 460V

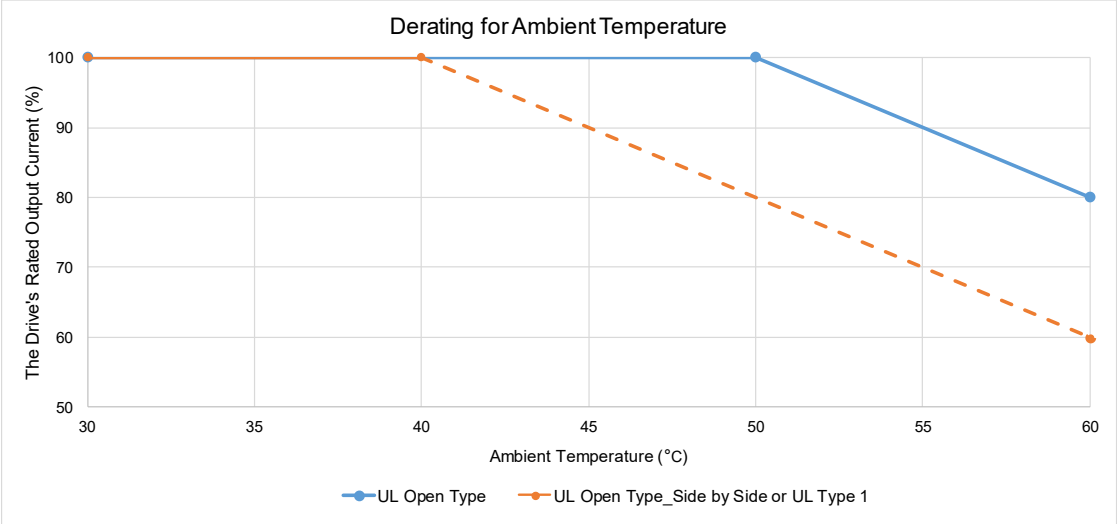

Figure 9-3

UL Open Type:

The rated output current derating (%) when carrier frequency is the default value:

Ambient Temp. (Ta) / 100% Load / Carrier Frequency (kHz)	30°C	50°C	60°C
Default	100	100	80

Table 9-8

UL Open Type_Side by Side or UL Type 1:

The rated output current derating (%) when carrier frequency is the default value

Ambient Temp. (Ta) / 100% Load / Carrier Frequency (kHz)	30°C	40°C	60°C
Default	100	100	60

Table 9-9

Altitude Derating Curve

Condition	Operating Environment
High Altitude	If the AC motor drive is installed at an altitude of 0–1000 m, follow normal operation restrictions. For altitudes of 1000–2000 m, decrease the drive's rated current by 1% or lower the temperature by 0.5°C for every 100 m increase in altitude. The maximum altitude for corner grounding is 2000 m. If installing at an altitude higher than 2000 m is required, contact Delta for more information.

Table 9-10

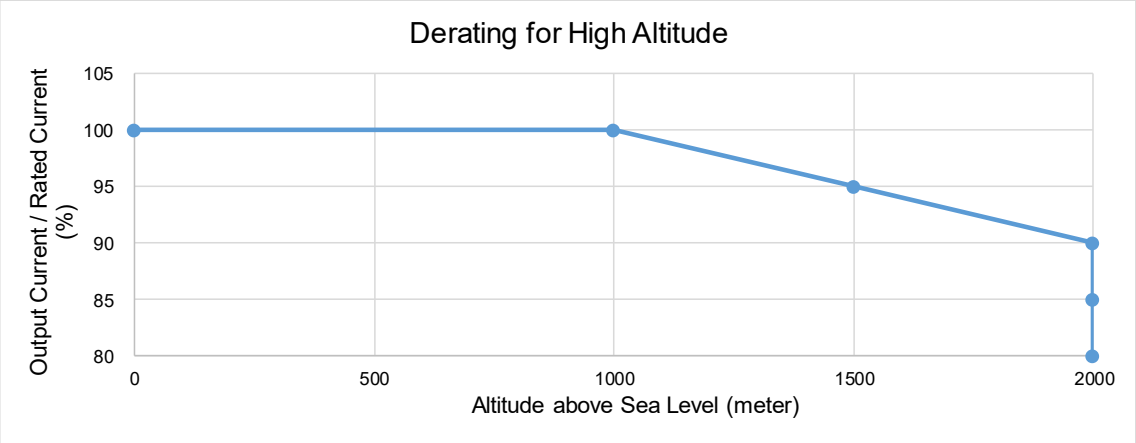

Figure 9-4

The rated output current derating (%) for different altitudes above sea level:

Altitude above Sea Level (meter)	0	1000	1500	2000
Output Current / Rated Current (%)	100	100	95	90

Table 9-11

Carrier Frequency Derating Curve

- 230V / 460V Normal Control

  Pr.00-11 = 0 (IMVF)
  = 1 (IMVFPG)
  = 2 (IM SVC, Pr.05-33 = 0)
  = 3 (IMFOCPG)

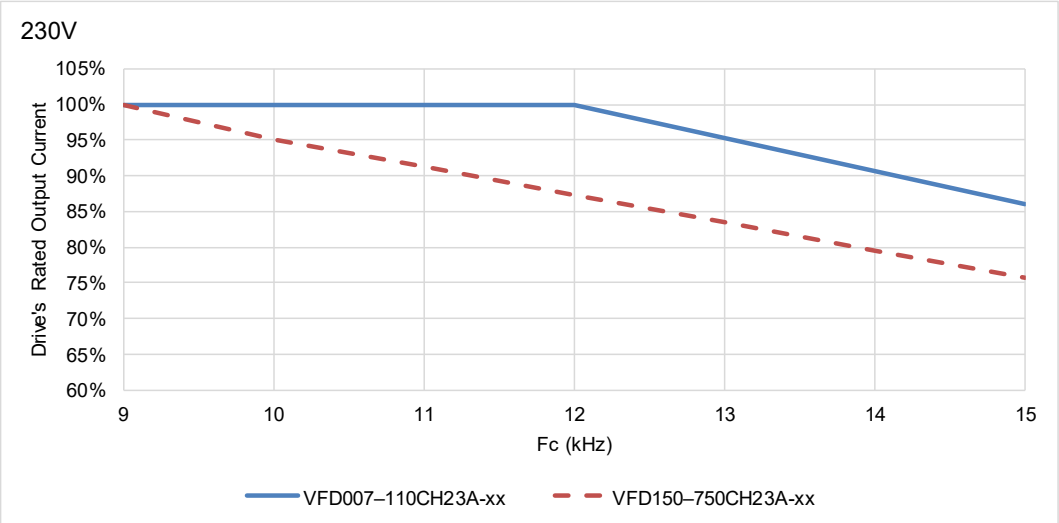

Figure 9-5

The rated output current derating (%) of 230V models in normal control mode for different carrier frequencies:

Model \ Fc (kHz)	9	10	11	12	13	14	15
VFD007–110CH23A-xx	100	100	100	100	95	91	86
VFD150–750CH23A-xx	100	95	91	87	83	80	76

Table 9-12

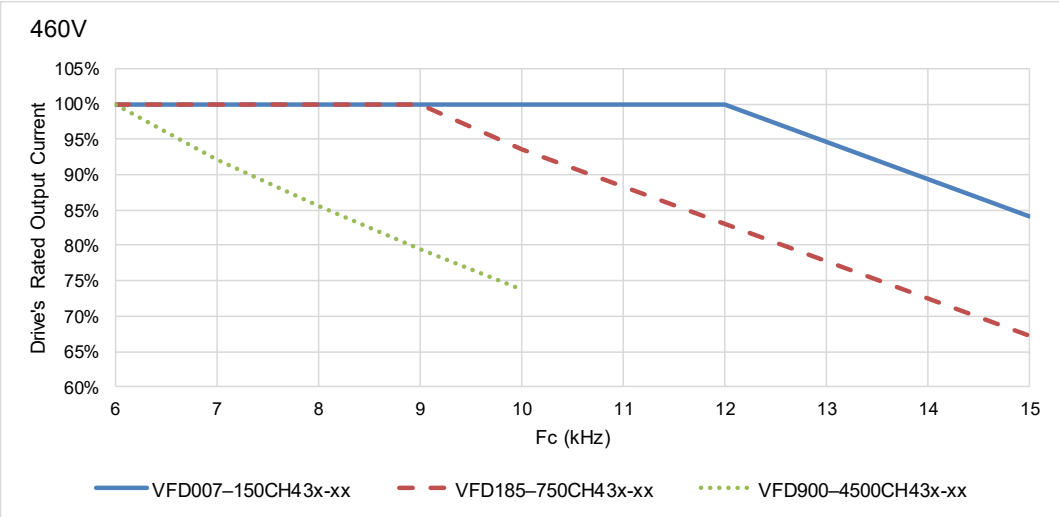

Figure 9-6

The rated output current (%) of 460V models in normal control mode for different carrier frequencies:

Model \ Fc (kHz)	6	7	8	9	10	11	12	13	14	15
VFD007–150CH43x-xx	100	100	100	100	100	100	100	95	89	84
VFD185–750CH43x-xx	100	100	100	100	94	88	83	78	72	67
VFD900–4500CH43x-xx	100	92	85	79	74	-	-	-	-	-

Table 9-13

- 230V / 460V Advanced Control
  Pr.00-11 = 2 (PM SVC, Pr.05-33 = 1、2)
  = 4 (PMFOCPG)
  = 5 (IMFOC Sensorless)
  = 6 (PM Sensorless)
  = 7 (IPM Sensorless)

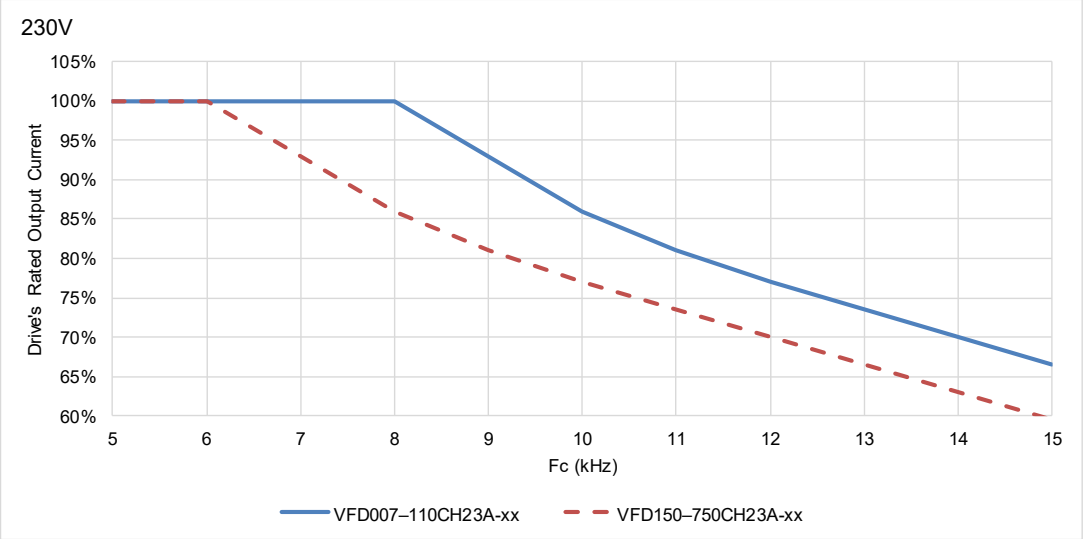

Figure 9-7

The rated output current (%) of 230V models in advanced control mode for different carrier frequencies:

Model \ Fc (kHz)	5	6	7	8	9	10	11	12	13	14	15
VFD007–110CH23A-xx	100	100	100	100	93	86	81	77	74	70	67
VFD150–750CH23A-xx	100	100	93	86	81	77	74	70	67	63	60

Table 9-14

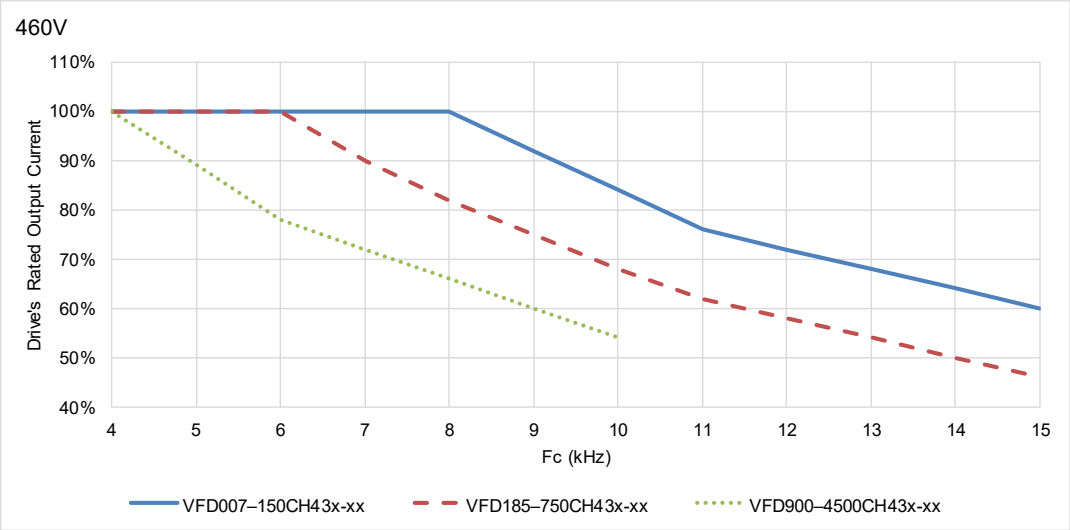

Figure 9-8

The rated output current (%) of 460V models in advanced control for different carrier frequencies:

Model \ Fc (kHz)	4	5	6	7	8	9	10	11	12	13	14	15
VFD007–150CH43x-xx	100	100	100	100	100	92	84	76	72	68	64	60
VFD185–750CH43x-xx	100	100	100	90	82	75	68	62	58	54	50	46
VFD900–4500CH43x-xx	100	89	78	72	66	60	54	-	-	-	-	-

Table 9-15

9-6 Efficiency Curve

- Models:
  VFD007–370CH23A-xx
  VFD007–750CH43A-xx

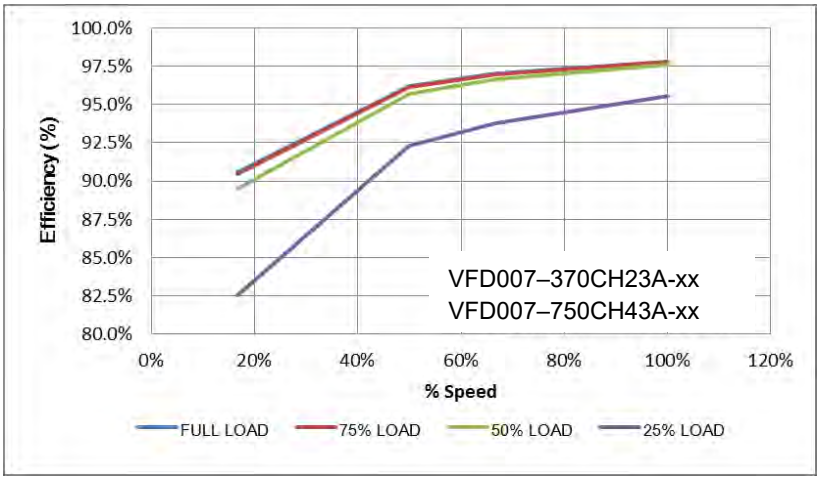

Figure 9-9

Efficiency (%) under different loads:

Speed (%) / Load (%)	16.7	50	66.7	100
100% Load	90.6	96.2	97.0	97.8
75% Load	90.4	96.1	96.9	97.8
50% Load	89.5	95.7	96.6	97.6
25% Load	82.5	92.3	93.8	95.5

Table 9-16

- Models:
  VFD450–750CH23A-xx
  VFD900–4500CH43x-xx

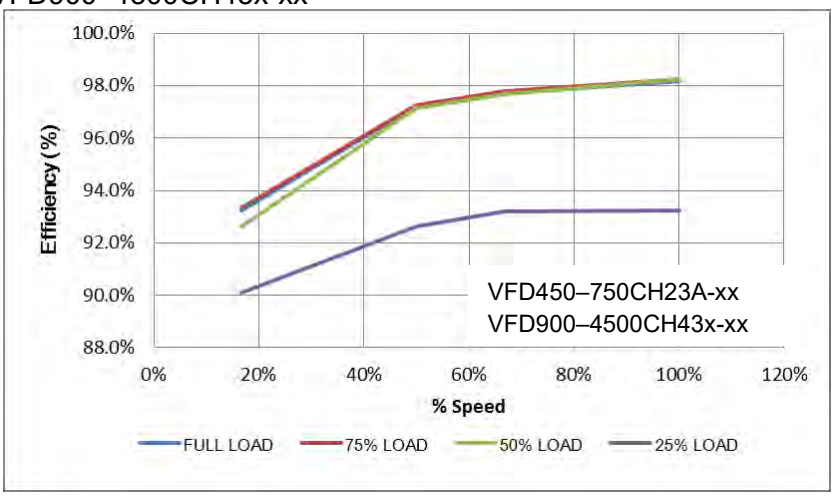

Figure 9-10

Efficient (%) under different loads:

Speed (%) / Load (%)	16.7	50	66.7	100
100% Load	93.4	97.3	97.8	98.3
75% Load	93.4	97.3	97.8	98.3
50% Load	92.6	97.1	97.7	98.2
25% Load	90.1	92.6	93.2	93.2

Table 9-17

[This page intentionally left blank]

Chapter 10 Digital Keypad

10-1 Descriptions of Digital Keypad

10-2 Function of Digital Keypad KPC-CC01

10-3 TPEditor Installation Instruction

10-4 Digital Keypad KPC-CC01 Fault Codes and Descriptions

10-5 Unsupported Functions when Using TPEditor with the KPC-CC01

10-1 Descriptions of Digital Keypad

KPC-CC01

Communication Interface:
RJ45 (socket), RS-485 interface

Communication Protocol:
RTU19200, 8, N, 2

Installation Method

1. The embedded type can be installed flat on the surface of the control box. The front cover is waterproof.
2. Buy a MKC-KPPK model for wall mounting or embedded mounting. Its protection level is IP66.
3. The maximum RJ45 extension lead is 5 m (16 ft).
4. This keypad can only be used on Delta's motor drive C2000 series, CH2000, CP2000 and CFP2000.

Keypad Function Descriptions

Key	Descriptions
RUN	Start Operation Key 1. Only valid when the source of operation command is the keypad. 2. Operates the AC motor drive by the function setting. The RUN LED will be ON. 3. Can be pressed repeatedly at the stop process.
STOP RESET	Stop Command Key. 1. This key has the highest priority when the command is from the keypad. 2. When it receives the STOP command, regardless of whether the AC motor drive is in operation or stop status, the AC motor drive executes the "STOP" command. 3. Use the STOP/RESET key to reset the drive after a fault occurs. 4. If you cannot reset after the error: a. The condition which triggers the fault is not cleared. After you clear the condition, you can then reset the fault. b. The drive is in fault status when powered on. After you clear the condition, restart and then you can reset the fault.
FWD REV	Operation Direction Key 1. Only controls the operation direction, NOT the drive activation. FWD: forward, REV: reverse. 2. Refer to the LED descriptions for more details.
ENTER	ENTER Key Goes to the next menu level. If at the last level, press ENTER to execute the command.
ESC	ESC Key Leaves the current menu and returns to the previous menu; also functions as a return key or cancel key in a sub-menu.
MENU	Returns to the main menu. Menu commands: 1. Parameter Setup 2. Quick Start 3. Application Selection List 4. Changed List 5. Copy Parameter 6. Fault Record 7. Language Setup 8. Time Setup 9. Keypad Locked 10. PLC Function 11. Copy PLC 12. Display Setup 13. Start-up Menu 14. Main Page 15. PC Link 16. Start Wizard

Key	Descriptions
< > ^ v	Direction: Left / Right / Up / Down 1. In the numeric value setting mode, moves the cursor and changes the numeric value. 2. In the menu/text selection mode, selects an item.
F1 F2 F3 F4	Function Key 1. The functions keys have defaults and can also be user-defined. The defaults for F1 and F4 work with the function list below. For example, F1 is the JOG function, and F4 is a speed setting key for adding / deleting user-defined parameters. 2. Other functions must be defined using TPEditor first. (Download TPEditor software at Delta website, select TPEditor version 1.60 or above. Refer to the installation instruction for TPEditor in Section 10-3.)
HAND	HAND Key 1. Use this key to select HAND mode. In this mode, the drive's parameter settings for frequency command source is Pr.00-30, and that for operation command source is Pr.00-31. 2. Press the HAND key at STOP, then the setting switches to the HAND frequency source and HAND operation source. 3. Press HAND key at RUN, and it stops the AC motor drive first (displays AHSP warning), and switches to HAND frequency source and HAND operation source. 4. Successful mode switching for the KPC-CC01 displays HAND mode on the screen.
AUTO	AUTO Key 1. The default of the drive is AUTO mode. 2. Use this key to select AUTO mode. In this mode, the drive's parameter settings for frequency command source is Pr.00-20, and that for operation command is Pr.00-21. 3. Press the AUTO key at STOP, then the setting switches to the AUTO frequency source and AUTO operation source. 4. Press AUTO key at RUN, and it stops the AC motor drive first (displays AHSP warning), and switches to AUTO frequency source and AUTO operation source. 5. Successful mode switching for the KPC-CC01 displays AUTO mode on the screen.

NOTE: The defaults for the frequency command and operation command source of HAND / AUTO mode are both from the keypad.

LED Function Descriptions

LED	Descriptions
STOP RESET	Steady ON: STOP indicator for the AC motor drive. Blinking: the drive is in standby. Steady OFF: the drive does not execute the STOP command.
FWD REV	Operation Direction LED 1. Green light: the drive is running forward. 2. Red light: the drive is running backward. 3. Flashing light: the drive is changing direction. Operation Direction LED under Torque Mode 1. Green light is ON: when the torque command ≥ 0, and the motor is running forward. 2. Red light is ON: when the torque command < 0, and the motor is running backward. 3. Flashing light: when the torque command < 0, and the motor is running forward.

<table>
<tr><th>LED</th><th>Descriptions</th></tr>
<tr><td>CANopen–RUN</td><td>RUN LED:
<table>
<tr><th>LED Status</th><th>Condition / State</th></tr>
<tr><td>OFF</td><td>CANopen at initial state
No LED</td></tr>
<tr><td>Blinking</td><td>CANopen at pre-operation state
 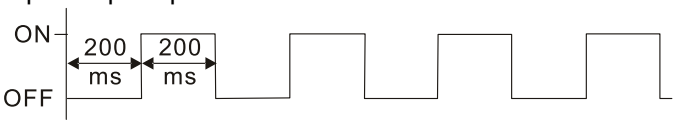
</td></tr>
<tr><td>Single Flash</td><td>CANopen at stopped state
 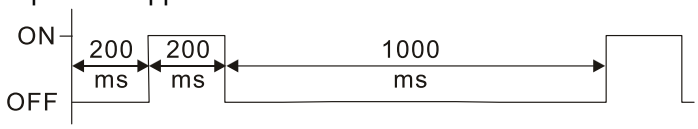
</td></tr>
<tr><td>ON</td><td>CANopen at operation status
</td></tr>
</table></td></tr>
<tr><td>CANopen–ERR</td><td>ERR LED:
<table>
<tr><th>LED Status</th><th>Condition / State</th></tr>
<tr><td>OFF</td><td>No Error</td></tr>
<tr><td>Single Flash</td><td>At least one packet of CANopen is in failure
 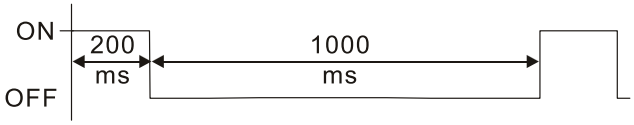
</td></tr>
<tr><td>Double Flash</td><td>Node guarding failure or heartbeat message failure
 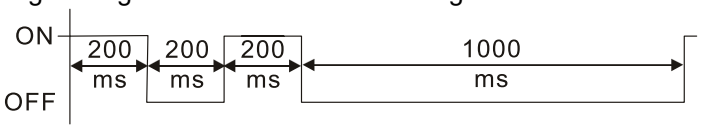
</td></tr>
<tr><td>Triple Flash</td><td>Synchronization failure
 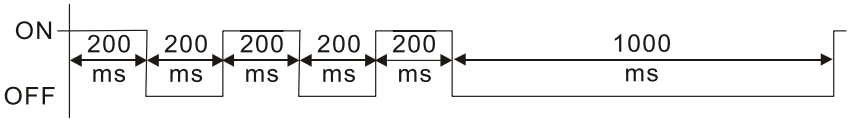
</td></tr>
<tr><td>ON</td><td>Bus off
</td></tr>
</table></td></tr>
</table>

10-2 Function of Digital Keypad KPC-CC01

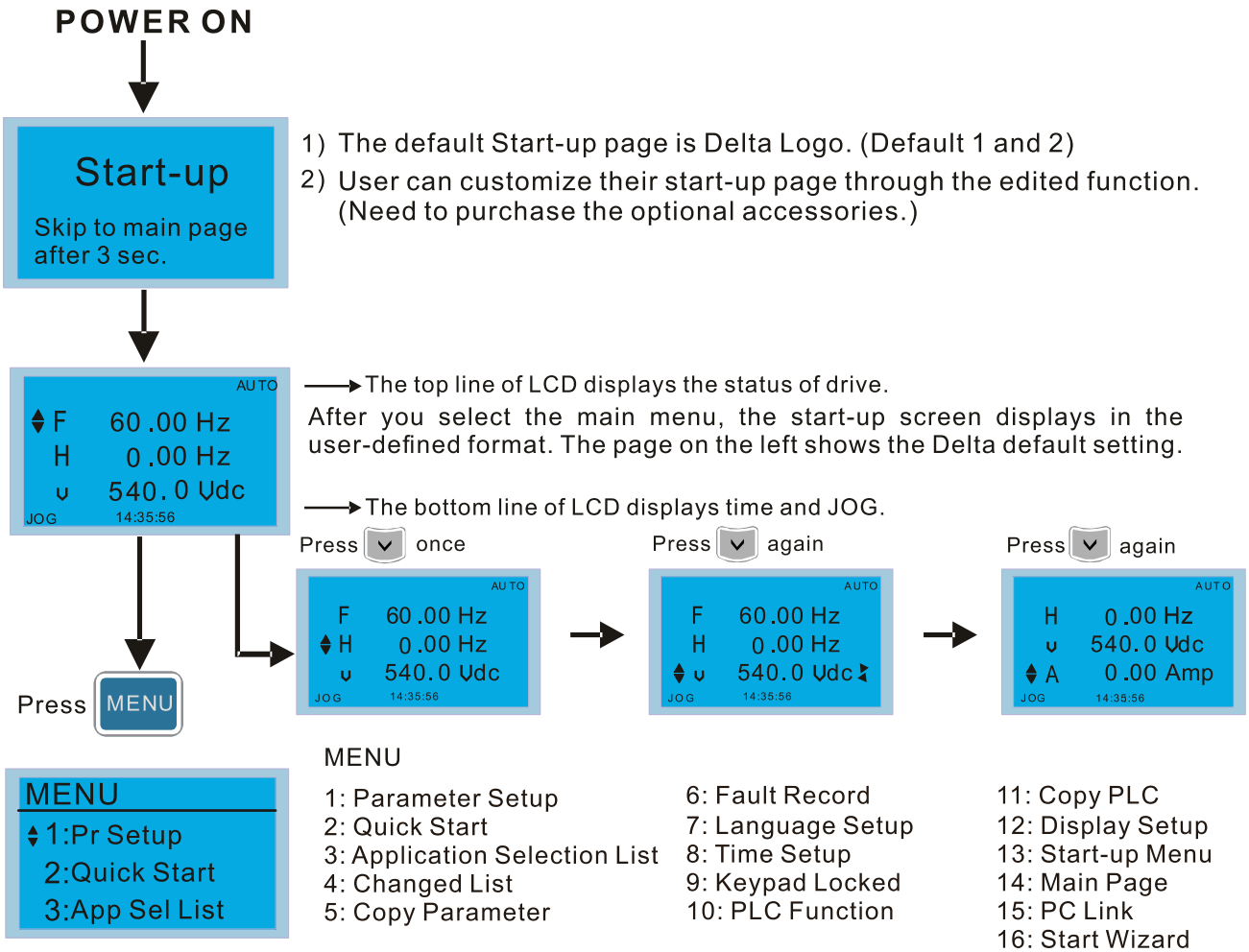

MENU

1: Parameter Setup
2: Quick Start
3: Application Selection List
4: Changed List
5: Copy Parameter
6: Fault Record
7: Language Setup
8: Time Setup
9: Keypad Locked
10: PLC Function
11: Copy PLC
12: Display Setup
13: Start-up Menu
14: Main Page
15: PC Link
16: Start Wizard

NOTE:

1. Start-up screen can only display pictures, not animation.
2. When powered ON, it displays the start-up screen then the main screen. The main screen displays Delta's default setting F/H/A/U. You can set the display order with Pr.00-03 (Start-up display). When you select the U screen, use the left / right keys to switch between the items, and set the display order for the U screen with Pr.00-04 (User display).

Display Icons

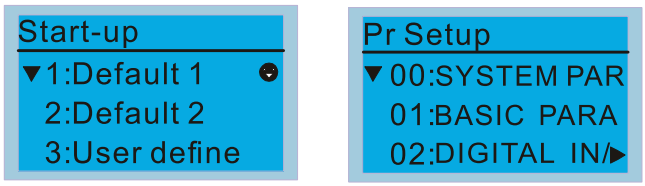

: present setting

▼ : Scroll down the page for more options

Press for more options

▶ : show complete sentence

Press for complete information

Display Items

MENU

1: Parameter Setup
2: Quick Start
3: Application Selection List
4: Changed List
5: Copy Parameter
6: Fault Record
7: Language Setup
8: Time Setup
9: Keypad Locked
10: PLC Function
11: Copy PLC
12: Display Setup
13: Start-up Menu
14: Main Page
15: PC Link
16: Start Wizard

1. Parameter Setup

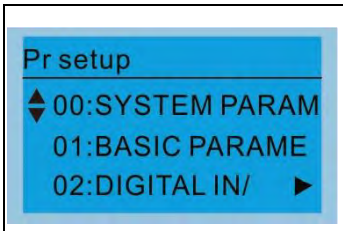

Press ENTER to select.

Press UP / DOWN to select the parameter group.

Once you select a parameter group, press ENTER to go into that group.

Example: Setup source for the master frequency command.

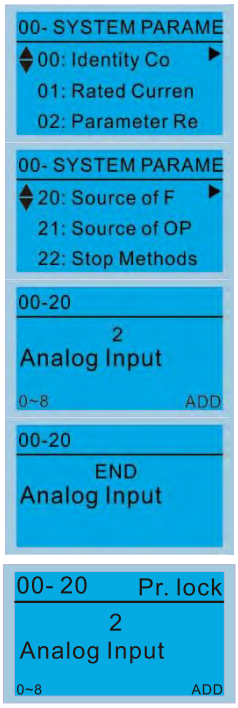

In the Group 00 Motor Drive Parameter, use the Up/Down keys to select parameter 20: Auto Frequency Command.

Press ENTER to go to this parameter's setting menu.

Use the Up/Down keys to choose a setting. For example: choose 2 Analogue Input, and then press ENTER key.

After you press ENTER, END is displayed which means that the parameter setting is done.

NOTE: When parameter lock / password protection function is enabled, it displays "Pr. lock" on the upper right corner of the keypad. The parameter cannot be written or is protected by the password under these circumstances.

2. Quick Start

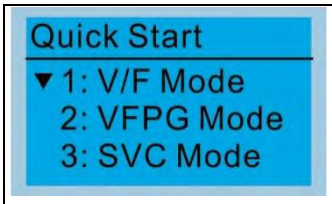

Press ENTER to select.

Quick Start:
1. V/F Mode
2. VFPG Mode
3. SVC Mode
4. FOCPG Mode
5. TQCPG Mode
6. My Mode

1. VF Mode

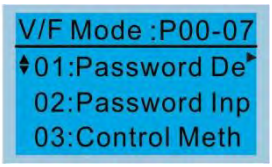

01:Password Decoder

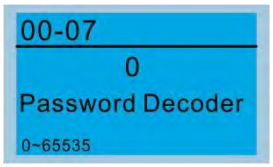

Items
1. Parameter protection password input (Pr.00-07)
2. Parameter protection password setting (Pr.00-08)
3. Control mode (Pr.00-10)
4. Speed control mode (Pr.00-11)
5. Load selection (Pr.00-16)
6. Carrier frequency (Pr.00-17)
7. Master frequency command source (AUTO) / Source selection of the PID target (Pr.00-20)
8. Operation command source (AUTO) (Pr.00-21)
9. Stop method (Pr.00-22)
10. Digital keypad STOP function (Pr.00-32)
11. Max. operation frequency (Pr.01-00)
12. Rated / base frequency of motor 1 (Pr.01-01)
13. Rated / base output voltage of motor 1 (Pr.01-02)
14. Mid-point frequency 1 of motor 1 (Pr.01-03)
15. Mid-point voltage 1 of motor 1 (Pr.01-04)
16. Mid-point frequency 2 of motor 1 (Pr.01-05)
17. Mid-point voltage 2 of motor 1 (Pr.01-06)
18. Minimum output frequency of motor 1 (Pr.01-07)
19. Minimum output voltage of motor 1 (Pr.01-08)
20. Output frequency upper limit (Pr.01-10)
21. Output frequency lower limit (Pr.01-11)

22. Acceleration time 1 (Pr.01-12)
23. Deceleration time 1 (Pr.01-13)
24. Over-voltage stall prevention (Pr.06-01)
25. Derating protection (Pr.06-55)
26. Software brake chopper action level (Pr.07-00)
27. Speed tracking during start-up (Pr.07-12)
28. Emergency stop (EF) & force to stop selection (Pr.07-20)
29. Torque command filter time (Pr.07-24)
30. Slip compensation filter time (Pr.07-25)
31. Torque compensation gain (Pr.07-26)
32. Slip Compensation Gain (Pr.07-27)

2. VFPG Mode

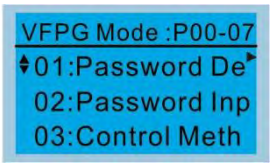

01: Password Decoder

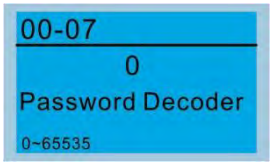

Items

1. Parameter protection password input (Pr.00-07)
2. Parameter protection password setting (Pr.00-08)
3. Control mode (Pr.00-10)
4. Speed control mode (Pr.00-11)
5. Load selection (Pr.00-16)
6. Master frequency command source (AUTO) / Source selection of the PID target (Pr.00-20)
7. Operation command source (AUTO) (Pr.00-21)
8. Stop method (Pr.00-22)
9. Digital keypad STOP function (Pr.00-32)
10. Max. operation frequency (Pr.01-00)
11. Output frequency of motor 1 (Pr.01-01)
12. Output voltage of motor 1 (Pr.01-02)
13. Min. output frequency of motor 1 (Pr.01-07)
14. Min. output voltage of motor 1 (Pr.01-08)
15. Output frequency upper limit (Pr.01-10)
16. Output frequency lower limit (Pr.01-11)
17. Acceleration time 1 (Pr.01-12)
18. Deceleration time 1 (Pr.01-13)
19. Over-voltage stall prevention (Pr.06-01)
20. Software brake chopper action level (Pr.07-00)
21. Torque command filter time (Pr.07-24)
22. Slip compensation filter time (Pr.07-25)
23. Slip compensation gain (Pr.07-27)
24. Encoder type selection (Pr.10-00)
25. Encoder pulses per revolution (Pr.10-01)
26. Encoder input type setting (Pr.10-02)
27. ASR 1 gain (Pr.11-06)
28. ASR 1 integral time (Pr.11-07)
29. ASR 2 gain (Pr.11-08)
30. ASR 2 integral time (Pr.11-09)
31. ASR gain of zero speed (Pr.11-10)
32. ASR1 integral time of zero speed (Pr.11-11)

3. SVC Mode

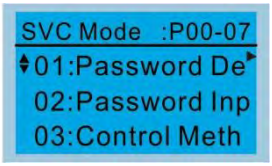

Items

1. Parameter protection password input (Pr.00-07)
2. Parameter protection password setting (Pr.00-08)
3. Control mode (Pr.00-10)
4. Speed control mode (Pr.00-11)

01: Password Decoder

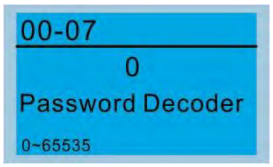

5. Load selection (Pr.00-16)
6. Carrier frequency (Pr.00-17)
7. Master frequency command source (AUTO) / Source selection of the PID target (Pr.00-20)
8. Operation command source (AUTO) (Pr.00-21)
9. Stop method (Pr.00-22)
10. Digital keypad STOP function (Pr.00-32)
11. Max. operation frequency (Pr.01-00)
12. Rated / base frequency of motor 1 (Pr.01-01)
13. Rated / base output voltage setting of motor 1 (Pr.01-02)
14. Minimum output frequency of motor 1 (Pr.01-07)
15. Minimum output voltage of motor 1 (Pr.01-08)
16. Output frequency upper limit (Pr.01-10)
17. Output frequency lower limit (Pr.01-11)
18. Acceleration time 1 (Pr.01-12)
19. Deceleration time 1 (Pr.01-13)
20. Full-load current for induction motor 1 (Pr.05-01)
21. Rated power for induction motor 1 (Pr.05-02)
22. Rated speed for induction motor 1 (Pr.05-03)
23. Number of poles for induction motor 1 (Pr.05-04)
24. No-load current for induction motor 1 (Pr.05-05)
25. Over-voltage stall prevention (Pr.06-01)
26. Over-current stall prevention during acceleration (Pr.06-03)
27. Derating protection (Pr.06-55)
28. Software brake chopper action level (Pr.07-00)
29. Emergency stop (EF) & Force to stop selection (Pr.07-20)
30. Torque command filter time (Pr.07-24)
31. Slip compensation filter time (Pr.07-25)
32. Slip compensation gain (Pr.07-27)

4. FOCPG Mode

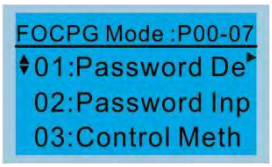

Items
1. Parameter protection password input (Pr.00-07)
2. Parameter protection password setting (Pr.00-08)
3. Control mode (Pr.00-10)
4. Speed control mode (Pr.00-11)
5. Master frequency command source (AUTO) / Source selection of the PID target (Pr.00-20)
6. Operation command source (AUTO) (Pr.00-21)
7. Stop Method (Pr.00-22)
8. Max. operation frequency (Pr.01-00)
9. Rated / base frequency of motor 1 (Pr.01-01)
10. Rated / base output voltage of motor 1

01: Password Decoder

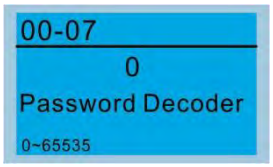

(Pr.01-02)
11. Output frequency upper limit (Pr.01-10)
12. Output frequency lower limit (Pr.01-11)
13. Acceleration time 1 (Pr.01-12)
14. Deceleration time 1 (Pr.01-13)
15. Full-load current for induction motor 1 (Pr.05-01)
16. Rated power for induction motor 1 (Pr.05-02)
17. Rated speed for induction motor 1 (Pr.05-03)
18. Number of poles for induction motor 1 (Pr.05-04)
19. No-load current for induction motor 1 (Pr.05-05)
20. Over-voltage stall prevention (Pr.06-01)
21. Over-current stall prevention during acceleration (Pr.06-03)
22. Derating protection (Pr.06-55)
23. Software brake level (Pr.07-00)
24. Emergency stop (EF) & force to stop selection (Pr.07-20)
25. Encoder type selection (Pr.10-00)
26. Encoder pulses per revolution (Pr.10-01)
27. Encoder input type setting (Pr.10-02)
28. System control (Pr.11-00)
29. Per-unit of system inertia (Pr.11-01)
30. ASR1 low-speed bandwidth (Pr.11-03)
31. ASR2 high-speed bandwidth (Pr.11-04)
32. Zero-speed bandwidth (Pr.11-05)

5. TQCPG Mode

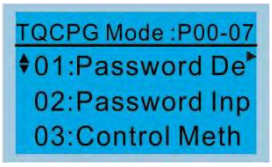

01: Password Decoder

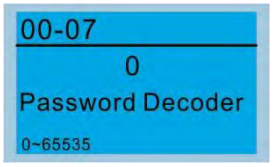

Items
1. Parameter protection password input (Pr.00-07)
2. Parameter protection password setting (Pr.00-08)
3. Control mode (Pr.00-10)
4. Speed control mode (Pr.00-11)
5. Master frequency command source (AUTO) / Source selection of the PID target (Pr.00-20)
6. Operation command source (AUTO) (Pr.00-21)
7. Max. operation frequency (Pr.01-00)
8. Output frequency of motor 1 (Pr.01-01)
9. Output voltage of motor 1 (Pr.01-02)
10. Full-load current for induction motor 1 (Pr.05-01)
11. Rated power for induction motor 1 (Pr.05-02)
12. Rated speed for induction motor 1 (Pr.05-03)
13. Number of poles for induction motor 1 (Pr.05-04)
14. No-load current of induction motor 1 (Pr.05-05)
15. Over-voltage stall prevention (Pr.06-01)
16. Software brake chopper action level (Pr.07-00)
17. Encoder type selection (Pr.10-00)
18. Encoder pulses per revolution (Pr.10-01)

19. Encoder input type setting (Pr.10-02)
20. System control (Pr.11-00)
21. Per-unit of system inertia (Pr.11-01)
22. ASR1 low-speed bandwidth (Pr.11-03)
23. ASR2 high-speed bandwidth (Pr.11-04)
24. Zero-speed bandwidth (Pr.11-05)
25. Max. torque command (Pr.11-27)
26. Torque offset source (Pr.11-28)
27. Torque offset setting (Pr.11-29)
28. Torque command source (Pr.11-33)
29. Torque command (Pr.11-34)
30. Speed limit selection (Pr.11-36)
31. Forward speed limit (torque mode) (Pr.11-37)
32. Reverse speed limit (torque mode) (Pr.11-38)

6. My Mode

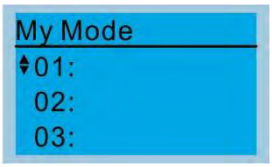

Press F4 in parameter setting screen to save the parameter to My Mode. To delete or correct the parameter, select this parameter and press F4 for DEL in the bottom right corner.

Items

You can save 01–32 sets of parameters (Pr).

Setup process

1. Go to Parameter Setup function. Press ENTER to select the parameter to use. There is an ADD in the bottom right corner of the screen. Press F4 to add this parameter to My Mode.

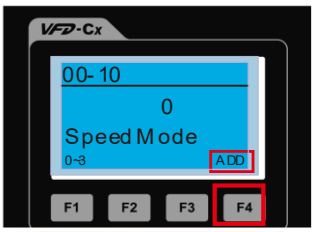

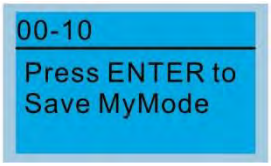

2. The parameter (Pr) displays in My mode if it is properly saved. To correct or to delete this parameter, press F4 for DEL.

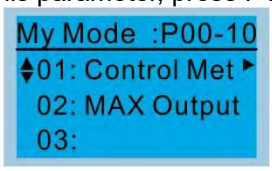

3. To delete a parameter, go to My Mode and select the parameter to delete. Press ENTER to enter the parameter setting screen. DEL appears in the bottom left corner of the screen. Press F4 to delete this parameter from My Mode.

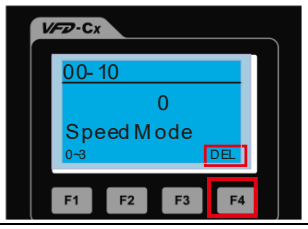

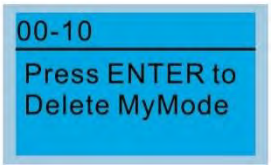

4. After you press ENTER to delete <01 Control Mode>, the <02 Maximum Operating Frequency > automatically replaces <01 Control Mode>.

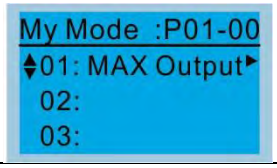

3. Application Selection List

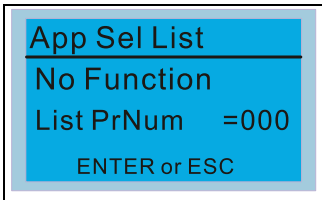

This function enables you to select application and its parameter sets.

Example:
In the menu content, select 3: Application Selection List

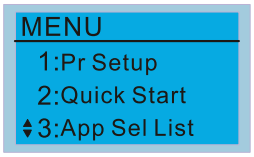

Press ENTER to go into the Application Selection List

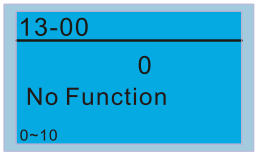

Select Application

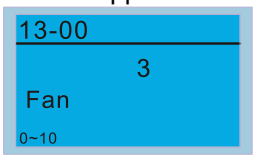

Press ENTER to enter the application selection screen, and the selected application industry is “Fan”.

Press ENTER to enter the Fan application screen.

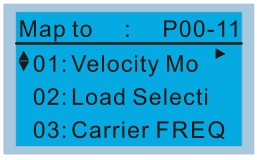

Press the Up / Down keys to select the parameter to set.

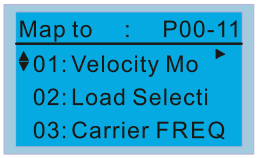

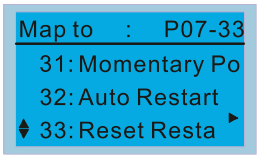

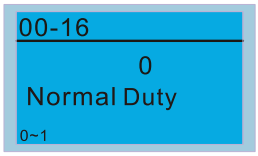

Select 0: Normal duty according to your needs, and then press ENTER.

4. Changed List

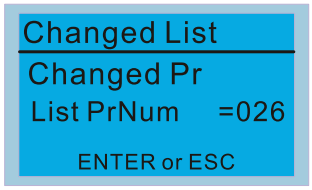

This function records the parameters you have changed.
Example:
Set Pr.13-00 Application Selection = 3: Fan

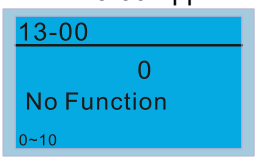

Enter the changed list screen. List PrNum=026 means that there are 26 parameters that have been changed.

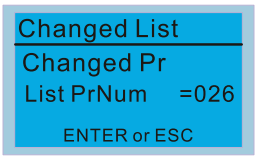

Press ENTER to enter the changed list screen.

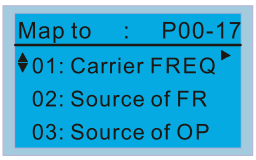

Use the Up / Down keys to select the parameters to check or to change.
Press ENTER to enter the parameter.

5. Copy Parameter

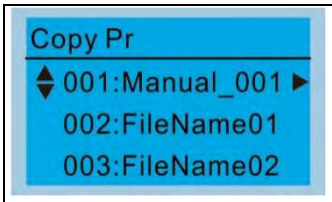

Press ENTER to go to 001–004: content storage

Four groups of parameters are available to copy.
The steps are shown in the example below.
Example: parameters saved in the motor drive.

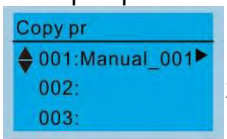

1. Go to Copy Parameter
2. Select the parameter group to copy and press ENTER.

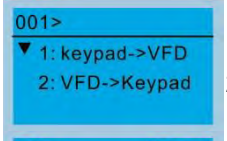

1. Select 1: keypad → VFD.
2. Press ENTER to go to “keypad → VFD” screen.

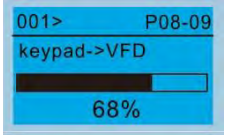

Begin copying parameters until it is done.

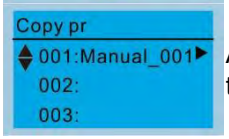

After copying is done, the keypad automatically returns to this screen.

Example: parameter saved in the keypad.

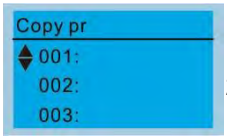

1. Go to Copy parameter
2. Select the parameter group to copy and press ENTER.

	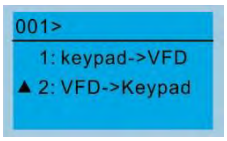 Press ENTER to go to the “VFD → keypad” screen. 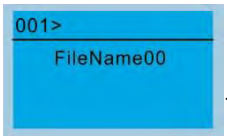 Press the Up / Down keys to select a symbol. Pres the Left / Right keys to move the cursor to select a file name. String & Symbol Table: ！” ＃＄％＆’ （）＊＋，－．／０１２３４５６７８９：；＜＝＞？@ＡＢＣＤＥＦＧＨＩＪＫＬＭＮＯＰＱＲＳＴＵＶＷＸＹＺ〔＼〕＾＿ ‘ａｂｃｄｆｇｈｉｊｋｌｍｎｏｐｑｒｓｔｕｖｗｘｙｚ｛｜｝～ 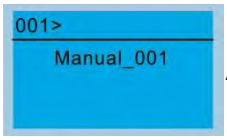 After you confirm the file name, press ENTER. 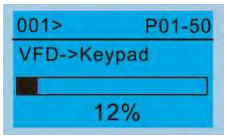 Begin copying parameters until it is done. 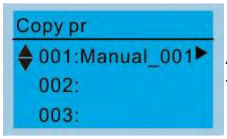 After copying is done, the keypad automatically returns to this screen. 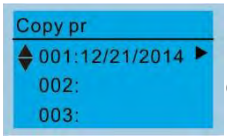 Press the Right key to see the date of the parameter copied. 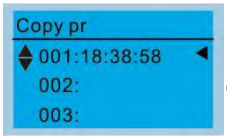 Press the Right key to see the time of the parameters copied.

6. Fault Record

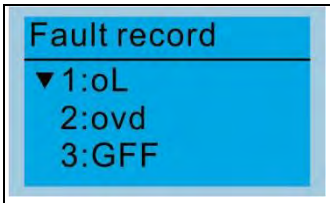 Press ENTER to see an error record’s details.	Able to store 6 error codes (Keypad V1.02 and previous versions) Able to store 30 error codes (Keypad V1.20 and later version) The most recent error record shows as the first record. Choose an error record to see details such as date, time, frequency, current, voltage and DC bus voltage. Press the Up / Down keys to select an error record. Press ENTER to see that error record’s details. 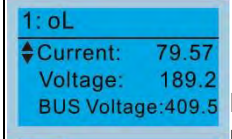 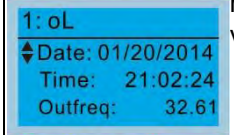 Press the Up / Down keys to scroll through an error record’s details such as date, time, frequency, current, voltage, and DC bus voltage. Press the Up / Down keys to select the next error code. After selecting an error code, press ENTER to see that error record’s details.

	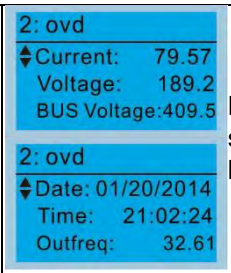 Press the Up / Down keys to see an error record's details such as date, time, frequency, current, voltage, and DC bus voltage. **NOTE:** The AC motor drive actions are recorded and saved to the KPC-CC01. When you remove the KPC-CC01 and connect it to another AC motor drive, the previous fault records are not deleted. The new fault records of the new AC motor drive continue to be added to the KPC-CC01.

7. Language Setup

 Press the Up / Down keys to select the language, and then press ENTER.	The language setting option is displayed in the language of your choice. Language setting options: 1. English 5. Русский 9. Polski 2. 繁體中文 6. Español 10. Deutsch 3. 简体中文 7. Português 11. Italiano 4. Türkçe 8. français 12. Svenska

8. Time Setup

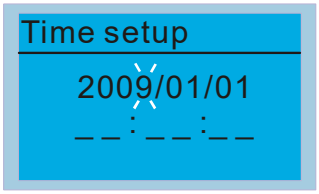 Use the Left / Right keys to select Year, Month, Day, Hour, Minute or Seconds to change.	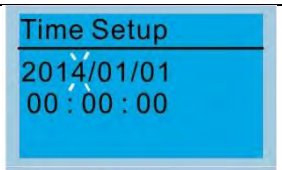	Press the Up / Down keys to set the Year
		Press the Up / Down keys to set the Month
		Press the Up / Down keys to set the Day
	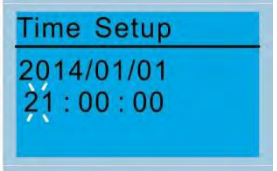	Press the Up / Down keys to set the Hour
		Press the Up / Down keys to set the Minute
		Press the Up / Down keys to set the Second
	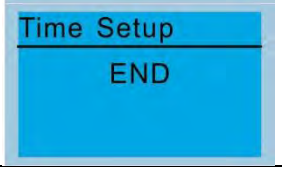	Press ENTER to confirm the Time Setup.

	NOTE: Limitation: The charging process for the keypad super capacitor finishes in about 6 minutes. **When the digital keypad is removed, the time setting is saved for 7 days**. After 7 days, you must reset the time.

9. Keypad Locked

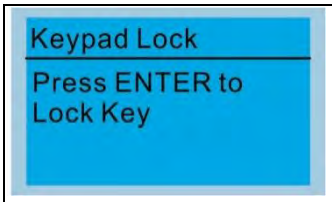 Press ENTER to lock	Lock the keypad Use this function to lock the keypad. The main screen does not display "keypad locked" when the keypad is locked; however, it displays the message"Press ESC 3 sec. to UnLock Key" when you press any key. 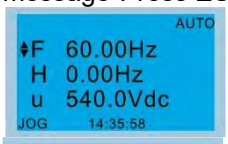 When the keypad is locked, the main screen does not indicate the lock status. 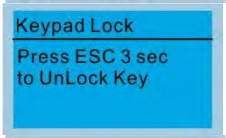 Press any key on the keypad; a message displays as shown on the left. If you do not press the ESC key, the keypad automatically returns to this screen. 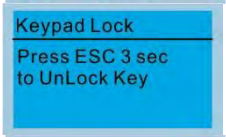 Press any key on the keypad; a message displays as shown on the left. Press ESC for 3 seconds to unlock the keypad; the keypad returns to this screen. All keys on the keypad is functional. All keys on the keypad is functional. Turning the power off and on does not lock the keypad.

10. PLC Function

 Press the Up / Down keys to select a PLC function, and then press ENTER.	When activating and stopping the PLC function (choosing 2: PLC Run or 3: PLC Stop), the PLC status displays on main screen (Delta default setting). 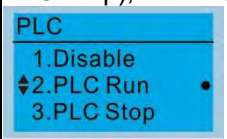 Choose option 2: PLC Run to enable the PLC function. 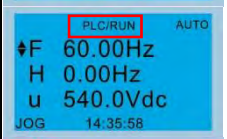 The default on the main screen displays the PLC / RUN status message. 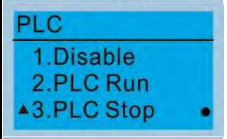 Choose option 3: PLC Stop to disable the PLC function. The default on the main screen displays the PLC / STOP status message. 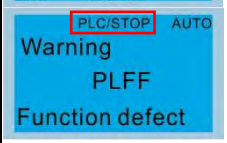 If the PLC program is not available in the control board, the PLFF warning displays when you choose option 2 or 3. In this case, choose option 1: Disable to clear PLFF warning.

11. Copy PLC

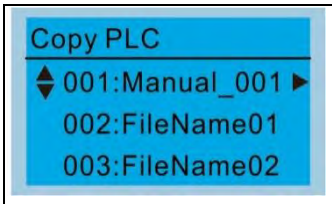

Four groups of parameters are available to copy.

The steps are shown in the example below.

Example: PLC program saved in the motor drive.

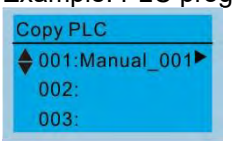

1. Go to Copy PLC
2. Select the PLC program to copy and press ENTER.

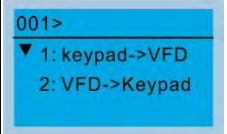

1. Select 1: keypad → VFD.
2. Press ENTER to go to the “keypad → VFD” screen.

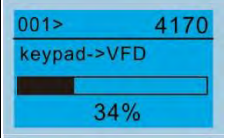

Begin copying the PLC program until it is done.

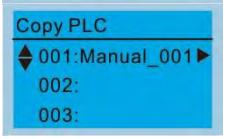

After copying is done, the keypad automatically returns to this screen.

NOTE:

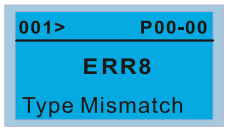

If you select “Option 1: keypad → VFD”, check if the PLC program is built-in to the KPC-CC01 keypad. If the PLC program is not available in the keypad when you select “Option 1: keypad → VFD”, an “ERR8 Warning: Type Mismatch” displays on the screen.

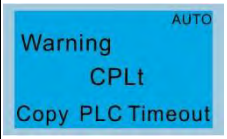

If you unplug the keypad and plug it back while copying the PLC program, the screen displays a CPLt warning.

Example: PLC program saved in the keypad.

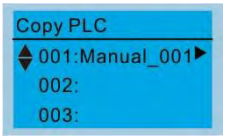

1. Go to Copy PLC.
2. Select the PLC program to copy and press ENTER.

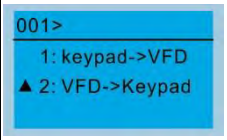

Press ENTER to go to the “VFD → keypad” screen.

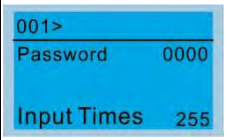

If the WPLSoft editor is installed and uses password, enter the password to save the file to the keypad.

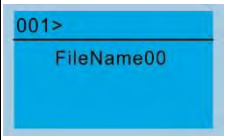

Press the Up/ Down keys to select a symbol.
Press the Left/ Right keys to move the cursor to select a file name.

String & Symbol Table:

！” ＃＄％＆’ （）＊＋，－．／０１２３４５６７８９：；＜＝＞？@Ａ
ＢＣＤＥＦＧＨＩＪＫＬＭＮＯＰＱＲＳＴＵＶＷＸＹＺ〔＼〕＾＿ ‘ａｂ
ｃｄｆｇｈｉｊｋｌｍｎｏｐｑｒｓｔｕｖｗｘｙｚ｛｜｝～

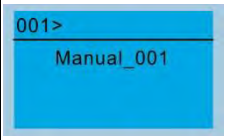

After you confirm the file name, press ENTER.

	001> 2010 VFD->Keypad 12%	Begin copying the PLC program until it is done.
	Copy PLC 001:Manual_001 002: 003:	After copying is done, the keypad automatically returns to this screen.
	Copy PLC 001:12/21/2014 002: 003:	Press the Right key to see the date of the program copied.
	Copy PLC 001:18:38:58 002: 003:	Press the Right key to see the time of the program copied.

12. Display setup

Displ Setup ▼1:Contrast 2:Back-Light 3:Text Color Press ENTER to go to the setting screen.	1. Contrast Contrast +0 -20 +20	Press the Up / Down keys to adjust the setting value.
	Contrast +10 -20 +20	For example, increase Contrast to +10.
	Displ Setup ▼1:Contrast 2:Back-Light 3:Text Color	After you set the value, press ENTER to see the screen display after contrast is adjusted to +10.
	Contrast -10 -20 +20	Then press ENTER and decrease the Contrast to -10.
	Displ Setup ▼1:Contrast 2:Back-Light 3:Text Color	Press ENTER to see screen display after contrast is adjusted to -10.
	2. Back-light Displ Setup 1:Contrast 2:Back-Light 3:Text Color	Press ENTER to go to thr Back-Light Time Setting screen.
	Back-Light Min 5 0 10	Press the Up / Down keys to adjust the setting value.
	Back-Light Min 0 0 10	When the setting value is 0 Min, the backlight remains on.

When the setting value is 10 Min, the backlight turns off in 10 minutes.

3. Text Color

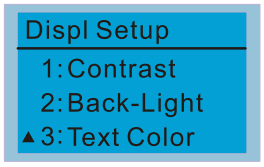

Press ENTER to go to the Text Color Setting screen.

The default value is White Text.

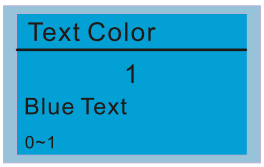

Press the Up / Down keys to adjust the setting value, and then press ENTER.

The setting value changes to Blue Text.

13. Start-up

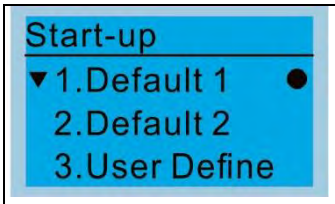

1. Default 1 DELTA LOGO

2. Default 2 DELTA Text

3. User Define: an optional accessory is required (TPEditor & USB / RS-485 Communication Interface-IFD6530) to design your own start-up screen. If the editor accessory is not installed, the User Define option displays a blank screen.

USB/RS-485 Communication Interface-IFD6530
Refer to Chapter 07 Optional Accessories for more detail.

TPEditor
Download TPEditor software at Delta website, select TPEditor version 1.60 or above. Refer to the installation instruction for TPEditor in Section 10-3.

14. Main page

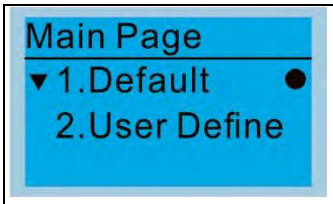

Default screen and editable screen are available

Press ENTER to select.

1. Default page

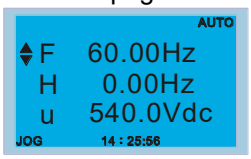

F 60.00Hz >>> H >>> A >>> U (options rotate)

2. User Define: an optional accessory is required (TPEditor & USB / RS-485 Communication Interface-IFD6530) to design your own main screen. If the editor accessory is not installed, the User Define option displays a blank screen.

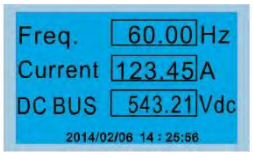

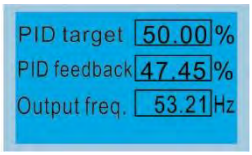

USB/RS-485 Communication Interface-IFD6530

Refer to Chapter 07 Optional Accessories for more details.

TPEditor

Download TPEditor software at Delta website, select TPEditor version 1.60 or above. Refer to the installation instruction for TPEditor in Section 10-3.

15. PC Link

1. TPEditor: This function enables you to connect the keypad to a computer then download and edit user-defined screens.

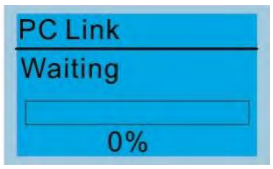

Press ENTER to go to Waiting to connect to PC screen.

In TPEditor, from the **Communication** menu, choose **Write to HMI**.

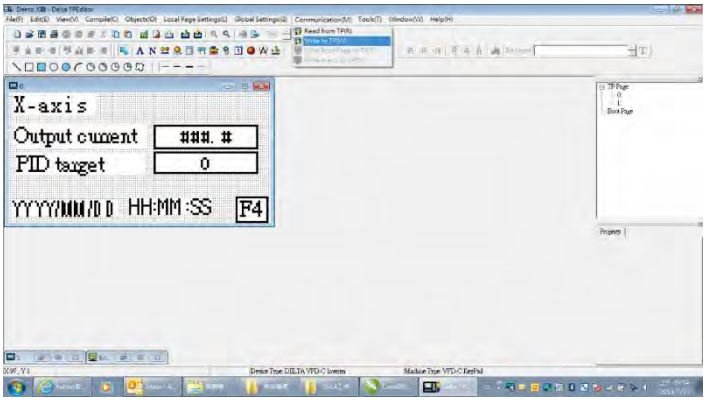

In the **Confirm** message box, click **YES**.

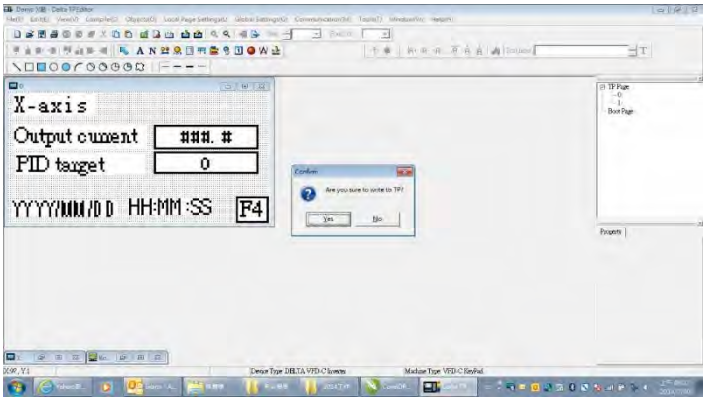

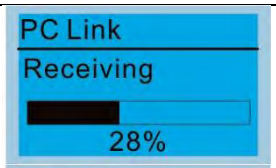

The software starts downloading screens to edit to the KPC-CC01.

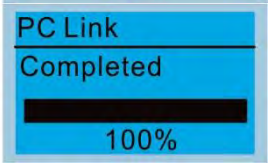

Download completed

2. VFDSoft: This function enables you to link to the VFDSoft then upload the parameters 1–4 you have saved in the KPC-CC01.

NOTE: If the Operation System (OS) of your computer is Windows 10, right -click the VFDSoft icon to enter the **Property**. Then, click the **Compatibility** tab and select the **Run the program as an administrator** checkbox. (as shown in the red frames in the figure below)

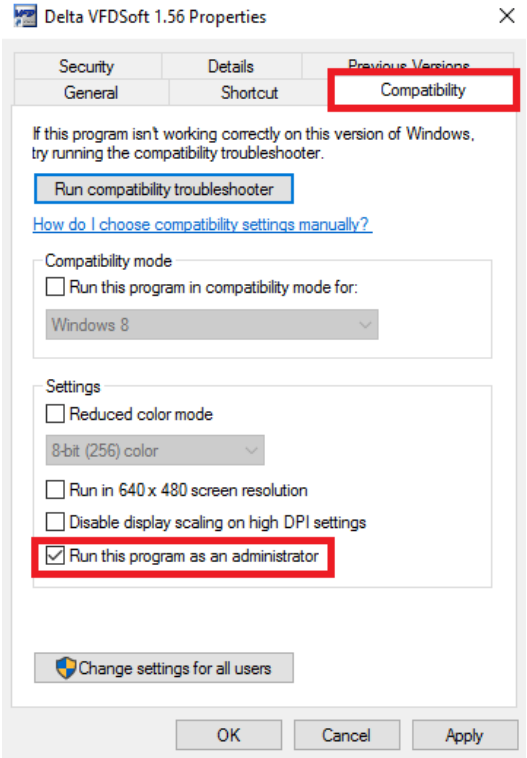

3. Connecting the KPC-CCO1 to a computer

Select 2: VFDSoft and then press ENTER.

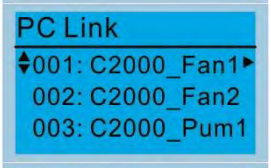

Press the Up / Down keys to select a parameter group to upload to the VFDSoft.

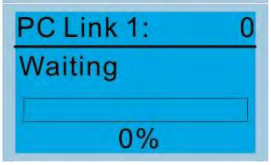

Press ENTER to go to Waiting to connect to PC screen.

Open VFDSoft and click **Parameter** on the toolbar.

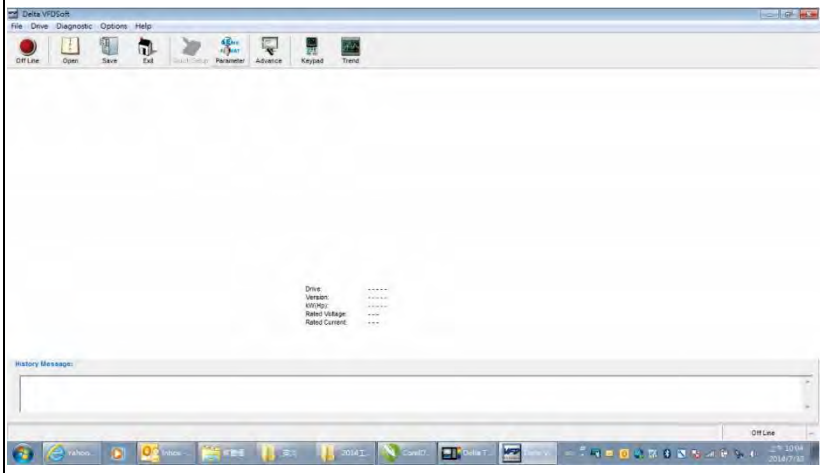

In the Parameter Management, from the **Table** menu, choose **Read from KPC-CC01**.

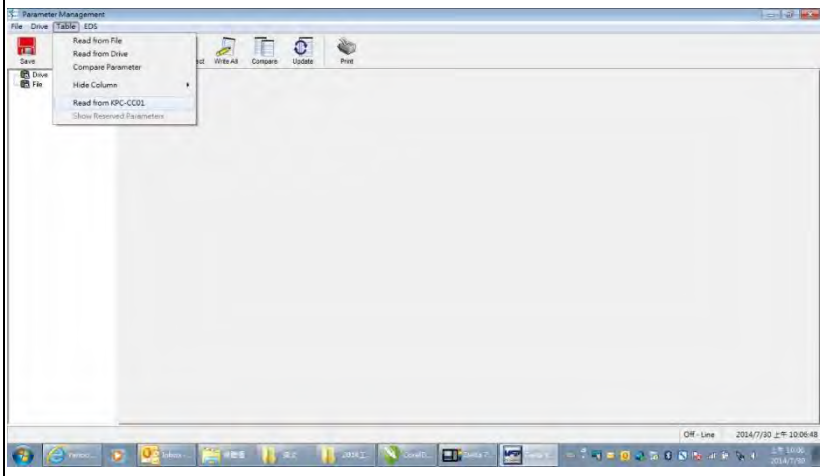

Choose the correct communication port and click **OK**

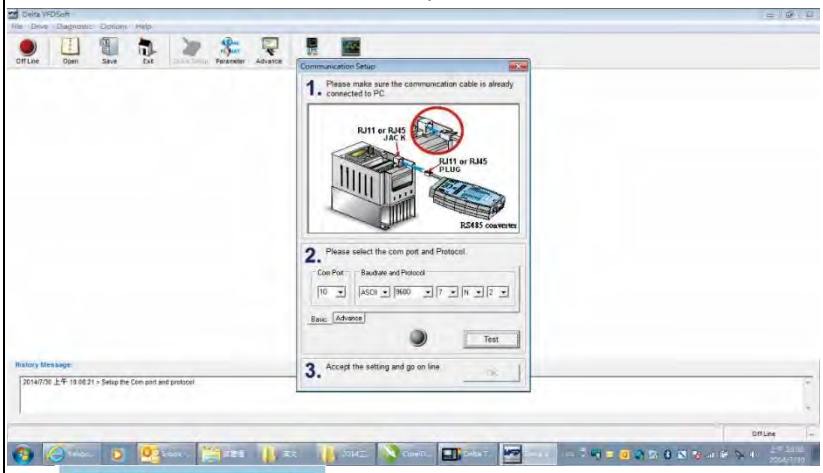

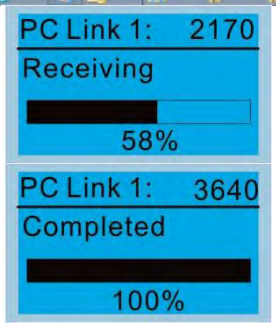

Start to upload parameters to VFDSoft

Uploading parameter is completed

Before using the user-defined start-up screen and user-defined main screen, you must preset the start-up screen and the main screen as user-defined. If you do not download the user-defined screen to the KPC-CC01, the start-up screen and the main screen are blank.

16. Start Wizard

16.1 New drive start-up setting process

When a new drive is powered on, it directly enters the Start Wizard. There are three modes in the start-up setting process: Start Wizard, Exit Wizard and Test Mode.

(1) Start Wizard:

- In Start Wizard, you can set drive's parameters such as Calendar, Maximum operation frequency and Maximum voltage…; refer to Table 1 for setting items and orders.
- The drive exits Start Wizard when you finish the complete setting process, and will not enter this process when rebooting the power.

(2) Exit Wizard:

- Exit the Start Wizard mode. The drive does not go to Start Wizard when rebooting the power.

(3) Test Mode:

- This function is hidden to avoid misuse. Refer to the following flow chart to enter Test Mode.
- When the drive is in Test mode, it temporarily disables the Start Wizard and Exit Wizard mode.
- The Test Mode is designed for distributors / suppliers / clients to manage and operate the drive before shipping it out.
- If you enter Test Mode without exiting the Start Wizard process, the drive will begin with the new drive start-up process upon next power on.

Setting Order	Description	Parameter
1	Calendar	N/A
2	Output frequency of motor 1	01-01
3	Output voltage of motor 1	01-02
4	Full-load current for induction motor 1 (A)	05-01
5	Number of poles for induction motor 1	05-04
6	Rated speed for induction motor 1 (rpm)	05-03
7	Minimum output frequency of motor 1	01-07
8	Maximum operation frequency	01-00
9	Master frequency command source (AUTO) / Source selection of the PID target	00-20
10	Operation command source (AUTO)	00-21
11	V/F curve selection	01-43
12	Acceleration time 1	01-12
13	Deceleration time 1	01-13

Table 1: Start Wizard setting items

Flow chart for the above setting process:

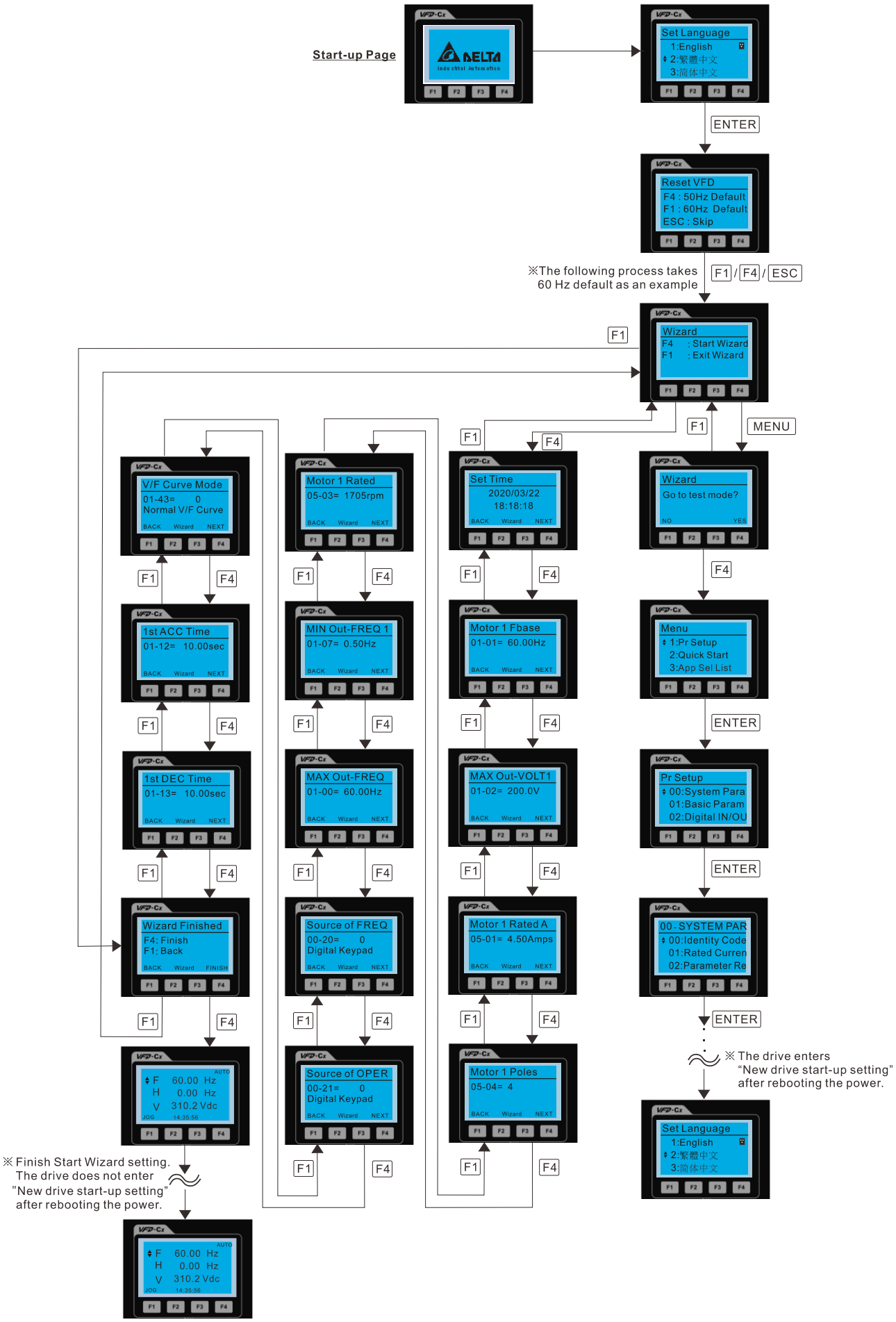

16.2 Re-start Start Wizard

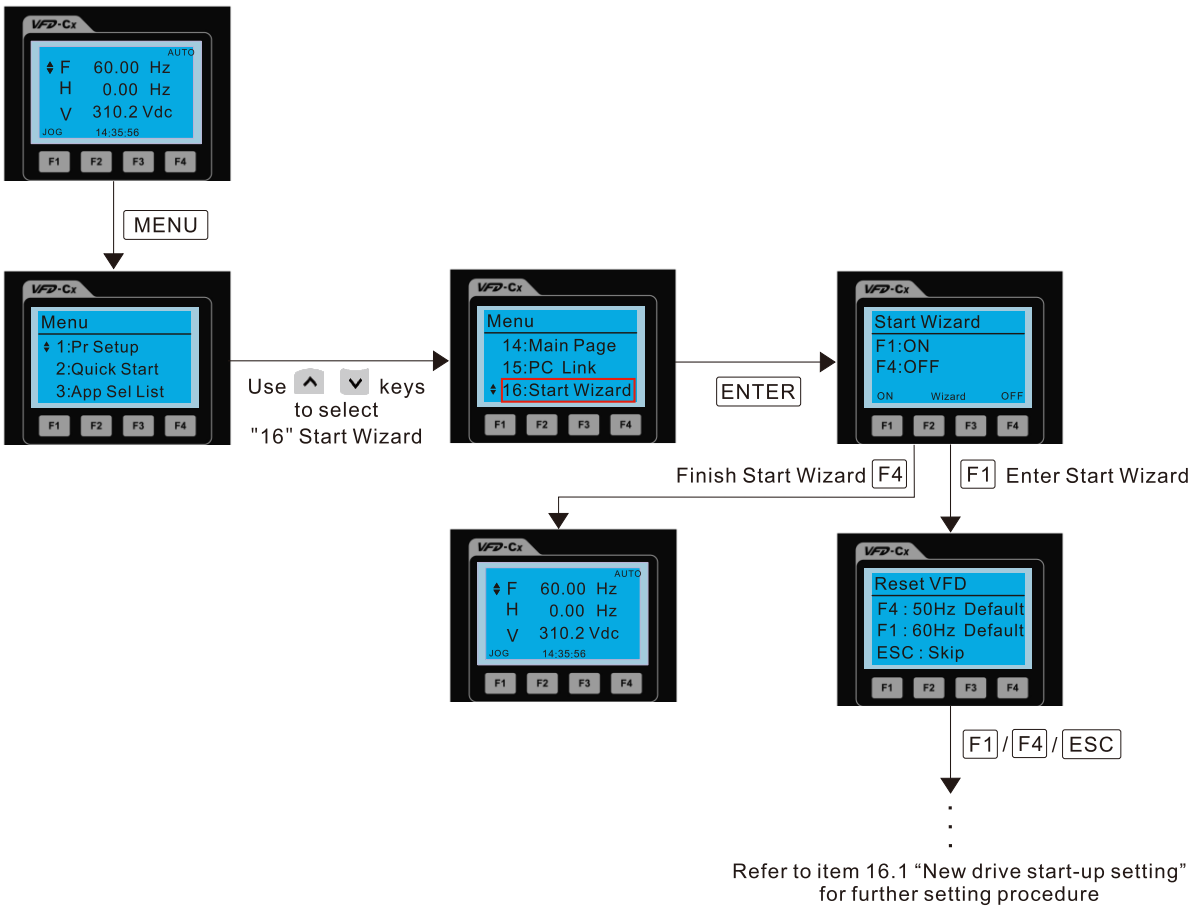

NOTE: The "16: Start Wizard" on the menu is to set whether the screen shows start wizard when powering on the drive.

Other displays

When a fault occurs, the screen display shows the fault or warning:

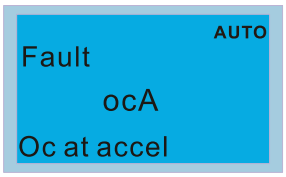

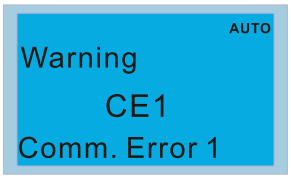

1. Press the STOP / RESET key to reset the fault code. If there is no response, contact your local distributor or return the unit to the factory. To view the fault DC bus voltage, output current and output voltage, press MENU and then choose 6: Fault Record.
2. After resetting, if the screen returns to the main page and shows no fault after you press ESC, the fault is cleared.
3. When the fault or warning message appears, the LED backlight blinks until you clear the fault or warning.

Optional accessory: RJ45 Extension Lead for Digital Keypad

Part No.	Description
CBC-K3FT	RJ45 extension lead, 3 feet (approximately 0.9 m)
CBC-K5FT	RJ45 extension lead, 5 feet (approximately 1.5 m)
CBC-K7FT	RJ45 extension lead, 7 feet (approximately 2.1 m)
CBC-K10FT	RJ45 extension lead, 10 feet (approximately 3 m)
CBC-K16FT	RJ45 extension lead, 16 feet (approximately 4.9 m)

NOTE: When you need communication cables, buy non-shielded, 24 AWG, four-wire twisted pair, 100 ohms communication cables.

10-3 TPEditor Installation Instruction

TPEditor can edit up to 256 HMI (Human-Machine Interface) pages with a total storage capacity of 256 KB. Each page can include 50 normal objects and 10 communication objects.

1) TPEditor: Setup & Basic Functions

1. Run TPEditor version 1.60 or above by double-clicking the program icon.

2. On the **File** menu, click **New**. In the New Project dialog box, for **Set Device Type**, select **DELTA VFD-C Inverter**. For **TP Type**, select **VFD-C KeyPad**. For **File Name**, enter TPE0 and then click **OK**.

3. The editor displays the Design window. On the **Edit** menu, click **Add a New Page**. You can also right-click on the TP page in the upper right corner of the Design window and click **Add** to add one more page(s) to edit.

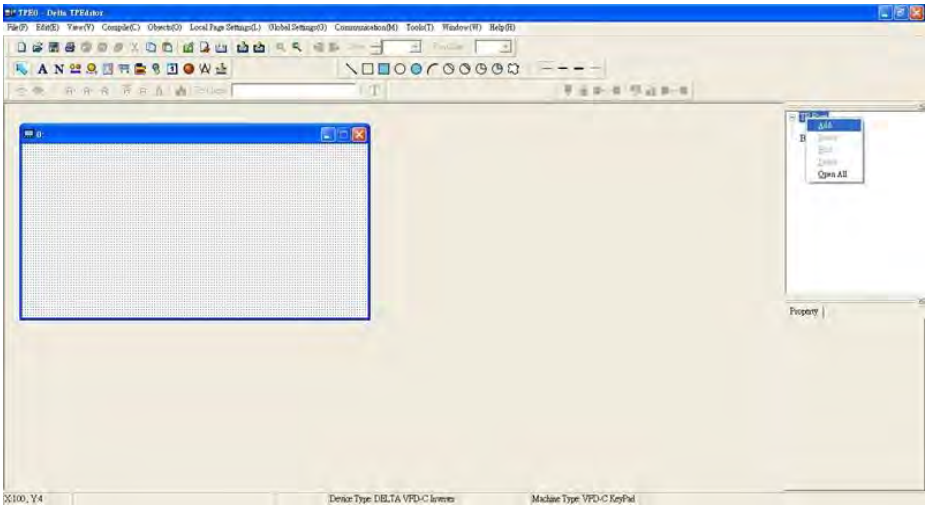

4. Edit the start-up screen.

5. Add static text. Open a blank page (step 3), then on the toolbar click . Double-click the blank page to display the **Static Text Setting** dialog box, and then enter the static text.

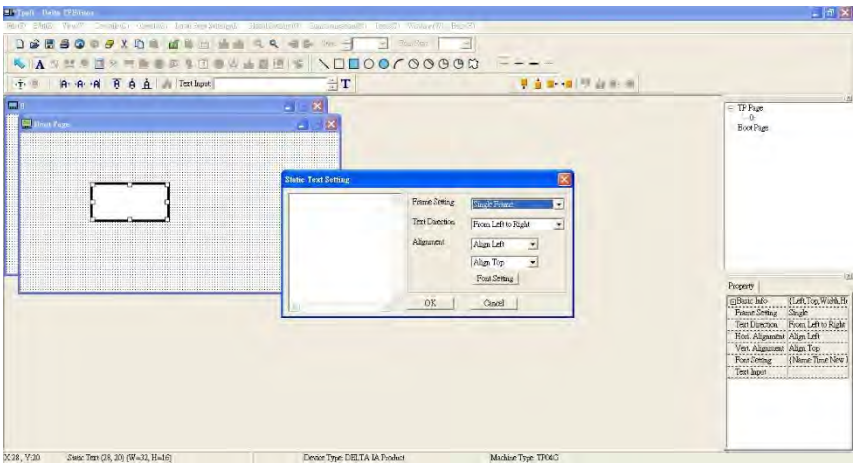

6. Add a static bitmap. Open a blank page (step 3), then on the toolbar, click . Double-click the blank page to display the **Static Bitmap Setting** dialog box where you can choose the bitmap.

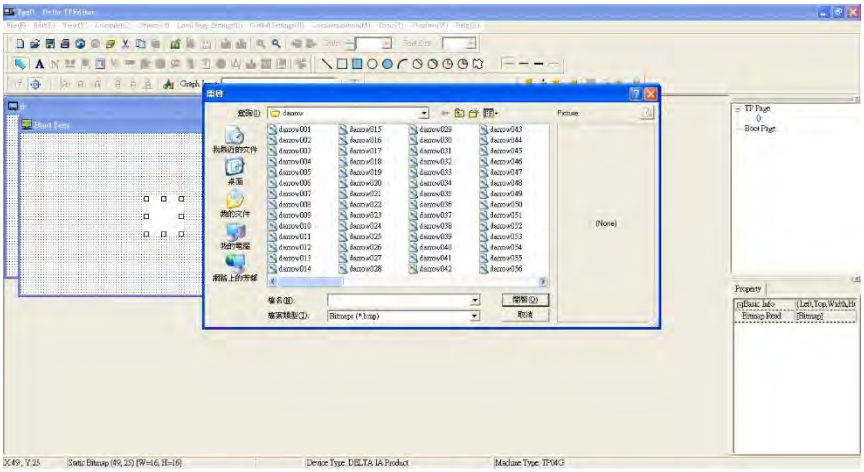

You can only use images in the BMP format. Click the image and then click Open to show the image in the page.

7. Add a geometric bitmap. There are 11 kinds of geometric bitmaps to choose. Open a new blank page (step 3), then on the toolbar click the geometric bitmap icon that you need . In the page, drag the geometric bitmap and enlarge it to the size that you need.

8. When you finish editing the start-up screen, on the **Communication** menu, click **Input User Defined Keypad Starting Screen.**

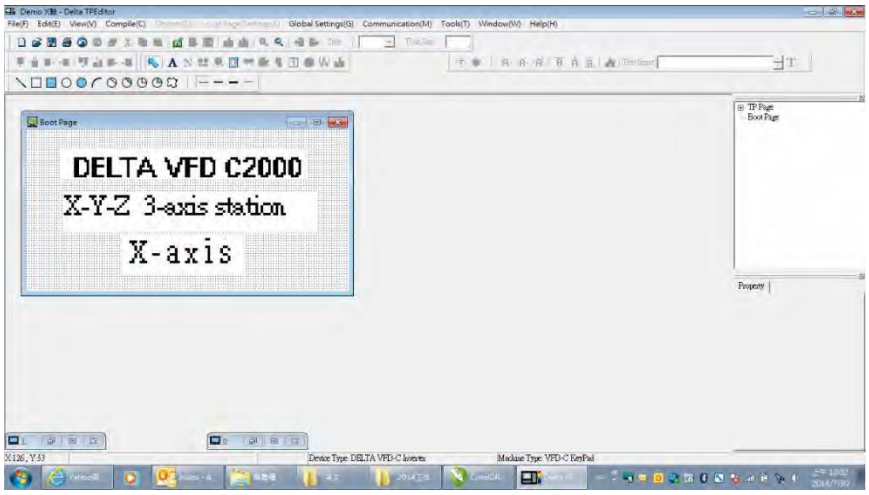

9. Download the new setting: On the **Tool** menu, click **Communication**. Set up the communication port and speed for the IFD6530. There are three speeds available: 9600 bps, 19200 bps, and 38400 bps.

10. On the **Communication** menu, click **Input User Defined Keypad Starting Screen**.

11. The Editor displays a message asking you to confirm the new setting. Before you click **OK**, on the keypad, go to MENU, select PC LINK, press ENTER and then wait for few seconds. Then click **YES** in the confirmation dialog box to start downloading.

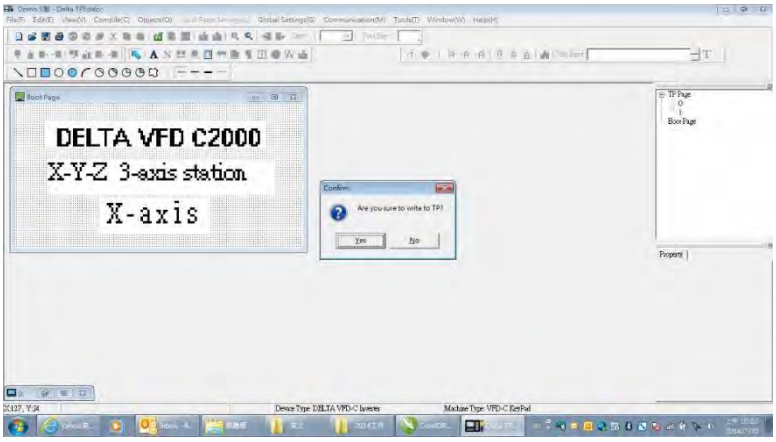

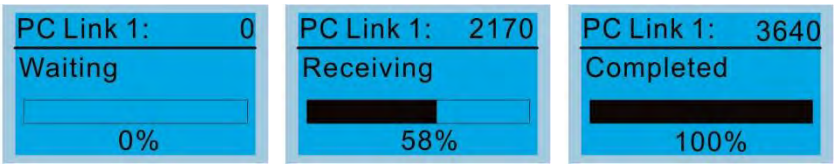

2) Edit the Main Page and Download to the Keypad

1. In the Editor, add a page to edit. On the **Edit** menu, click **Add a New Page**. You can also right-click on the TP page in the upper right corner of the Design window and click **Add** to add one more pages to edit. This keypad currently supports up to 256 pages.

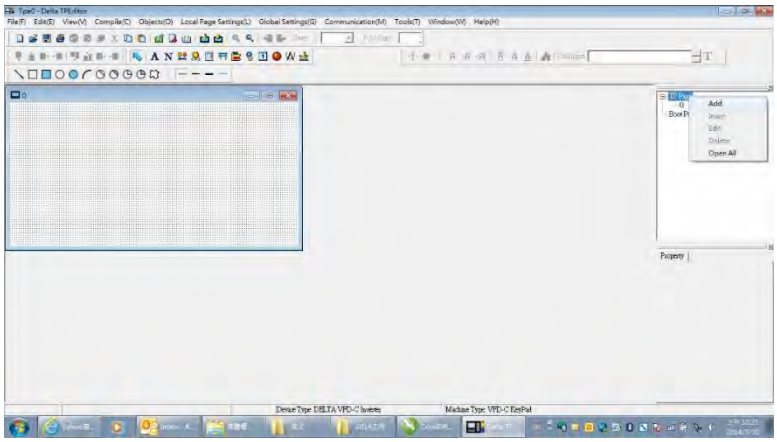

2. In the bottom right-hand corner of the Editor, click the page number to edit, or on the **View** menu, click **HMI Page** to start editing the main page. As shown in the picture above, the following objects are available. From left to right they are: Static Text, ASCII Display, Static Bitmap, Scale, Bar Graph, Button, Clock Display, Multi-state bit map, Units, Numeric Input, the 11 geometric bitmaps, and lines of different widths. Use the same steps to add Static Text, Static Bitmap, and geometric bitmaps as for the start-up page.

3. Add a numeric / ASCII display. On the toolbar, click the **Numeric / ASCII** button. In the page, double-click the object to specify the **Refer Device**, **Frame Setting**, **Font Setting** and **Alignment**.

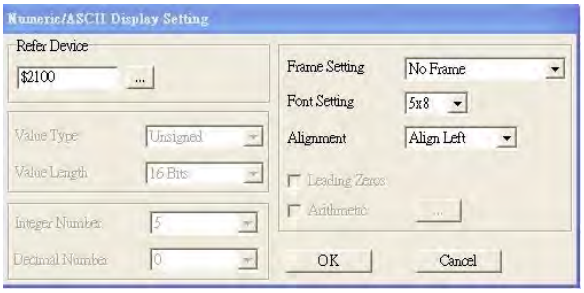

Click **[…]**. In the **Refer Device** dialog box, choose the VFD communication port that you need. If you want to read the output frequency (H), set the **Absolute Addr.** to 2202. For other values, refer to the ACMD Modbus Comm Address List (see Pr.09-04 in Chapter 12 Group 09 Communication Parameters).

4. Scale Setting. On the toolbar, click to add a scale. You can also edit the Scale Setting in the Property Window on the right-hand side of your computer screen.

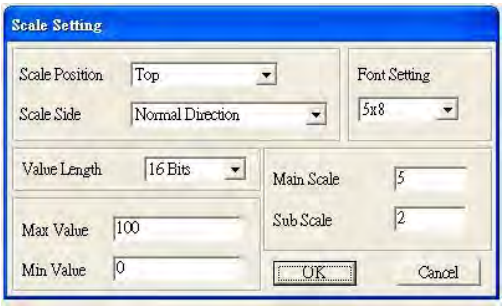

a. **Scale Position**: specifies where to place the scale.

b. **Scale Side**: specifies whether the scale is numbered from smaller numbers to larger numbers or from larger to smaller.

c. **Font Setting**: specifies the font.

d. **Value Length**: specifies 16 bits or 32 bits.

e. **Main Scale & Sub-Scale**: divides the whole scale into equal parts; enter the numbers for the main scale and sub-scale.

f. **Max Value & Min Value**: specifies the numbers on the two ends of the scale. They can be negative numbers, but the maximum and minimum values are limited by the **Value Length** setting. For example, when **Value Length** is **hexadecimal** (**16 bits**), the maximum and the minimum value cannot be entered as -40000.

Clicking **OK** creates a scale as in the picture below.

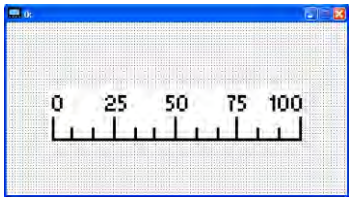

5. Bar Graph setting. On the toolbar, click to add a bar graph.

a. **Refer Device**: specifies the VFD communication port.

b. **Direction Setting**: specifies the direction: **From Bottom to Top**, **From Top to Bottom**, **From Left to Right** or **From Right to Left**.

c. **Max Value** and **Min Value**: specifies the maximum value and minimum value. A value smaller than or equal to the minimum value causes the bar graph to be blank (0). A value is bigger or equal to the maximum value causes the bar graph is full (100%). A value between the minimum and maximum values causes the bar graph to be filled proportionally.

6. Button: on the toolbalr, click . Currently this function only allows the keypad to switch pages; other functions are not yet available (including text input and insert image). In the blank page, double-click to open the Button Setting dialog box.

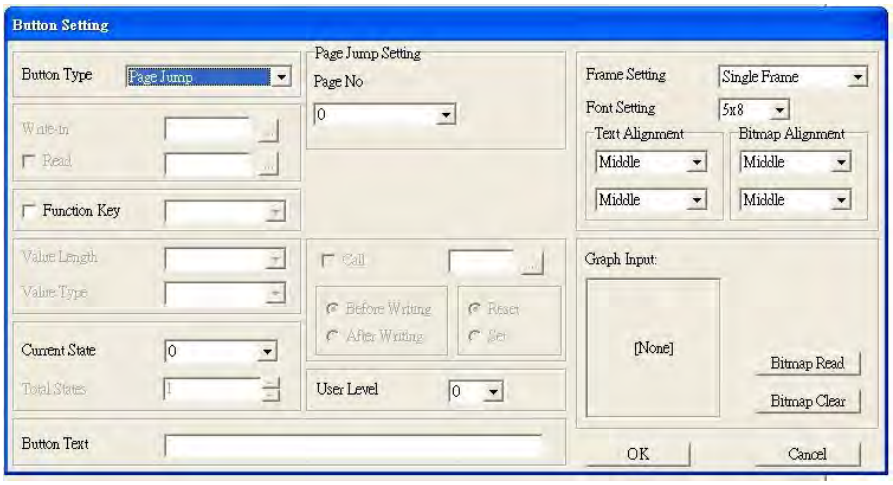

Button Type: specifies the button's functions.

Page Jump and **Constant Setting** are the only functions currently supported.

A. Page Jump Setting

- **Page Jump Setting**: in the **Button Type** list, choose **Page Jump** to show the **Page Jump Setting**.
- **Function Key**: specifies the functions for the following keys on the KPC-CC01 keypad: F1, F2, F3, F4, Up, Down, Left and Right. Note that the Up and Down keys are locked by TPEditor. You cannot program these two keys. If you want to program Up and Down keys, on the **Tool** menu, click **Function Key Setting**, and then click **Re-Define Up / Down Key**.

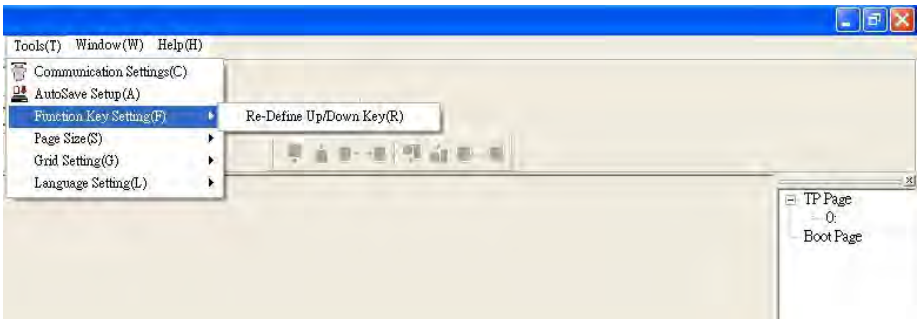

- **Button Text**: specifies the text that appears on a button. For example, when you enter Next Page for the button text, that text appears on the button.

B. Constant Setting

This function specifies the memory address' values for the VFD or PLC. When you press the **Function Key**, it writes a value to the memory address specified by the value for **Constant Setting**. You can use this function to initialize a variable.

7. **Clock Display Setting**: on the toolbar, click . You can display the time, day, or date on the keypad.

   Open a new page and click once in that window to add a clock display.

   Choose to display **Time**, **Day**, or **Date** on the keypad. To adjust time, go to #8 on the keypad's menu. You can also specify the **Frame Setting**, **Font Setting**, and **Alignment**.

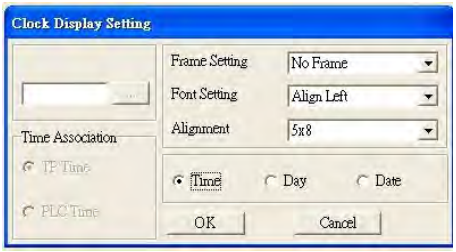

8. Multi-state bitmap: on the toolbar, click . Open a new page and click once in that window to add a Multi-state bitmap. This object reads a bit's property value from the PLC. It defines the image or text that appears when this bit is 0 or 1. Set the initial status (**Current State**) to be 0 or 1 to define the displayed image or text.

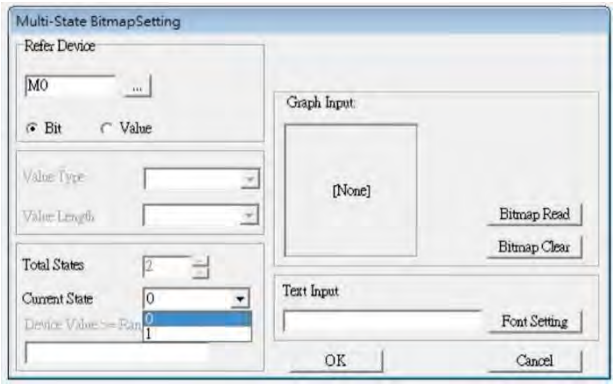

9. Unit Measurement: on the toolbar, click .

Open a new blank page, and double-click on that window to display the **Units Setting** dialog box. Choose the **Metrology Type** and the **Unit Name**. For **Metrology**, the choices are Length, Square Measure, Volume/Solid Measure, Weight, Speed, Time, and Temperature. The unit name changes automatically when you change metrology type.

10. Numeric Input Setting: on the toolbar, click .

This object enables you to provide parameters or communication ports (0x22xx) and to input numbers. Open a new file and double click on that window to display the **Numeric Input Setting** dialog box.

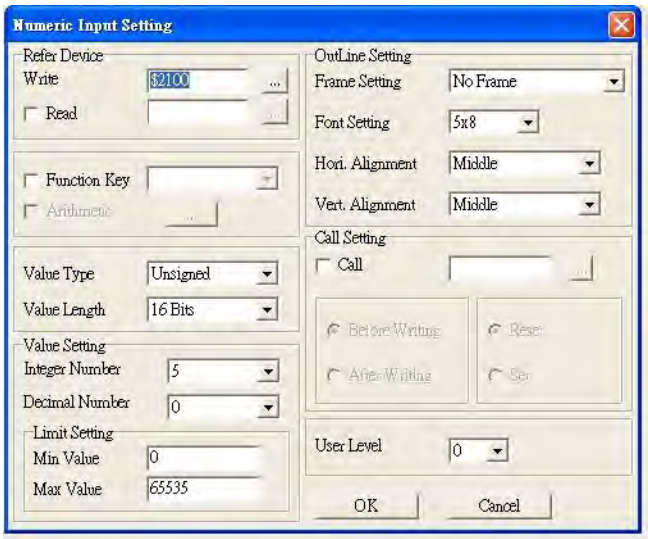

a. **Refer Device**: specifies the **Write** and the **Read** values. Enter the numbers to display and the corresponding parameter and communication port numbers. For example, enter 012C to Read and Write Parameter Pr.01-44.

b. **OutLine Setting**: specifies the **Frame Setting**, **Font Setting**, **Hori. Alignment**, and **Vert. Alignment** for the outline.

c. **Function Key**: specifies the function key to program on the keypad in the **Function Key** box. The corresponding key on the keypad starts to blink. Press ENTER to confirm the setting.

d. **Value Type** and **Value Length**: specify the range of the **Min Value** and **Max Value** for the **Limit Setting**. Note that the corresponding supporting values for C2000-HS must be 16 bits. 32-bit values are not supported.

e. **Value Setting**: automatically set by the keypad itself.

f. **Limit Setting**: specifies the range for the numeric input here.

For example, if you set **Function Key** to **F1**, **Min Value** to 0 and **Max Value** to 4, when you press F1 on the keypad, then you can press Up/Down on the keypad to increase or decrease the value. Press ENTER on the keypad to confirm your setting. You can also view the parameter table 01-44 to verify if you correctly entered the value.

11. Download the TP page. Press Up/Down on the keypad to select #13 PC Link.

Then press ENTER on the keypad. The screen displays “Waiting”. In TPEditor, choose a page that you have created, and then on the **Communication** menu click **Write to TP** to start downloading the page to the keypad

When you see “Completed” on the keypad screen, the download is finished. You can then press ESC on the keypad to go back to the menu screen.

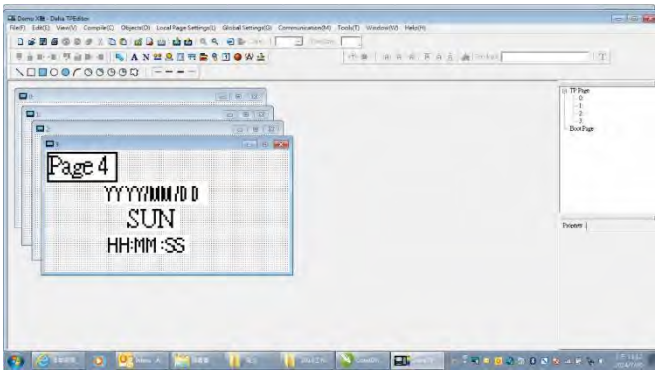

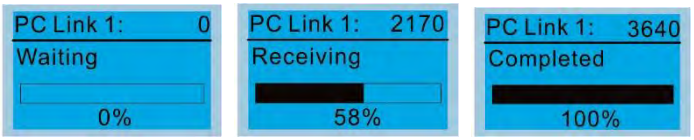

10-4 Digital Keypad KPC-CC01 Fault Codes and Descriptions

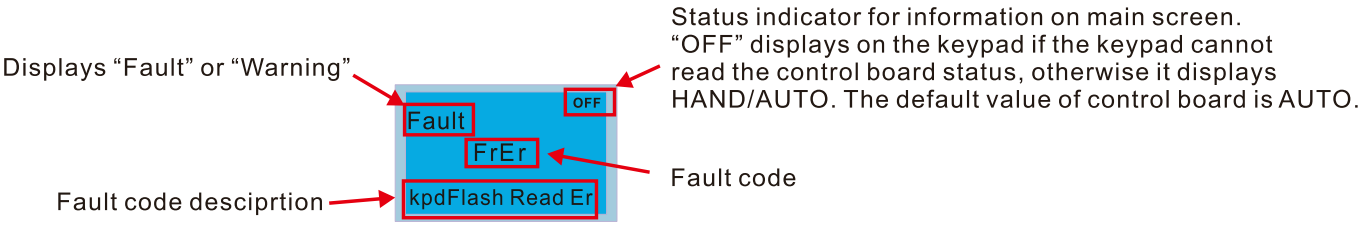

Fault Codes

LCD Display *	Fault Name	Description	Corrective Actions
AUTO Fault FrEr kpd Flash Read Er	Flash memory read error (FrEr)	Keypad flash memory read error	Error in the keypad’s flash memory. 1. Press RESET to clear the errors. 2. Check for any problem on Flash IC. 3. Shut down the system, wait for ten minutes, and then restart the system. If none of the above solutions works, contact your authorized local dealer for assistance.
AUTO Fault FsEr kpd Flash Save Er	Flash memory save error (FsEr)	Keypad flash memory save error	Error in the keypad’s flash memory. 1. Press RESET to clear the errors. 2. Check for any problem on Flash IC. 3. Shut down the system, wait for ten minutes, and then restart the system. If none of the above solutions works, contact your authorized local dealer for assistance.
AUTO Fault FPEr kpd Flash Pr Er	Flash memory parameter error (FPEr)	Keypad flash memory parameter error	Error in the default parameters. It might be caused by a firmware update. 1. Press RESET to clear the errors. 2. Check for any problem on Flash IC. 3. Shut down the system, wait for ten minutes, and then restart the system. If none of the above solutions works, contact your local authorized dealer for assistance.
AUTO Fault VFDr Read VFD Info Er	Reading AC motor drive data error (VFDr)	Keypad error when reading AC motor drive data	Keypad cannot read any data sent from the drive. 1. Verify that the keypad is properly connected to the motor drive by a communication cable such as RJ45. 2. Press RESET to clear the errors. 3. Shut down the system, wait for ten minutes, and then restart the system. If none of the above solutions works, contact your local authorized dealer for assistance.
AUTO Fault CPUEr CPU Error	CPU error (CPUEr)	Keypad CPU error	A serious error in the keypad’s CPU. 1. Check for any problem on CPU clock. 2. Check for any problem on Flash IC. 3. Check for any problem on RTC IC. 4. Verify that the communication quality of the RS-485 cable is good. 5. Shut down the system, wait for ten minutes, and then restart the system. If none of the above solutions works, contact your local authorized dealer for assistance.

Warning Codes

LCD Display *	Warning Name	Description	Corrective Actions
AUTO Warning CE1 Comm. Error 1	Commuication error 1 (CE1)	Modbus function code error	Motor drive does not accept the communication command sent from the keypad. 1. Verify that the keypad is properly connected to the motor drive by a communication cable such as RJ45. 2. Press RESET to clear the errors. If none of the above solutions works, contact your local authorized dealer for assistance.
AUTO Warning CK1 Comm Command Er	Communication command error 1 (CK1)	Digital keypad function code error (The keypad automatically detects and shown this warning)	Keypad does not accept the motor drive's communication command. 1. Remove the keypad and reconnect it. 2. Verify if the Baud rate = 19200 bps, and the Format = RTU8, N, 2 3. Verify if the keypad is properly connected to the motor drive on the communication contact by a communication cable such as RJ45. If none of the above solution works, contact your local authorized dealer.
AUTO Warning CE2 Comm. Error 2	Communication error 2 (CE2)	Modbus data address error	Motor drive does not accept the keypad's communication address. 1. Verify that the keypad is properly connected to the motor drive by a communication cable such as RJ45. 2. Press RESET to clear the errors. If none of the above solutions works, contact your local authorized dealer for assistance.
AUTO Warning CK2 Comm Address Er	Communication address error (CK2)	Digital keypad data address error (The keypad automatically detects and shown this warning)	Keypad does not accept the motor drive's communication command. 1. Remove the keypad and reconnect it. 2. Verify if the Baud rate = 19200 bps, and the Format = RTU8, N, 2 3. Verify if the keypad is properly connected to the motor drive on the communication contact by a communication cable such as RJ45. If none of the above solution works, contact your local authorized dealer.
AUTO Warning CE3 Comm. Error 3	Communication error 3 (CE3)	Modbus data value error	Motor drive does not accept the communication data sent from the keypad. 1. Verify that the keypad is properly connected to the motor drive by a communication cable such as RJ45. 2. Press RESET to clear the errors. If none of the above solution works, contact your local authorized dealer for assistance.
AUTO Warning CK3 Comm Data Error	Communication data error (CK3)	Digital keypad data value error (The keypad automatically detects and shown this warning)	Keypad does not accept the motor drive's communication command. 1. Remove the keypad and reconnect it. 2. Verify if the Baud rate = 19200 bps, and the Format = RTU8, N, 2 3. Verify if the keypad is properly connected to the motor drive on the communication contact by a communication cable such as RJ45. If none of the above solution works, contact your local authorized dealer.

LCD Display *	Warning Name	Description	Corrective Actions
AUTO Warning CE4 Comm. Error 4	Communication error 4 (CE4)	Modbus slave drive error	Motor drive cannot process the communication command sent from the keypad. 1. Verify that the keypad is properly connected to the motor drive by a communication cable such as RJ45. 2. Press RESET to clear the errors. 3. Shut down the system, wait for ten minutes, and then restart the system. If none of the above solutions works, contact your local authorized dealer for assistance.
AUTO Warning CK4 Comm Slave Error	Communication slave error (CK4)	Digital keypad slave drive error (The keypad automatically detects and shown this warning)	Keypad does not accept the motor drive's communication command. 1. Remove the keypad and reconnect it. 2. Verify if the Baud rate = 19200 bps, and the Format = RTU8, N, 2 3. Verify if the keypad is properly connected to the motor drive on the communication contact by a communication cable such as RJ45. If none of the above solution works, contact your local authorized dealer.
AUTO Warning CE10 Comm. Error 10	Communication error 10 (CE10)	Modbus transmission time-Out	Motor drive does not respond to the communication command sent from the keypad. 1. Verify that the keypad is properly connected to the motor drive by a communication cable such as RJ45. 2. Press RESET to clear the errors. 3. Shut down the system, wait for ten minutes, and then restart the system. If none of the above solutions works, contact your local authorized dealer for assistance.
AUTO Warning CK10 KpdComm Time Out	Keypad communication time out (CK10)	Digital keypad transmission time-out (The keypad automatically detects and shown this warning)	Keypad does not accept the motor drive's communication command. 1. Remove the keypad and reconnect it. 2. Verify if the Baud rate = 19200 bps, and the Format = RTU8, N, 2 3. Verify if the keypad is properly connected to the motor drive on the communication contact by a communication cable such as RJ45. If none of the above solution works, contact your local authorized dealer.
AUTO Warning TPNO TP No Object	TP object not defined (TPNO)	Object not supported by TPEditor	If none of the above solution works, contact your local authorized dealer. Keypad's TPEditor uses an unsupported object. 1. Verify that the TPEditor is not using an unsupported object or setting. Delete unsupported objects and unsupported settings. 2. Re-edit the object in the TPEditor, and then download it to the keypad. 3. Verify if the drive supports TP function. If it does not support TP function, the setting page displays Default. If none of the above solutions works, contact your local authorized dealer for assistance.

NOTE:

The warning code CExx only occurs when the communication problem is between the drive and the keypad. It has nothing to do with the drive and other devices. Note the warning code description to find the cause of the error if CExx appears.

File Copy Setting Fault Description:

These faults occur when KPC-CC01 cannot perform the command after clicking the ENTER key in the copy function.

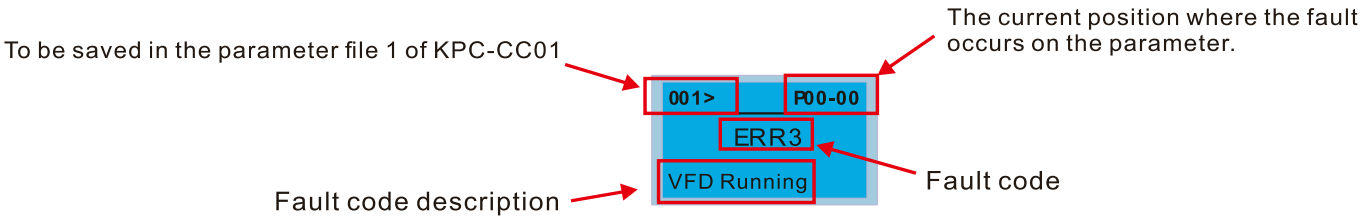

LCD Display *	Fault Name	Description	Corrective Actions
001> P00-00 ERR1 Read Only	Read only (ERR1)	Parameter and file are read only	The parameter/file is read-only and cannot be written to. 1. Verify the specification in the user manual. If this solution does not work, contact your local authorized dealer for assistance.
001> P00-00 ERR2 Write Fail	Write in error (ERR2)	Fail to write parameter and file	An error occurred while writing to a parameter/file. 1. Check for any problem on Flash IC. 2. Shut down the system, wait for ten minutes, and then restart the system. If this solution does not work, contact your local authorized dealer for assistance.
001> P00-00 ERR3 VFD Running	Drive operating (ERR3)	AC motor drive is in operating status	A setting cannot be changed while the motor drive is in operation. 1. Verify that the drive is not in operation. If this solution does not work, contact your local authorized dealer for assistance.
001> P00-00 ERR4 Pr Lock	Parameter locked (ERR4)	AC motor drive parameter is locked	A setting cannot be changed because a parameter is locked. 1. Check if the parameter is locked. If it is locked, unlock it and try to set the parameter again. If this solution does not work, contact your local authorized dealer for assistance.
001> P00-00 ERR5 Pr Changing	Parameter changing (ERR5)	AC motor drive parameter is changing	A setting cannot be changed because a parameter is being modified. 1. Check if the parameter is being modified. If it is not being modified, try to change that parameter again. If this solution does not work, contact your local authorized dealer for assistance.
001> P00-00 ERR6 Fault Code	Fault code (ERR6)	Fault code is not cleared	A setting cannot be changed because an error has occurred in the motor drive. 1. Check if an error occurred in the motor dive. If there is no error, try to change the setting again. If this solution does not work, contact your local authorized dealer for assistance.
001> P00-00 ERR7 Warning Code	Warning code (ERR7)	Warning code is not cleared	A setting cannot be changed because of a warning message given to the motor drive. 1. Check if there is a warning message given to the motor drive. If this solution does not work, contact your local authorized dealer for assistance.

LCD Display *	Fault Name	Description	Corrective Actions
001> P00-00 ERR8 Type Mismatch	File type mismatch (ERR8)	File type mismatch	Data to be copied are not the correct type, so the setting cannot be changed. 1. Check if the products' serial numbers to be copied are in the same category. If they are in the same category, try to copy the setting again. If this solution does not work, contact your authorized dealer for assistance.
001> P00-00 ERR9 Password Lock	Password locked (ERR9)	File is locked with password	A setting cannot be changed because some data are locked. 1. Check if the data are unlocked or able to be unlocked. If the data are unlocked, try to change the setting again. 2. Shut down the system, wait for ten minutes, and then restart the system. If none of the above solutions works, contact your authorized dealer for assistance.
001> P00-00 ERR10 Password Fail	Password fail (ERR10)	File password mismatch	A setting cannot be changed because the password is incorrect. 1. Check if the password is correct. If the password is correct, try to change the setting again. 2. Shut down the system, wait for ten minutes, and then restart the system. If none of the above solutions works, contact your authorized dealer for assistance.
001> P00-00 ERR11 Version Fail	Version fail (ERR11)	File version mismatch	A setting cannot be changed because the version of the data is incorrect. 1. Check if the version of the data matches the motor drive. If it matches, try to change the setting again. If this solution does not work, contact your authorized dealer for assistance.
001> P00-00 ERR12 VFD Time Out	VFD Time out (ERR12)	AC motor drive copy function time-out	A setting cannot be changed because the data copying time-out expired. 1. Try copying the data again. 2. Check if copying data is authorized. If it is authorized, try to copy the data again. 3. Shut down the system, wait for ten minutes, and then restart the system. If none of the above solutions works, contact your authorized dealer for assistance.

NOTE: The content in this section only applies to the KPC-CC01 keypad V1.01 and later versions.

10-5 Unsupported Functions when Using TPEditor with the KPC-CC01

1. **Local Page Setting** and **Global Setting** functions are not supported.

2. In the **Communication** menu, **Read from TP** function is not supported.

3. In the **RTC Display Setting**, you cannot change the **Refer Device**.

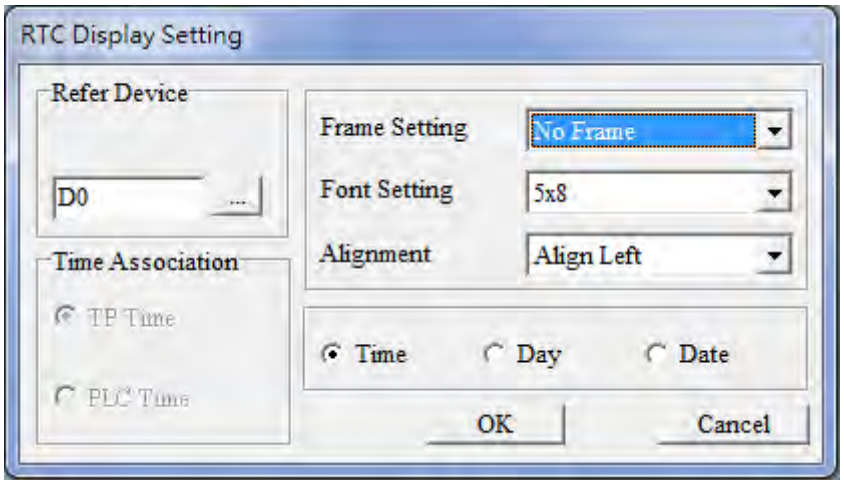

Chapter 11 Summary of Parameter Settings

00 Drive Parameters

01 Basic Parameters

02 Digital Input / Output Parameters

03 Analog Input / Output Parameters

04 Multi-step Speed Parameters

05 Motor Parameters

06 Protection Parameters

07 Special Parameters

08 High-function PID Parameters

09 Communication Parameters

10 Speed Feedback Control Parameters

11 Advanced Parameters

13 Application Parameters by Industry

14 Extension Card Parameter

This chapter provides summary of parameter settings for user to gather the parameter setting ranges, factory settings and set parameters. The parameters can be set, changed and reset by the digital keypad.

NOTE:

1. ✓: the parameter can be set during operation
2. For more detail on parameters, please refer to Ch12 Description of Parameter Settings.
3. The following are abbreviations for different types of motors:
   - IM: Induction motor
   - PM: Permanent magnet synchronous AC motor
   - IPM: Interior permanent magnet synchronous AC motor
   - SPM: Surface permanent magnet synchronous AC motor

00 Drive Parameters

Pr.	Parameter Name	Setting Range	Default
00-00	AC Motor Drive Identity Code	4: 230V, 0.75 kW 5: 460V, 0.75 kW 6: 230V, 1.50 kW 7: 460V, 1.50 kW 8: 230V, 2.20 kW 9: 460V, 2.20 kW 10: 230V, 3.70 kW 11: 460V, 3.70 kW 12: 230V, 5.50 kW 13: 460V, 5.50 kW 14: 230V, 7.50 kW 15: 460V, 7.50 kW 16: 230V, 11.0 kW 17: 460V, 11.0 kW 18: 230V, 15.0 kW 19: 460V, 15.0 kW 20: 230V, 18.5 kW 21: 460V, 18.5 kW 22: 230V, 22.0 kW 23: 460V, 22.0 kW 24: 230V, 30.0 kW 25: 460V, 30.0 kW 26: 230V, 37.0 kW 27: 460V, 37.0 kW 28: 230V, 45.0 kW 29: 460V, 45.0 kW 30: 230V, 55.0 kW	Read only

	Pr.	Parameter Name	Setting Range	Default
			31: 460V, 55.0 kW 32: 230V, 75.0 kW 33: 460V, 75.0 kW 35: 460V, 90.0 kW 37: 460V, 110.0 kW 39: 460V, 132.0 kW 41: 460V, 160.0 kW 43: 460V, 185.0 kW 45: 460V, 220.0 kW 47: 460V, 280.0 kW 49: 460V, 315.0 kW 51: 460V, 355.0 kW 55: 460V, 450.0 kW 488: 460V, 37.0 kW 489: 460V, 45.0 kW 490: 460V, 55.0 kW 491: 460V, 75.0 kW	
	00-01	AC Motor Drive Rated Current Display	Display by models	Read only
✓	00-02	Parameter Reset	0: No function 1: Write protection for parameters 5: Return kWh displays to 0 6: Reset PLC (including CANopen Master Index) 7: Reset CANopen Slave index 9: Reset all parameters to defaults (base frequency is 50 Hz) 10: Reset all parameters to defaults (base frequency is 60 Hz)	0
✓	00-03	Start-Up Display	0: F (frequency command) 1: H (output frequency) 2: U (multi-function, see Pr.00-04) 3: A (output current)	0
✓	00-04	Content of Multi-Function Display (User-Defined)	0: Display output current (A) (Unit: Amp) 1: Display counter value (c) (Unit: CNT) 2: Display the motor's actual output frequency (H.) (Unit: Hz) 3: Display the drive's DC bus voltage (v) (Unit: V_{DC}) 4: Display the drive's output voltage (E) (Unit: V_{AC}) 5: Display the drive's output power angle (n) (Unit: deg)	3

Pr.	Parameter Name	Setting Range	Default
		6: Display the drive's output power (P) (Unit: kW) 7: Display the motor speed rpm (r) (Unit: rpm) 8: Display the drive's estimated output torque, motor's rated torque is 100% (t) (Unit: %) 9: Display PG feedback (G) (refer to Pr.10-00 and Pr.10-01) (Unit: PLS) 10: Display PID feedback (b) (Unit: %) 11: Display AVI analog input terminal signal (1.) (Unit: %) 12: Display ACI analog input terminal signal (2.) (Unit: %) 13: Display AUI analog input terminal signal (3.) (Unit: %) 14: Display the drive's IGBT temperature (i.) (Unit: °C) 15: Display the drive's capacitance temperature (c.) (Unit: °C) 16: The digital input status (ON/OFF) (i) 17: The digital output status (ON/OFF) (o) 18: Display multi-step speed (S) 19: The corresponding CPU digital input pin status (d) 20: The corresponding CPU digital output pin status (0.) 21: Actual motor position (PG1 of PG card) (P.) The maximum value is 32bits display 22: Pulse input frequency (PG2 of PG card) (S.) 23: Pulse input position (PG2 of PG card) (q.) The maximum value is 32bits display 24: Position command tracing error (E.) 25: Overload count (0.00–100.00%) (o.) (Unit: %) 26: Ground fault GFF (G.) (Unit :%) 27: DC bus voltage ripple (r.) (Unit: V_{DC}) 28: Display PLC register D1043 data (C) 29: Display PM pole section (EMC-PG01U application) (4.) 30: Display the output of user defined (U) 31: Display Pr.00-05 user gain (K) 32: Number of actual motor revolution during operation (PG card plug in and Z phase signal	

Pr.	Parameter Name	Setting Range	Default
		input) (Z.) 34: Operation speed of fan (F.) (Unit: %) 35: Control mode display: 0 = Speed control mode (SPD) 1= Torque control mode (TQR) (t.) 36: Present operating carrier frequency of the drive (J.) (Unit: Hz) 38: Display the drive status (6.) 39: Display the drive's estimated output torque, positive and negative, using Nt-m as unit (t 0.0: positive torque; -0.0: negative torque (C.) 40: Torque Command (L) (Unit: %) 41: kWh display (J) (Unit: kWh) 42: PID target value (h.) (Unit: %) 43: PID compensation (o.) (Unit: %) 44: PID output frequency (b.) (Unit: Hz) 45: Hardware ID 46: Auxiliary frequency value (U.) (Unit: Hz) 47: Master frequency value (A.) (Unit: Hz) 48: Frequency value after addition and subtraction of master and auxiliary frequency (L.) (Unit: Hz) 49: Motor temperature (KTY84-130 only) 51: PMSVC torque offset 52: AI10% 53: AI11% 54: PMFOC Ke estimation value 68: STO version (d) 69: STO checksum-high word (d) 70: STO checksum-low word (d)	
00-05	Coefficient Gain in Actual Output Frequency	0.00–160.00	1.00
00-06	Firmware Version	Read only	Read only
00-07	Parameter Protection Password Input	0–65535 0–4: the number of password attempts allowed	0
00-08	Parameter Protection Password Setting	0–65535 0: No password protection or password entered correctly (Pr.00-07) 1: Parameter has been set	0

<table>
<tr><th></th><th>Pr.</th><th>Parameter Name</th><th>Setting Range</th><th>Default</th></tr>
<tr><td>✓</td><td>00-10</td><td>Control Mode</td><td>0: Speed control mode
1: Position control mode
2: Torque mode</td><td>0</td></tr>
<tr><td></td><td>00-11</td><td>Speed Control Mode</td><td>0: IMVF (IM V/F control)
1: IMVFPG (IM V/F control + Encoder)
2: IM / PM / SynRM SVC (IM / PM / SynRM space vector control)
3: IMFOCPG (IM FOC + Encoder)
4: PMFOCPG (PM FOC + Encoder)
5: IMFOC sensorless (IM field-oriented sensorless vector control)
6: PM sensorless (PM field-oriented sensorless vector control)
7: IPM sensorless (Interior PM field-oriented sensorless vector control)
8: SynRM sensorless control</td><td>0</td></tr>
<tr><td></td><td>00-12</td><td>Point-to-Point Position Mode</td><td>0: Increment point-to-point positioning
1: Absolute point-to-point positioning</td><td>0</td></tr>
<tr><td></td><td>00-13</td><td>Torque Mode Control</td><td>0: IM TQCPG (IM torque control + encoder)
1: PM TQCPG (PM torque control + encoder)
2: IM TQC Sensorless (IM Sensorless torque control)
4: SynRM TQC Sensorless (SynRM sensorless torque control)</td><td>0</td></tr>
<tr><td>✓</td><td>00-16</td><td>Duty Selection</td><td>3: Super heavy duty</td><td>3</td></tr>
<tr><td></td><td>00-17</td><td>Carrier Frequency (kHz)</td><td>230V Model
<table>
<tr><th>230V</th><th>VF, SVC</th><th>VFPG</th><th>IMFOCPG IMTQCPG</th><th>PMFOCPG PMTQCPG</th><th>PMFOC IPMFOC</th><th>IMFOCI MTQC</th><th>SRM FOC*</th></tr>
<tr><td>1–15 HP</td><td>2–15</td><td>2–10</td><td>2–8</td><td>4–8</td><td>4–10</td><td>4–12</td><td>4–8</td></tr>
<tr><td>20–100 HP</td><td>2–15</td><td>2–10</td><td>2–8</td><td>4–8</td><td>4–10</td><td>4–12</td><td>4–8</td></tr>
</table>
* The default is 4 kHz under SRMFOC mode.</td><td>8
6</td></tr>
<tr><td></td><td></td><td></td><td>460V Model
<table>
<tr><th>460V</th><th>VF, SVC</th><th>VFPG</th><th>IMFOCPG IMTQCPG</th><th>PMFOCPG PMTQCPG</th><th>PMFOC IPMFOC</th><th>IMFOC IMTQC</th><th>SRM FOC*</th></tr>
<tr><td>1–20 HP</td><td>2–15</td><td>2–10</td><td>2–8</td><td>4–8</td><td>4–10</td><td>4–12</td><td>4–8</td></tr>
<tr><td>25–100 HP</td><td>2–15</td><td>2–10</td><td>2–8</td><td>4–8</td><td>4–10</td><td>4–12</td><td>4–8</td></tr>
<tr><td>125–600HP</td><td>2–10</td><td>2–10</td><td>2–8</td><td>4–8</td><td>4–10</td><td>4–10</td><td>4–8</td></tr>
</table>
* The default is 4 kHz under SRMFOC mode.</td><td>8
6
4</td></tr>
<tr><td></td><td>00-19</td><td>PLC Command Mask</td><td>bit 0: Control command is forced by PLC control
bit 1: Frequency command is forced by PLC control
bit 2: Position command is forced by PLC control</td><td>Read only</td></tr>
</table>

	Pr.	Parameter Name	Setting Range	Default
			bit 3: Torque command is forced by PLC control	
	00-20	Master Frequency Command Source (AUTO) / Source Selection of the PID Target	0: Digital keypad 1: RS-485 communication input 2: External analog input (Pr.03-00–03-02) 3: External UP / DOWN terminal (multi-function input terminals) 4: Pulse input without direction command (refer to Pr.10-16 without considering direction), use with PG card 5: Pulse input with direction command (refer to Pr.10-16), use with PG card 6: CANopen communication card 8: Communication card (does not include CANopen card) 9: PID controller	0
	00-21	Operation Command Source (AUTO)	0: Digital keypad 1: External terminals 2: RS-485 communication input 3: CANopen communication card 5: Communication card (does not include CANopen card)	0
✓	00-22	Stop Method	0: Ramp to stop 1: Coast to stop	0
✓	00-23	Motor Direction Control	0: Enable forward / reverse 1: Disable reverse 2: Disable forward	0
	00-24	Digital Operator (Keypad) Frequency Command Memory	Read only	Read only
✓	00-25	User Defined Characteristics	bit 0–3: user-defined decimal place 0000b: no decimal place 0001b: one decimal place 0010b: two decimal places 0011b: three decimal places bit 4–15: user-define on unit 000xh: Hz 001xh: rpm 002xh: % 003xh: kg 004xh: m/s 005xh: kW	0

Pr.	Parameter Name	Setting Range	Default
		006xh: HP 007xh: ppm 008xh: 1/m 009xh: kg/s 00Axh: kg/m 00Bxh: kg/h 00Cxh: lb/s 00Dxh: lb/m 00Exh: lb/h 00Fxh: ft/s 010xh: ft/m 011xh: m 012xh: ft 013xh: degC 014xh: degF 015xh: mbar 016xh: bar 017xh: Pa 018xh: kPa 019xh: mWG 01Axh: inWG 01Bxh: ftWG 01Cxh: psi 01Dxh: atm 01Exh: L/s 01Fxh: L/m 020xh: L/h 021xh: m3/s 022xh: m3/h 023xh: GPM 024xh: CFM xxxxh: Hz	
00-26	Max. User Defined Value	0: Disable 0–65535 (when Pr.00-25 set to no decimal place) 0.0–6553.5 (when Pr.00-25 set to 1 decimal place) 0.0–655.35 (when Pr.00-25 set to 2 decimal place) 0.0–65.535 (when Pr.00-25 set to 3 decimal place)	0
00-27	User-Defined Value	Read only	Read only

Pr.	Parameter Name	Setting Range	Default
00-29	Local / Remote Selection	0: Standard HOA function 1: When switching between local and remote, the drive stops 2: When switching between local remote, the drive runs with REMOTE settings for frequency and operation status 3: When switching between local and remote, the drive runs with LOCAL settings for frequency and operation status 4: When switching between local and remote, the drive runs with LOCAL settings when switched to Local and runs with REMOTE settings when switched to Remote for frequency and operation status	0
00-30	Master Frequency Command Source (HAND)	0: Digital keypad 1: RS-485 communication input 2: External analog input (refer to Pr.03-00–03-02) 3: External UP / DOWN terminal (multi-function input terminals) 4: Pulse input without direction command (refer to Pr.10-16 without considering direction) 5: Pulse input with direction command (refer to Pr.10-16) 6: CANopen communication card 8: Communication card (does not include CANopen card) 9: PID controller	0
00-31	Operation Command Source (HAND)	0: Digital keypad 1: External terminals 2: RS-485 communication input 3: CANopen communication card 5: Communication card (does not include CANopen card)	0
00-32	Digital Keypad STOP Function	0: STOP key disabled 1: STOP key enabled	0
00-33	RPWM Mode Selection	0: Disable 1: RPWM mode 1 2: RPWM mode 2 3: RPWM mode 3	0

	Pr.	Parameter Name	Setting Range	Default
✓	00-34	RPWM Range	0.0–4.0 kHz Pr.00-17 = 4 kHz, 8 kHz: the setting range is 0.0–2.0 kHz Pr.00-17 = 5–7 kHz: the setting range is 0.0–4.0 kHz	0.0
	00-35	Auxiliary Frequency Source	0: Disabled 1: Digital keypad 2: RS-485 communication input 3: Analog input 4: External UP / DOWN key 5: Pulse inputs with direction command (refer to Pr.10-16) 6: CANopen communication card 8: Communication card	0
	00-36	Master and Auxiliary Frequency Command Selection	0: Master + auxiliary frequency 1: Master – auxiliary frequency 2: Auxiliary – master frequency	0
✓	00-37	Over-Modulation Gain	80–120	100
✓	00-48	Display Filter Time (Current)	0.001–65.535 sec.	0.100
✓	00-49	Display Filter Time (Keypad)	0.001–65.535 sec.	0.100
	00-50	Software Version (Date)	Read only	Read only

01 Basic Parameters

	Pr.	Parameter Name	Setting Range	Default
✓	01-00	Maximum Operation Frequency	0.00–599.00 Hz	60.00 / 50.00
✓	01-01	Rated / Base Frequency of Motor 1	0.00–599.00 Hz	60.00 / 50.00
✓	01-02	Rated / Base Output Voltage of Motor 1	230V models: 0.0–255.0 V 460V models: 0.0–510.0 V	200.0 400.0
	01-03	Mid-Point Frequency 1 of Motor 1	0.00–599.00 Hz	3.00
✓	01-04	Mid-Point Voltage 1 of Motor 1	230V models: 0.0–240.0 V 460V models: 0.0–480.0 V	11.0 22.0
	01-05	Mid-Point Frequency 2 of Motor 1	0.00–599.00 Hz	1.50
✓	01-06	Mid-Point Voltage 2 of Motor 1	230V models: 0.0–240.0 V 460V models: 0.0–480.0 V	5.0 10.0
	01-07	Minimum Output Frequency of Motor 1	0.00–599.00 Hz	0.50
✓	01-08	Minimum Output Voltage of Motor 1	230V models: 0.0–240.0V 460V models: 0.0–480.0V	1.0 2.0
	01-09	Start-Up Frequency	0.00–599.00 Hz	0.50
✓	01-10	Output Frequency Upper Limit	0.00–599.00 Hz	599.00
✓	01-11	Output Frequency Lower Limit	0.00–599.00 Hz	0.00
✓	01-12	Acceleration Time 1	Pr.01-45 = 0: 0.00–600.00 sec. Pr.01-45 = 1: 0.00–6000.0 sec. The default of motor drive with 30 HP and above: 60.00 / 60.0	10.00
✓	01-13	Deceleration Time 1	Pr.01-45 = 0: 0.00–600.00 sec. Pr.01-45 = 1: 0.00–6000.0 sec. The default of motor drive with 30 HP and above: 60.00 / 60.0	10.00
✓	01-14	Acceleration Time 2	Pr.01-45 = 0: 0.00–600.00 sec. Pr.01-45 = 1: 0.00–6000.0 sec. The default of motor drive with 30 HP and above: 60.00 / 60.0	10.00
✓	01-15	Deceleration Time 2	Pr.01-45 = 0: 0.00–600.00 sec. Pr.01-45 = 1: 0.00–6000.0 sec. The default of motor drive with 30 HP and above: 60.00 / 60.0	10.00
✓	01-16	Acceleration Time 3	Pr.01-45 = 0: 0.00–600.00 sec. Pr.01-45 =1: 0.00–6000.0 sec. The default of motor drive with 30 HP and above: 60.00 / 60.0	10.00

	Pr.	Parameter Name	Setting Range	Default
✓	01-17	Deceleration Time 3	Pr.01-45 = 0: 0.00–600.00 sec. Pr.01-45 = 1: 0.00–6000.0 sec. The default of motor drive with 30 HP and above: 60.00 / 60.0	10.00
✓	01-18	Acceleration Time 4	Pr.01-45 = 0: 0.00–600.00 sec. Pr.01-45 = 1: 0.00–6000.0 sec. The default of motor drive with 30 HP and above: 60.00 / 60.0	10.00
✓	01-19	Deceleration Time 4	Pr.01-45 = 0: 0.00–600.00 sec. Pr.01-45 = 1: 0.00–6000.0 sec. The default of motor drive with 30 HP and above: 60.00 / 60.0	10.00
✓	01-20	JOG Acceleration Time	Pr.01-45 = 0: 0.00–600.00 sec. Pr.01-45 = 1: 0.00–6000.0 sec. The default of motor drive with 30 HP and above: 60.00 / 60.0	10.00
✓	01-21	JOG Deceleration Time	Pr.01-45 = 0: 0.00–600.00 sec. Pr.01-45 = 1: 0.00–6000.0 sec. The default of motor drive with 30 HP and above: 60.00 / 60.0	10.00
✓	01-22	Jog Frequency	0.00–599.00 Hz	6.00
✓	01-23	Switch Frequency Between First and Fourth Accel. / Decel.	0.00–599.00 Hz	0.00
✓	01-24	S-Curve for Acceleration Begin Time 1	Pr.01-45 = 0: 0.00–25.00 sec. Pr.01-45 = 1: 0.0–250.0 sec.	0.20
✓	01-25	S-Curve for Acceleration Arrival Time 2	Pr.01-45 = 0: 0.00–25.00 sec. Pr.01-45 = 1: 0.0–250.0 sec.	0.20
✓	01-26	S-Curve for Deceleration Begin Time 1	Pr.01-45 = 0: 0.00–25.00 sec. Pr.01-45 = 1: 0.0–250.0 sec.	0.20
✓	01-27	S-Curve for Deceleration Arrival Time 2	Pr.01-45 = 0: 0.00–25.00 sec. Pr.01-45 = 1: 0.0–250.0 sec.	0.20
	01-28	Skip Frequency 1 (Upper Limit)	0.00–599.00 Hz	0.00
	01-29	Skip Frequency 1 (Lower Limit)	0.00–599.00 Hz	0.00
	01-30	Skip Frequency 2 (Upper Limit)	0.00–599.00 Hz	0.00
	01-31	Skip Frequency 2 (Lower Limit)	0.00–599.00 Hz	0.00
	01-32	Skip Frequency 3 (Upper Limit)	0.00–599.00 Hz	0.00
	01-33	Skip Frequency 3 (Lower Limit)	0.00–599.00 Hz	0.00

	Pr.	Parameter Name	Setting Range	Default
	01-34	Zero-Speed Mode	0: Output waiting 1: Zero-speed operation 2: Minimum frequency (Refer to Pr.01-07 and Pr.01-41)	0
✓	01-35	Rated / Base Frequency of Motor 2	0.00–599.00 Hz	60.00 / 50.00
✓	01-36	Rated / Base Output Voltage of Motor 2	230V models: 0.0–255.0 V 460V models: 0.0–510.0 V	200.0 400.0
	01-37	Mid-Point Frequency 1 of Motor 2	0.00–599.00 Hz	3.00
✓	01-38	Mid-Point Voltage 1 of Motor 2	230V models: 0.0–240.0V 460V models: 0.0–480.0V	11.0 22.0
	01-39	Mid-Point Frequency 2 of Motor 2	0.00–599.00 Hz	1.50
✓	01-40	Mid-Point Voltage 2 of Motor 2	230V models: 0.0–240.0V 460V models: 0.0–480.0V	5.0 10.0
	01-41	Minimum Output Frequency of Motor 2	0.00–599.00 Hz	0.50
✓	01-42	Minimum Output Voltage of Motor 2	230V models: 0.0–240.0V 460V models: 0.0–480.0V	1.0 2.0
	01-43	V/F Curve Selection	0: V/F curve determined by Pr.01-00–01-08 1: V/F curve to the power of 1.5 2: V/F curve to the power of 2 3: 60 Hz, voltage saturation in 50 Hz 4: 72 Hz, voltage saturation in 60 Hz 5: 50 Hz, decrease gradually with cube 6: 50 Hz, decrease gradually with square 7: 60 Hz, decrease gradually with cube 8: 60 Hz, decrease gradually with square 9: 50 Hz, medium starting torque 10: 50 Hz, high starting torque 11: 60 Hz, medium starting torque 12: 60 Hz, high starting torque 13: 90 Hz, voltage saturation in 60 Hz 14: 120 Hz, voltage saturation in 60 Hz 15: 180 Hz, voltage saturation in 60 Hz	0
✓	01-44	Auto-Acceleration and Auto-Deceleration Setting	0: Linear acceleration and deceleration 1: Auto-acceleration and linear deceleration 2: Linear acceleration and auto-deceleration 3: Auto-acceleration and auto-deceleration 4: Linear, stall prevention by auto-acceleration and auto-deceleration (limit by Pr.01-12–01-21)	0

	Pr.	Parameter Name	Setting Range	Default
	01-45	Time Unit for Acceleration and Deceleration and S-Curve	0: Unit: 0.01 sec. 1: Unit: 0.1 sec.	0
✓	01-46	Canopen Quick Stop Time	Pr.01-45 = 0: 0.00–600.00 sec. Pr.01-45 = 1: 0.0–6000.0 sec.	1.00
	01-49	Deceleration Method Selection	0: Normal deceleration 1: Over-voltage energy restriction 2: Traction energy control (TEC) 3: Electromagnetic energy traction control	0
✓	01-50	Electromagnetic Traction Energy Consumption Coefficient	0.00–5.00 Hz	0.50
✓	01-51	Flux-Weakening Overload Stall Prevention Time	0.00–600.00 sec.	1.00
	01-52	Zero-Speed Delay Time	0–65535	0
	01-53	Zero-Speed Delay Level	0.00–599.00 Hz	1.00
	01-54	Zero-Speed Delay Time Out	0.00–655.35 sec.	0.00

02 Digital Input / Output Parameters

Pr.	Parameter Name	Setting Range	Default
02-00	Two-Wire / Three-Wire Operation Control	0: Two-wire mode 1, power on for operation control 1: Two-wire mode 2, power on for operation control 2: Three-wire, power on for operation control 7: Single-wire mode, the Servo ON terminal under position control mode (only the FWD terminal is valid)	0
02-01	Multi-Function Input Command 1 (MI1)	0: No function 1: Multi-step speed command 1 / multi-step position command 1 2: Multi-step speed command 2 / multi-step position command 2 3: Multi-step speed command 3 / multi-step position command 3 4: Multi-step speed command 4 / multi-step position command 4 5: Reset 6: JOG operation (by external control or KPC-CC01) 7: Acceleration / deceleration speed inhibit 8: 1st and 2nd acceleration / deceleration time selection 9: 3rd and 4th acceleration / deceleration time selection 10: External Fault (EF) input (Pr.07-20) 11: Base Block (B.B.) input from external 12: Output voltage stops 13: Cancel the setting of auto-acceleration / auto-deceleration time 14: Switch between motor 1 and motor 2 15: Rotating speed command from AVI 16: Rotating speed command from ACI 17: Rotating speed command from AUI 18: Forced to stop (Pr.07-20) 19: Frequency up command 20: Frequency down command 21: PID function disabled 22: Clear the counter	1
02-02	Multi-Function Input Command 2 (MI2)		2
02-03	Multi-Function Input Command 3 (MI3)		3
02-04	Multi-Function Input Command 4 (MI4)		4
02-05	Multi-Function Input Command 5 (MI5)		0
02-06	Multi-Function Input Command 6 (MI6)		0
02-07	Multi-Function Input Command 7 (MI7)		0
02-08	Multi-Function Input Command 8 (MI8)		0
02-26	Input Terminal of I/O Extension Card (MI10)		0
02-27	Input Terminal of I/O Extension Card (MI11)		0
02-28	Input Terminal of I/O Extension Card (MI12)		0
02-29	Input Terminal of I/O Extension Card (MI13)		0
02-30	Input Terminal of I/O Extension Card (MI14)		0
02-31	Input Terminal of I/O Extension Card (MI15)		0

Pr.	Parameter Name	Setting Range	Default
		23: Input the counter value (MI6) 24: FWD JOG command 25: REV JOG command 26: TQC / FOC mode selection 27: ASR1 / ASR2 selection 28: Emergency stop (EF1) 29: Signal confirmation for Y-connection 30: Signal confirmation for Δ-connection 31: High torque bias (Pr.11-30) 32: Middle torque bias (Pr.11-31) 33: Low torque bias (Pr.11-32) 35: Enable single-point positioning 36: Enable multi-step position teaching function (valid at stop) 37: Enable pulse-train position command position control 38: Disable write EEPROM function 39: Torque command direction 40: Force coasting to stop 41: HAND switch 42: AUTO switch 43: Enable resolution selection (Pr.02-48) 44: Negative limit switch (NL) 45: Positive limit switch (PL) 46: Homing (ORG) 47: Enable homing function 48: Mechanical gear ratio switch 49: Enable drive 50: Slave dEb action to execute 51: Selection for PLC mode bit 0 52: Selection for PLC mode bit 1 53: Trigger CANopen quick stop 55: Brake release 56: Local / Remote selection 70: Force auxiliary frequency return to 0 71: Disable PID function, force PID output return to 0 72: Disable PID function, retain the output value before disabled	

	Pr.	Parameter Name	Setting Range	Default
			73: Force PID intrgral gain return to 0, disable integral 74: Reverse PID feedback 88: Multi-step position confirm 89: Speed / position control mode switch: 0: Speed mode 1: Position mode 90: Position command source switch 0: Inputs from internal register 1: Inputs from external pulse 95: Multi speed limit 1 96: Multi speed limit 2 97: Multi speed limit 3 98: Multi speed limit 4	
✓	02-09	External UP / DOWN Key Mode	0: By acceleration /deceleration time 1: Constant speed (Pr.02-10)	0
✓	02-10	External Terminal Speed of The UP / DOWN Key	0.001–1.000 Hz/ms	0.001
✓	02-11	Multi-Function Input Response Time	0.000–30.000 sec.	0.005
✓	02-12	Multi-Function Input Mode Selection	0000h–FFFFh (0: N.O.; 1: N.C.)	0000h
✓	02-13	Multi-Function Output 1 (Relay 1)	0: No function 1: Indication during RUN 2: Operation speed reached 3: Desired frequency reached 1 (Pr.02-22) 4: Desired frequency reached 2 (Pr.02-24) 5: Zero speed (Frequency command) 6: Zero speed including STOP (Frequency command) 7: Over-torque 1(Pr.06-06–06-08) 8: Over-torque 2 (Pr.06-09–06-11) 9: Drive is ready 10: Low voltage warning (Lv) (Pr.06-00) 11: Malfunction indication 12: Mechanical brake release (Pr.02-32) 13: Overheat warning (Pr.06-15) 14: Software brake signal indication (Pr.07-00) 15: PID feedback error (Pr.08-13, Pr.08-14) 16: Slip error (oSL) 17: Count value reached, does not return to 0 (Pr.02-20)	11
✓	02-14	Multi-Function Output 2 (Relay 2)		1
✓	02-16	Multi-Function Output 3 (MO1)		0
✓	02-17	Multi-Function Output 4 (MO2)		66
✓	02-36	Output Terminal of I/O Extension Card (MO10) or (RA10)		0
✓	02-37	Output Terminal of I/O Extension Card (MO11) or (RA11)		0
✓	02-38	Output Terminal of I/O Extension Card (MO12)		0
✓	02-39	Output Terminal of I/O Extension Card (MO13)		0
✓	02-40	Output Terminal of I/O Extension Card (MO14)		0
✓	02-41	Output Terminal of I/O Extension Card (MO15)		0
✓	02-42	Output Terminal of I/O Extension Card (MO16)		0
✓	02-43	Output Terminal of I/O Extension Card (MO17)		0

	Pr.	Parameter Name	Setting Range	Default
✓	02-44	Output Terminal of I/O Extension Card (MO18)	18: Count value reached, returns to 0 (Pr.02-19) 19: External interrupt B.B. input (Base Block)	0
✓	02-45	Output Terminal of I/O Extension Card (MO19)	20: Warning output 21: Over-voltage	0
✓	02-46	Output Terminal of I/O Extension Card (MO20)	22: Over-current stall prevention 22: Over-current stall prevention	0
			23: Over-voltage stall prevention 24: Operation source 25: Forward command 26: Reverse command 27: Output when current ≥ Pr.02-33 28: Output when current < Pr.02-33 29: Output when frequency ≥ Pr.02-34 30: Output when frequency < Pr.02-34 31: Y-connection for the motor coil 32: △-connection for the motor coil 33: Zero speed (actual output frequency) 34: Zero speed including stop (actual output frequency) 35: Error output selection 1 (Pr.06-23) 36: Error output selection 2 (Pr.06-24) 37: Error output selection 3 (Pr.06-25) 38: Error output selection 4 (Pr.06-26) 39: Position reached (Pr.11-65, Pr.11-66) 40: Speed reached (including Stop) 42: Crane function 43: Motor actual speed detection 44: Low current output (use with Pr.06-71–06-73) 45: UVW output electromagnetic valve switch 46: Master dEb output 47: Closed brake output 49: Homing action completed 50: Output control for CANopen 51: Analog output control for RS-485 interface (InnerCOM / Modbus) 52: Output control for communication cards 65: Output control for both CANopen and RS-485 66: SO output logic A	

	Pr.	Parameter Name	Setting Range	Default
			67: Analog input level reached 68: SO output logic B 70: FAN warning output 75: Forward running status 76: Reverse running status	
✓	02-18	Multi-Function Output Direction	0000h–FFFFh (0: N.O.; 1: N.C.)	0000h
✓	02-19	Terminal Counting Value Reached (Returns to 0)	0–65500	0
✓	02-20	Preliminary Counting Value Reached (Does not Return to 0)	0–65500	0
✓	02-21	Digital Output Gain (DFM)	1–166	1
✓	02-22	Desired Frequency Reached 1	0.00–599.00 Hz	60.00 / 50.00
✓	02-23	The Width of The Desired Frequency Reached 1	0.00–599.00 Hz	2.00
✓	02-24	Desired Frequency Reached 2	0.00–599.00 Hz	60.00 / 50.00
✓	02-25	The Width of The Desired Frequency Reached 2	0.00–599.00 Hz	2.00
	02-32	Brake Delay Time	0.000–65.000 sec.	0.000
✓	02-33	Output Current Level Setting for Multi-Function Output Terminal	0–100%	0
✓	02-34	Output Frequency Setting for Multi-Function Output Terminal	0.00–599.00 Hz (Motor speed when using PG Card)	3.00
✓	02-35	External Operation Control Selection after Reset and Reboot	0: Disable 1: Drive runs if the RUN command remains after reset or reboot	0
✓	02-47	Motor Zero-Speed Level	0–65535 rpm	0
✓	02-48	Maximum Frequency of Resolution Switch	0.01–599.00 Hz	60.00
✓	02-49	Switch Delay Time of Maximum Output Frequency	0.000–65.000 sec.	0.000
	02-50	Display the Status of Multi-Function Input Terminal	Monitor the status of multi-function input terminals	Read only
	02-51	Display the Status of Multi-Function Output Terminal	Monitor the status of multi-function output terminals	Read only
	02-52	Display the External Multi-Function Input Terminals Used by PLC	Monitor the status of PLC input terminals	Read only
	02-53	Display the External Multi-Function Output Terminals Used by PLC	Monitor the status of PLC output terminals	Read only

	Pr.	Parameter Name	Setting Range	Default
	02-54	Display the Frequency Command Executed by External Terminal	0.00–599.00 Hz (Read only)	Read only
	02-56	Brake Release Check Time	0.000–65.000 sec.	0.000
✓	02-57	Multi-Function Output Terminal (Function 42): Brake Current Check Point	0–100%	0
✓	02-58	Multi-Function Output Terminal (Function 42): Brake Frequency Check Point	0.00–599.00 Hz	0.00
✓	02-59	Reverse Release Current Level	0–100%	0
✓	02-60	Reverse Brake Current Level	0–100%	0
✓	02-61	Reverse Release Frequency Level	0.00–599.00 Hz	3.00
✓	02-62	Reverse Brake Frequency Level	0.00–599.00 Hz	0.00
✓	02-63	Frequency Reached Detection Amplitude	0.00–599.00 Hz	0.00
✓	02-64	Light Load Acceleration (LLACC) Mode	0: Disable 1: Enable	0
✓	02-65	Light Load Acceleration (LLACC) Active Frequency	0.00–599.00 Hz	0.00
✓	02-66	Light Load Acceleration (LLACC) Forward Active Current Level	0–100%	0
✓	02-67	Light Load Acceleration (LLACC) Reverse Active Current Level	0–100%	0
	02-68	Light Load Acceleration (LLACC) Delay Time	0.000–60.000 sec.	0.000
✓	02-69	Light Load Acceleration (LLACC) Target Frequency	0.00–60.00 Hz	0.00
	02-70	IO Card Types	1: EMC-BPS01 4: EMC-D611A 5: EMC-D42A 6: EMC-R6AA 11: EMC-A22A	Read only
	02-71	DFM Output Selection	0: Use frequency with speed control as DFM output frequency 1: Use frequency with system acceleration / deceleration as DFM output frequency	0
✓	02-74	Internal / External Multi-Function Input Terminal Selection	0000–FFFFh	0000h
✓	02-75	Internal Multi-Function Input Terminal Contact Status	0000–FFFFh	0000h

	Pr.	Parameter Name	Setting Range	Default
✓	02-76	MO Indication Delay Time during RUN	0.00–655.35 sec.	0.00
✓	02-77	Frequency Reached Error Accumulated Time	0.000–65.535 sec.	0.500

03 Analog Input / Output Parameters

	Pr.	Parameter Name	Setting Range	Default
✓	03-00	AVI Analog Input Selection	0: No function 1: Frequency command (speed limit under torque control mode) 2: Torque command (torque limit under speed control mode) 3: Torque compensation command 4: PID target value 5: PID feedback signal 6: Thermistor (PTC / KTY-84) input value 7: Positive torque limit 8: Negative torque limit 9: Regenerative torque limit 10: Positive / negative torque limit 11: PT100 thermistor input value 12: Auxiliary frequency input 13: PID compensation value	1
✓	03-01	ACI Analog Input Selection		0
✓	03-02	AUI Analog Input Selection		0
✓	03-03	AVI Analog Input Bias	-100.0–100.0%	0
✓	03-04	ACI Analog Input Bias	-100.0–100.0%	0
✓	03-05	AUI Analog Input Bias	-100.0–100.0%	0
✓	03-07	AVI Positive / Negative Bias Mode	0: No bias 1: Lower than or equal to bias 2: Greater than or equal to bias 3: The absolute value of the bias voltage while serving as the center 4: Bias serves as the center	0
✓	03-08	ACI Positive / Negative Bias Mode		
✓	03-09	AUI Positive / Negative Bias Mode		
✓	03-10	Reverse Setting when Analog Signal Input is Negative Frequency	0: Negative frequency input is not allowed. The digital keypad or external terminal controls the forward and reverse direction. 1: Negative frequency is allowed. Positive frequency = run in a forward direction; negative frequency = run in a reverse direction. The digital keypad or external terminal control cannot change the running direction.	0
✓	03-11	AVI Analog Input Gain	-500.0–500.0%	100.0
✓	03-12	ACI Analog Input Gain	-500.0–500.0%	100.0
✓	03-13	AUI Analog Positive Input Gain	-500.0–500.0%	100.0
✓	03-14	AUI Analog Negative Input Gain	-500.0–500.0%	100.0
✓	03-15	AVI Analog Input Filter Time	0.00–20.00 sec.	0.01
✓	03-16	ACI Analog Input Filter Time	0.00–20.00 sec.	0.01

	Pr.	Parameter Name	Setting Range	Default
✓	03-17	AUI Analog Input Filter Time	0.00–20.00 sec.	0.01
✓	03-18	Analog Input Addition Function	0: Disable (AVI, ACI, AUI) 1: Enable	0
✓	03-19	Signal Loss Selection for The Analog Input 4–20 mA	0: Disable 1: Continue operation at the last frequency 2: Decelerate to 0 Hz 3: Stop immediately and display ACE 4: Operates with output frequency lower limit (Pr.01-11) and displays ANL	0
✓	03-20	AFM1 Multi-Function Output 1	0: Output frequency (Hz) 1: Frequency command (Hz) 2: Motor speed (Hz) 3: Output current (rms) 4: Output voltage 5: DC bus voltage 6: Power factor 7: Power 8: Output torque 9: AVI 10: ACI 11: AUI 12: Iq current command 13: Iq feedback value 14: Id current command 15: Id feedback value 18: Torque command 19: PG2 frequency command 20: CANopen analog output 21: RS-485 analog output 22: Communication card analog output 23: Constant voltage output 25: CANopen and RS-485 analog output	0
✓	03-23	AFM2 Multi-Function Output 2		0
✓	03-21	AFM1 Analog Output Gain 1	0.0–500.0%	100.0
✓	03-22	AFM1 Analog Output 1 in REV Direction	0: Absolute value in output voltage 1: Reverse output 0 V; forward output 0–10 V 2: Reverse output 5–0 V; forward output 5–10 V	0
✓	03-24	AFM2 Analog Output Gain 2	0.0–500.0%	100.0
✓	03-25	AFM2 Analog Output 2 in REV Direction	0: Absolute value in output voltage 1: Reverse output 0 V; forward output 0–10 V 2: Reverse output 5–0 V; forward output 5–10 V	0

	Pr.	Parameter Name	Setting Range	Default
✓	03-27	AFM2 Output Bias	-100.00–100.00%	0.00
✓	03-28	AVI Terminal Input Selection	0: 0–10 V 1: 0–20 mA 2: 4–20 mA	0
✓	03-29	ACI Terminal Input Selection	0: 4–20 mA 1: 0–10 V 2: 0–20 mA	0
	03-30	PLC Analog Output Terminal Status	Monitor the status of the PLC analog output terminals	Read only
✓	03-31	AFM2 Output Selection	0: 0–20 mA output 1: 4–20 mA output	0
✓	03-32	AFM1 DC Output Setting Level	0.00–100.00%	0.00
✓	03-33	AFM2 DC Output Setting Level	0.00–100.00%	0.00
✓	03-35	AFM1 Output Filter Time	0.00–20.00 sec.	0.01
✓	03-36	AFM2 Output Filter Time	0.00–20.00 sec.	0.01
✓	03-44	Multi-Function Output (MO) by AI Level Source	0: AVI 1: ACI 2: AUI	0
✓	03-45	AI Upper Level (MO)	-100.00–100.00%	50.00
✓	03-46	AI Lower Level (MO)	-100.00–100.00%	10.00
✓	03-50	Analog Input Curve Selection	0: Normal curve 1: Three-point curve of AVI 2: Three-point curve of ACI 3: Three-point curve of AVI & ACI 4: Three-point curve of AUI 5: Three-point curve of AVI & AUI 6: Three-point curve of ACI & AUI 7: Three-point curve of AVI & ACI & AUI	0
✓	03-51	AVI Lowest Point	Pr.03-28 = 0, 0.00–10.00 V Pr.03-28 = 1, 0.00–20.00 mA Pr.03-28 = 2, 4.00–20.00 mA	0.00 0.00 4.00
✓	03-52	AVI Proportional Lowest Point	-100.00–100.00%	0.00
✓	03-53	AVI Mid-Point	Pr.03-28 = 0, 0.00–10.00 V Pr.03-28 = 1, 0.00–20.00 mA Pr.03-28 = 2, 4.00–20.00 mA	5.00 10.00 12.00
✓	03-54	AVI Proportional Mid-Point	-100.00–100.00%	50.00
✓	03-55	AVI Highest Point	Pr.03-28 = 0, 0.00–10.00 V Pr.03-28 = 1, 0.00–20.00 mA Pr.03-28 = 2, 4.00–20.00 mA	10.00 20.00 20.00
✓	03-56	AVI Proportional Highest Point	-100.00–100.00%	100.00

	Pr.	Parameter Name	Setting Range	Default
✓	03-57	ACI Lowest Point	Pr.03-29 = 0, 4.00–20.00 mA Pr.03-29 = 1, 0.00–10.00V Pr.03-29 = 2, 0.00–20.00 mA	4.00 0.00 0.00
✓	03-58	ACI Proportional Lowest Point	-100.00–100.00%	0.00
✓	03-59	ACI Mid-Point	Pr.03-29 = 0, 4.00–20.00 mA Pr.03-29 = 1, 0.00–10.00 V Pr.03-29 = 2, 0.00–20.00 mA	12.00 5.00 10.00
✓	03-60	ACI Proportional Mid-Point	-100.00–100.00%	50.00
✓	03-61	ACI Highest Point	Pr.03-29 = 0, 4.00–20.00 mA Pr.03-29 = 1, 0.00–10.00 V Pr.03-29 = 2, 0.00–20.00 mA	20.00 10.00 20.00
✓	03-62	ACI Proportional Highest Point	-100.00–100.00%	100.00
✓	03-63	Positive AUI Voltage Lowest Point	0.00–10.00 V	0.00
✓	03-64	Positive AUI Voltage Proportional Lowest Point	-100.00–100.00%	0.00
✓	03-65	Positive AUI Voltage Mid-Point	0.00–10.00 V	5.00
✓	03-66	Positive AUI Voltage Proportional Mid-Point	-100.00–100.00%	50.00
✓	03-67	Positive AUI Voltage Highest Point	0.00–10.00 V	10.00
✓	03-68	Positive AUI Voltage Proportional Highest Point	-100.00–100.00%	100.00
✓	03-69	Negative AUI Voltage Highest Point	-10.00–0.00 V	0.00
✓	03-70	Negative AUI Voltage Proportional Highest Point	-100.00–100.00%	0.00
✓	03-71	Negative AUI Voltage Mid-Point	-10.00–0.00 V	-5.00
✓	03-72	Negative AUI Voltage Proportional Mid-Point	-100.00–100.00%	-50.00
✓	03-73	Negative AUI Voltage Lowest Point	-10.00–0.00 V	-10.00
✓	03-74	Negative AUI Voltage Proportional Lowest Point	-100.00–100.00%	-100.00

04 Multi-step Speed Parameters

	Pr.	Parameter Name	Setting Range	Default
✓	04-00	1st Step Speed Frequency	0.00–599.00 Hz	0.00
✓	04-01	2nd Step Speed Frequency	0.00–599.00 Hz	0.00
✓	04-02	3rd Step Speed Frequency	0.00–599.00 Hz	0.00
✓	04-03	4th Step Speed Frequency	0.00–599.00 Hz	0.00
✓	04-04	5th Step Speed Frequency	0.00–599.00 Hz	0.00
✓	04-05	6th Step Speed Frequency	0.00–599.00 Hz	0.00
✓	04-06	7th Step Speed Frequency	0.00–599.00 Hz	0.00
✓	04-07	8th Step Speed Frequency	0.00–599.00 Hz	0.00
✓	04-08	9th Step Speed Frequency	0.00–599.00 Hz	0.00
✓	04-09	10th Step Speed Frequency	0.00–599.00 Hz	0.00
✓	04-10	11th Step Speed Frequency	0.00–599.00 Hz	0.00
✓	04-11	12th Step Speed Frequency	0.00–599.00 Hz	0.00
✓	04-12	13th Step Speed Frequency	0.00–599.00 Hz	0.00
✓	04-13	14th Step Speed Frequency	0.00–599.00 Hz	0.00
✓	04-14	15th Step Speed Frequency	0.00–599.00 Hz	0.00
✓	04-15	Position Command 1 (Rotation)	-30000–30000	0
✓	04-16	Position Command 1 (Pulse)	-32767–32767	0
✓	04-17	Position Command 2 (Rotation)	-30000–30000	0
✓	04-18	Position Command 2 (Pulse)	-32767–32767	0
✓	04-19	Position Command 3 (Rotation)	-30000–30000	0
✓	04-20	Position Command 3 (Pulse)	-32767–32767	0
✓	04-21	Position Command 4 (Rotation)	-30000–30000	0
✓	04-22	Position Command 4 (Pulse)	-32767–32767	0
✓	04-23	Position Command 5 (Rotation)	-30000–30000	0
✓	04-24	Position Command 5 (Pulse)	-32767–32767	0
✓	04-25	Position Command 6 (Rotation)	-30000–30000	0
✓	04-26	Position Command 6 (Pulse)	-32767–32767	0
✓	04-27	Position Command 7 (Rotation)	-30000–30000	0
✓	04-28	Position Command 7 (Pulse)	-32767–32767	0
✓	04-29	Position Command 8 (Rotation)	-30000–30000	0
✓	04-30	Position Command 8 (Pulse)	-32767–32767	0
✓	04-31	Position Command 9 (Rotation)	-30000–30000	0
✓	04-32	Position Command 9 (Pulse)	-32767–32767	0
✓	04-33	Position Command 10 (Rotation)	-30000–30000	0
✓	04-34	Position Command 10 (Pulse)	-32767–32767	0
✓	04-35	Position Command 11 (Rotation)	-30000–30000	0
✓	04-36	Position Command 11 (Pulse)	-32767–32767	0
✓	04-37	Position Command 12 (Rotation)	-30000–30000	0

	Pr.	Parameter Name	Setting Range	Default
✓	04-38	Position Command 12 (Pulse)	-32767–32767	0
✓	04-39	Position Command 13 (Rotation)	-30000–30000	0
✓	04-40	Position Command 13 (Pulse)	-32767–32767	0
✓	04-41	Position Command 14 (Rotation)	-30000–30000	0
✓	04-42	Position Command 14 (Pulse)	-32767–32767	0
✓	04-43	Position Command 15 (Rotation)	-30000–30000	0
✓	04-44	Position Command 15 (Pulse)	-32767–32767	0
✓	04-50	PLC Buffer 0	0–65535	0
✓	04-51	PLC Buffer 1	0–65535	0
✓	04-52	PLC Buffer 2	0–65535	0
✓	04-53	PLC Buffer 3	0–65535	0
✓	04-54	PLC Buffer 4	0–65535	0
✓	04-55	PLC Buffer 5	0–65535	0
✓	04-56	PLC Buffer 6	0–65535	0
✓	04-57	PLC Buffer 7	0–65535	0
✓	04-58	PLC Buffer 8	0–65535	0
✓	04-59	PLC Buffer 9	0–65535	0
✓	04-60	PLC Buffer 10	0–65535	0
✓	04-61	PLC Buffer 11	0–65535	0
✓	04-62	PLC Buffer 12	0–65535	0
✓	04-63	PLC Buffer 13	0–65535	0
✓	04-64	PLC Buffer 14	0–65535	0
✓	04-65	PLC Buffer 15	0–65535	0
✓	04-66	PLC Buffer 16	0–65535	0
✓	04-67	PLC Buffer 17	0–65535	0
✓	04-68	PLC Buffer 18	0–65535	0
✓	04-69	PLC Buffer 19	0–65535	0
✓	04-70	PLC Application Parameter 0	0–65535	0
✓	04-71	PLC Application Parameter 1	0–65535	0
✓	04-72	PLC Application Parameter 2	0–65535	0
✓	04-73	PLC Application Parameter 3	0–65535	0
✓	04-74	PLC Application Parameter 4	0–65535	0
✓	04-75	PLC Application Parameter 5	0–65535	0
✓	04-76	PLC Application Parameter 6	0–65535	0
✓	04-77	PLC Application Parameter 7	0–65535	0
✓	04-78	PLC Application Parameter 8	0–65535	0
✓	04-79	PLC Application Parameter 9	0–65535	0
✓	04-80	PLC Application Parameter 10	0–65535	0
✓	04-81	PLC Application Parameter 11	0–65535	0

	Pr.	Parameter Name	Setting Range	Default
✓	04-82	PLC Application Parameter 12	0–65535	0
✓	04-83	PLC Application Parameter 13	0–65535	0
✓	04-84	PLC Application Parameter 14	0–65535	0
✓	04-85	PLC Application Parameter 15	0–65535	0
✓	04-86	PLC Application Parameter 16	0–65535	0
✓	04-87	PLC Application Parameter 17	0–65535	0
✓	04-88	PLC Application Parameter 18	0–65535	0
✓	04-89	PLC Application Parameter 19	0–65535	0
✓	04-90	PLC Application Parameter 20	0–65535	0
✓	04-91	PLC Application Parameter 21	0–65535	0
✓	04-92	PLC Application Parameter 22	0–65535	0
✓	04-93	PLC Application Parameter 23	0–65535	0
✓	04-94	PLC Application Parameter 24	0–65535	0
✓	04-95	PLC Application Parameter 25	0–65535	0
✓	04-96	PLC Application Parameter 26	0–65535	0
✓	04-97	PLC Application Parameter 27	0–65535	0
✓	04-98	PLC Application Parameter 28	0–65535	0
✓	04-99	PLC Application Parameter 29	0–65535	0

05 Motor Parameters

	Pr.	Parameter Name	Setting Range	Default
	05-00	Motor Parameter Auto-Tuning	0: No function 1: Simple rolling auto-tuning for induction motor (IM) 2: Static auto-tuning for induction motor(IM) 4: Dynamic test for PM magnetic pole (with running in forward direction) 5: Rolling auto-tuning for PM (IPM / SPM) 6: Advanced rolling auto-tuning for IM motor flux curve 11: SynRM parameter auto-tuning 12: FOC sensorless inertia estimation 13: Static auto-tuning for PM	0
	05-01	Full-Load Current for Induction Motor 1 (A)	Depending on the model power	Depending on the model power
✓	05-02	Rated Power for Induction Motor 1 (Kw)	0.00–655.35 kW	Depending on the model power
✓	05-03	Rated Speed for Induction Motor 1 (Rpm)	0–xxxx rpm (Depending on the motor's number of poles)	Depending on the motor's number of poles
	05-04	Number of Poles for Induction Motor 1	2–64	4
	05-05	No-Load Current for Induction Motor 1 (A)	0.00– Pr.05-01 default	Depending on the model power
	05-06	Stator Resistance (Rs) for Induction Motor 1	0.000–65.535 Ω	Depending on the model power
	05-07	Rotor Resistance (Rr) for Induction Motor 1	0.000–65.535 Ω	Depending on the model power
	05-08	Magnetizing Inductance (Lm) for Induction Motor 1	0.0–6553.5 mH	Depending on the model power
	05-09	Stator Inductance (Lx) for Induction Motor 1	0.0–6553.5 mH	Depending on the model power
	05-13	Full-Load Current for Induction Motor 2 (A)	Depending on the model power	Depending on the model power
✓	05-14	Rated Power for Induction Motor 2 (kW)	0.00–655.35 kW	Depending on the model power
✓	05-15	Rated Speed for Induction Motor 2 (rpm)	0–xxxx rpm (Depending on the motor's number of poles)	Depending on the motor's number of poles

	Pr.	Parameter Name	Setting Range	Default
	05-16	Number of Poles for Induction Motor 2	2–64	4
	05-17	No-Load Current for Induction Motor 2 (A)	0.00– Pr.05-13 default	Depending on the model power
	05-18	Stator Resistance (Rs) for Induction Motor 2	0.000–65.535 Ω	Depending on the model power
	05-19	Rotor Resistance (Rr) for Induction Motor 2	0.000–65.535 Ω	Depending on the model power
	05-20	Magnetizing Inductance (Lm) for Induction Motor 2	0.0–6553.5 mH	Depending on the model power
	05-21	Stator Inductance (Lx) for Induction Motor 2	0.0–6553.5 mH	Depending on the model power
	05-22	Induction Motor 1 / 2 Selection	1: Motor 1 2: Motor 2	1
✓	05-23	Frequency For Y-Connection / D-Connection Switch for Induction Motor	0.00–599.00 Hz	60.00
	05-24	Y-Connection / D-Connection Switch for an Induction Motor	0: Disable 1: Enable	0
✓	05-25	Delay Time for Y-Connection / D-Connection Switch for an Induction Motor	0.000–60.000 sec.	0.200
	05-28	Accumulative Watt-Hour for A Motor (W-Hour)	0.0–999.9	Read only
	05-29	Accumulative Watt-Hour for A Motor in Low Word (kW-Hour)	0.0–999.9	Read only
	05-30	Accumulative Watt-Hour ffor A Motor in High Word (kW-Hour)	0–65535	Read only
	05-31	Accumulated Motor Operation Time (Minutes)	0–1439	0
	05-32	Accumulative Motor Operation Time (Days)	0–65535	0
	05-33	Induction Motor (IM) and Permanent Magnet Synchronous AC Motor (PM) Selection	0: IM 1: SPM 2: IPM 3: SynRM	0
	05-34	Full-Load Current for a Permanent Magnet Synchronous AC Motor / Reluctance Motor	Depending on the model power	Depending on the model power

	Pr.	Parameter Name	Setting Range	Default
✓	05-35	Rated Power for a Permanent Magnet Synchronous AC Motor / Reluctance Motor	0.00–655.35 kW	Depending on the model power
✓	05-36	Rated Speed for a Permanent Magnet Synchronous AC Motor / Reluctance Motor	0–65535 rpm	2000
	05-37	Number of Poles for a Permanent Magnet Synchronous AC Motor / Reluctance Motor	0–65535	10
	05-38	System Inertia for a Permanent Magnet Synchronous AC Motor / Reluctance Motor	0.0–6553.5 kg-cm^2	Depending on the model power
	05-39	Stator Resistance for a Permanent Magnet Synchronous AC Motor / Reluctance Motor	0.000–65.535 Ω	0.000
	05-40	Permanent Magnet Synchronous AC Motor / Reluctance Motor Ld	0.00–655.35 mH / 0.0–6553.5 mH	0.00 / 0.0
	05-41	Permanent Magnet Synchronous AC Motor / Reluctance Motor Lq	0.00–655.35 mH / 0.0–6553.5 mH	0.00 / 0.0
✓	05-42	PG Offset Angle for a Permanent Magnet Synchronous AC Motor / Reluctance Motor	0.0–360.0°	0.0
✓	05-43	Ke Parameter for a Permanent Magnet Synchronous AC Motor / Reluctance Motor	0–65535 V/krpm	0
	05-51	Motor Code	0–65535	0

06 Protection Parameters

	Pr.	Parameter Name	Setting Range	Default
✓	06-00	Low Voltage Level	230V models: Frame A–D: 150.0–220.0 V_{DC} Frame E and above: 190.0–220.0 V_{DC} 460V models: Frame A–D: 300.0–440.0 V_{DC} Frame E and above: 380.0–440.0 V_{DC}	 180.0 200.0 360.0 400.0
✓	06-01	Over-Voltage Stall Prevention	0: Disabled 230V models: 0.0–450.0 V_{DC} 460V models: 0.0–900.0 V_{DC}	 380.0 760.0
✓	06-02	Selection for Over-Voltage Stall Prevention	0: Traditional over-voltage stall prevention 1: Smart over-voltage stall prevention	0
✓	06-03	Over-Current Stall Prevention during Acceleration	Supper heavy duty: 0–220% (100% corresponds to the drive's rated current)	200
✓	06-04	Over-Current Stall Prevention during Operation	Super heavy duty: 0–220% (100% corresponds to the drive's rated current)	200
✓	06-05	Acceleration / Deceleration Time Selection for Stall Prevention at Constant Speed	0: By current acceleration / deceleration time 1: By the first acceleration / deceleration time 2: By the second acceleration / deceleration time 3: By the third acceleration / deceleration time 4: By the fourth acceleration / deceleration time 5: By auto-acceleration / auto-deceleration	0
✓	06-06	Over-Torque Detection Selection (OT1)	0: No function 1: Continue operation after over-torque detection during constant speed operation 2: Stop after over-torque detection during constant speed operation 3: Continue operation after over-torque detection during RUN 4: Stop after over-torque detection during RUN	0
✓	06-07	Over-Torque Detection Level (OT1)	10–250% (100% corresponds to the drive's rated current)	120
✓	06-08	Over-Torque Detection Time (OT1)	0.0–60.0 sec.	0.1
✓	06-09	Over-Torque Detection Selection (OT2)	0: No function 1: Continue operation after over-torque detection during constant speed operation 2: Stop after over-torque detection during constant speed operation 3: Continue operation after over-torque detection	0

	Pr.	Parameter Name	Setting Range	Default
			during RUN 4: Stop after over-torque detection during RUN	
✓	06-10	Over-Torque Detection Level (OT2)	10–250% (100% corresponds to the drive's rated current)	120
✓	06-11	Over-Torque Detection Time (OT2)	0.0–60.0 sec.	0.1
✓	06-12	Current Limit	0–220% (100% corresponds to the drive's rated current)	200
✓	06-13	Electronic Thermal Relay Selection 1 (Motor 1)	0: Inverter motor (with external forced cooling) 1: Standard motor (motor with fan on the shaft) 2: Disable	2
✓	06-14	Electronic Thermal Relay Action Time 1 (Motor 1)	30.0–600.0 sec.	60.0
✓	06-15	Temperature Level Overheat (oH) Warning	0.0–110.0°C	105.0
✓	06-16	Stall Prevention Limit Level (Weak Magnetic Field Current Stall Prevention Level)	0–100% (refer to Pr.06-03)	100
	06-17	Fault Record 1	0: No fault record 1: Over-current during acceleration (ocA) 2: Over-current during deceleration (ocd) 3: Over-current during steady operation (ocn) 4: Ground fault (GFF) 5: IGBT short-circuit between upper bridge and lower bridge (occ) 6: Over-current at stop (ocS) 7: Over-voltage during acceleration (ovA) 8: Over-voltage during deceleration (ovd) 9: Over-voltage at constant speed (ovn) 10: Over-voltage at stop (ovS) 11: Low-voltage during acceleration (LvA) 12: Low-voltage during deceleration (Lvd) 13: Low-voltage at constant speed (Lvn) 14: Low voltage at stop (LvS) 15: Phase loss protection (OrP) 16: IGBT overheating (oH1) 17: Heatsink overheating (oH2) 18: IGBT temperature detection failure (tH1o) 19: Capacitor hardware error (tH2o) 21: Over load (oL)	0
	06-18	Fault Record 2		0
	06-19	Fault Record 3		0
	06-20	Fault Record 4		0
	06-21	Fault Record 5		0
	06-22	Fault Record 6		0

Pr.	Parameter Name	Setting Range	Default
		22: Electronic thermal relay 1 protection (EoL1) 23: Electronic thermal relay 2 protection (EoL2) 24: Motor overheating (oH3) (PTC / PT100) 25: Interrupt error (INTR) 26: Over torque 1 (ot1) 27: Over torque 2 (ot2) 28: Under current (uC) 29: Limit error (LiT) 30: EEPROM write error (cF1) 31: EEPROM read error (cF2) 33: U-phase error (cd1) 34: V-phase error (cd2) 35: W-phase error (cd3) 36: cc (current clamp) hardware error (Hd0) 37: oc (over-current) hardware error (Hd1) 38: ov (over-voltage) hardware error (Hd2) 39: occ hardware error (Hd3) 40: Auto-tuning error (AUE) 41: PID loss ACI (AFE) 42: PG feedback error (PGF1) 43: PG feedback loss (PGF2) 44: PG feedback stall (PGF3) 45: PG slip error (PGF4) 48: ACI loss (ACE) 49: External fault (EF) 50: Emergency stop (EF1) 51: External base block (bb) 52: Enter wrong password three times and locked (PcodE) 54: Illegal command (CE1) 55: Illegal data address (CE2) 56: Illegal data value (CE3) 57: Data is written to read-only address (CE4) 58: Modbus transmission time-out (CE10) 60: Brake transistor error (bF) 61: Y-connection / △-connection switch error (ydc) 62: Deceleration energy backup error (dEb) 63: Over slip error (oSL) 64: Electric valve switch error (ryF) 65: Hardware error of PG card (PGF5)	

Pr.	Parameter Name	Setting Range	Default
		68: Reverse direction of the speed feedback (SdRv) 69: Over speed rotation feedback (SdOr) 70: Large deviation of speed feedback (SdDe) 71: Watchdog (WDTT) 72: STO loss 1 (STL1) 73: Emergency stop for external safety (S1) 75: External brake error (Brk) 76: Safe torque off (STO) 77: STO loss 2 (STL2) 78: STO loss 3 (STL3) 82: Output phase loss U phase (OPHL) 83: Output phase loss V phase(OPHL) 84: Output phase loss W phase (OPHL) 85: PG ABZ line off (AboF) (PG-02U) 86: PG UVW line off (UvoF) (PG-02U) 87: Overload protection at low frequency (oL3) 89: Rotor position detection error (RoPd) 90: Forced to stop (FStp) 92: Pulse tuning Ld / Lq error (LEr) 93: CPU error 0 (TRAP) 101: CANopen guarding error (CGdE) 102: CANopen heartbeat error (CHbE) 104: CANopen bus off error (CbFE) 105: CANopen index error (CidE) 106: CANopen station address error (CAdE) 107: CANopen memory error (CFrE) 111: InrCOM time-out error (ictE) 112: PM sensorless shaft lock error (SfLK) 142: Auto-tune error 1 (no feedback current error) (AUE1) 143: Auto-tune error 2 (motor phase loss error) (AUE2) 144: Auto-tune error 3 (no-load current I_0 measuring error) (AUE3) 148: Auto-tune error 4 (leakage inductance Lsigma measuring error) (AUE4) 171: Over position error (oPEE) 174: Encoder error (EcEr) 175: Encoder communication error (EcCe) 176: Encoder multi-turn overflows (EcOF) 177: Encoder power off (EcNP)	

	Pr.	Parameter Name	Setting Range	Default
			178: Encoder multi-turn error (EcMc) 179: PG multi-turn read error (PgMr) 180: Encoder single-turn error (EcSc) 181: PG command error (PgCe) 182: Interpolation time error (IPTE) 183: Interpolation command failure (IPCM) 184: No motion control (NoMo) 185: Motor code error (MoTo) 186: D2D Time-out (DDTO) 187: Flux linkage observer failure (FobF) 188: Load estimation error (TLAT) 189: Inertia estimation error (JsAT) 190: Bandwidth estimation error (BWAT) 191: Positioning failure during estimation (ATPF) 192: Homing deviation is too large (HmOE) 193: Cleaning multi-turn data failure (CMTE) 195: ASR AT process is too short (ATTv)	
✓	06-23	Fault Output Option 1	0–65535 (refer to bit table for fault code)	0
✓	06-24	Fault Output Option 2	0–65535 (refer to bit table for fault code)	0
✓	06-25	Fault Output Option 3	0–65535 (refer to bit table for fault code)	0
✓	06-26	Fault Output Option 4	0–65535 (refer to bit table for fault code)	0
✓	06-27	Electronic Thermal Relay Selection 2 (Motor 2)	0: Inverter motor (with external forced cooling) 1: Standard motor (motor with fan on the shaft) 2: Disable	2
✓	06-28	Electronic Thermal Relay Action Time 2 (Motor 2)	30.0–600.0 sec.	60.0
✓	06-29	PTC Detection Selection / PT100 Motion	0: Warn and continue operation 1: Fault and ramp to stop 2: Fault and coast to stop 3: No warning	0
✓	06-30	PTC Level / KTY84 Level	0.0–100.0%	50.0
	06-31	Frequency Command for Malfunction	0.00–599.00 Hz	Read only
	06-32	Output Frequency at Malfunction	0.00–599.00 Hz	Read only
	06-33	Output Voltage at Malfunction	0.0–6553.5 V	Read only
	06-34	DC Bus Voltage at Malfunction	0.0–6553.5 V	Read only

	Pr.	Parameter Name	Setting Range	Default
	06-35	Output Current at Malfunction	0.0–6553.5 Amp	Read only
	06-36	IGBT Temperature at Malfunction	-3276.7–3276.7°C	Read only
	06-37	Capacitance Temperature at Malfunction	-3276.7–3276.7°C	Read only
	06-38	Motor Speed at Malfunction	-32767–32767 rpm	Read only
	06-39	Torque Command at Malfunction	-32767–32767%	Read only
	06-40	Status of The Multi-Function Input Terminal at Malfunction	0000h–FFFFh	Read only
	06-41	Status of The Multi-Function Output Terminal at Malfunction	0000h–FFFFh	Read only
	06-42	Drive Status at Malfunction	0000h–FFFFh	Read only
✓	06-44	STO Latch Selection	0: STO latch 1: STO no latch	0
✓	06-45	Output Phase Loss Detection Action (OPHL)	0: Warn and continue operation 1: Fault and ramp to stop 2: Fault and coast to stop 3: No warning	3
✓	06-46	Deceleration Time for Output Phase Loss	0.000–65.535 sec.	3.000
✓	06-47	Current Detection Level for Output Phase Loss	0.00–100.00%	1.00
✓	06-48	DC Brake Time for Output Phase Loss	0.000–65.535 sec.	0.000
✓	06-49	LvX Auto-Reset	0: Disable 1: Enable	0
✓	06-50	Time for Input Phase Loss Detection	0.00–600.00 sec.	0.20
✓	06-51	Capacitance oH Warning Level	0.0–110.0 degree	Depending on the model power
✓	06-52	Ripple of Input Phase Loss	230V models: 0.0–160.0 V_{DC} 460V models: 0.0–320.0 V_{DC}	30.0 60.0
✓	06-53	Input Phase Loss Detection Action (Orp)	0: Fault and ramp to stop 1: Fault and coast to stop	0
✓	06-56	PT100 Voltage Level 1	0.000–10.000 V	5.000
✓	06-57	PT100 Voltage Level 2	0.000–10.000 V	7.000

	Pr.	Parameter Name	Setting Range	Default
✓	06-58	PT100 Level 1 Frequency Protection	0.00–599.00 Hz	0.00
✓	06-59	PT100 Activation Level 1 Protection Frequency Delay Time	0–6000 sec.	60
✓	06-60	Software Detection GFF Current Level	0.0–6553.5%	60.0
✓	06-61	Software Detection GFF Filter Time	0.00–655.35 sec.	0.10
✓	06-62	Deb Reset Bias Level	230V models: 0.0–100.0 V_{DC} 460V models: 0.0–200.0 V_{DC}	20.0 40.0
	06-63	Operation Time of Fault Record 1 (Days)	0–65535 days	Read only
	06-64	Operation Time of Fault Record 1 (Minutes)	0–1439 min.	Read only
	06-65	Operation Time of Fault Record 2 (Days)	0–65535 days	Read only
	06-66	Operation Time of Fault Record 2 (Minutes)	0–1439 min.	Read only
	06-67	Operation Time of Fault Record 3 (Days)	0–65535 days	Read only
	06-68	Operation Time of Fault Record 3 (Minutes)	0–1439 min.	Read only
	06-69	Operation Time of Fault Record 4 (Days)	0–65535 days	Read only
	06-70	Operation Time of Fault Record 4 (Minutes)	0–1439 min.	Read only
✓	06-71	Low Current Setting Level	0.0–100.0%	0.0
✓	06-72	Low Current Detection Time	0.00–360.00 sec.	0.00
✓	06-73	Low Current Action	0 : No function 1 : Fault and coast to stop 2 : Fault and ramp to stop by the second deceleration time 3 : Warn and continue operation	0
✓	06-86	PTC Type	0–1 0: PTC 1: KTY84-130 2: PT1000	0
✓	06-88	Software OC Protection Level (A)	0.0–6553.5 A	0.0

07 Special Parameters

	Pr.	Parameter Name	Setting Range	Default
✓	07-00	Software Brake Chopper Action Level	230V models: 350.0–450.0 V_{DC} 460V models: 700.0–900.0 V_{DC}	370.0 740.0
✓	07-01	DC Brake Current Level	0–100%	0
✓	07-02	DC Brake Time at Start-Up	0.0–60.0 sec.	0.0
✓	07-03	DC Brake Time at STOP	0.0–60.0 sec.	0.0
✓	07-04	Startup Frequency at STOP	0.00–599.00 Hz	0.00
✓	07-05	Voltage Increasing Gain	1–200%	100
✓	07-06	Restart after Momentary Power Loss	0: Stop operation 1: Speed tracking by the speed before the power loss 2: Speed tracking by the minimum output frequency	0
✓	07-07	Allowed Power Loss Duration	0.0–20.0 sec.	2.0
✓	07-08	Base Block Time	0.0–5.0 sec.	Depending on the model power
✓	07-09	Current Limit of Speed Tracking	20–200%	100
✓	07-10	Restart after Fault Action	0: Stop operation 1: Speed tracking by current speed 2: Speed tracking by minimum output frequency	0
✓	07-11	Number of Times of Restart after Fault	0–10	0
✓	07-12	Speed Tracking during Start-Up	0: Disable 1: Speed tracking by the maximum output frequency 2: Speed tracking by the motor frequency at start-up 3: Speed tracking by the minimum output frequency 4: Speed tracking by the motor vector flux	0
✓	07-13	dEb Function Selection	0: Disable 1: dEb with auto-acceleration / auto-deceleration, the drive does not output the frequency after the power is restored. 2: dEb with auto-acceleration / auto-deceleration, the drive outputs the frequency after the power is restored 3: dEb low-voltage control, then the drive's voltage increases to 350 V_{DC} / 700 V_{DC} and ramps to stop after low frequency 4: dEb high-voltage control of 350 V_{DC} / 700 V_{DC}, and the drive ramps to stop	0
✓	07-14	Deb Function Reset Time	0.0–25.0 sec.	3.0
✓	07-15	Dwell Time at Acceleration	0.00–600.00 sec.	0.00
✓	07-16	Dwell Frequency at Acceleration	0.00–599.00 Hz	0.00
✓	07-17	Dwell Time at Deceleration	0.00–600.00 sec.	0.00

	Pr.	Parameter Name	Setting Range	Default
✓	07-18	Dwell Frequency at Deceleration	0.00–599.00 Hz	0.00
✓	07-19	Fan Cooling Control	0: Fan always ON 1: Fan is OFF after the AC motor drive stops for one minute 2: Fan is ON when the AC motor drive runs; fan is OFF when the AC motor drive stops 3: Fan turns ON when temperature (IGBT) reaches around 60°C 4: Fan always OFF	0
✓	07-20	Emergency Stop (EF) & Force to Stop Selection	0: Coast to stop 1: Stop by the first deceleration time 2: Stop by the second deceleration time 3: Stop by the third deceleration time 4: Stop by the fourth deceleration time 5: System deceleration 6: Automatic deceleration	0
✓	07-21	Automatic Energy-Saving Selection	0: Disable 1: Power factor energy-saving improvement (for VF, SVC and VFPG control modes) 2: Automatic energy-saving (AES) optimization (for VF, SVC and VFPG control modes)	0
✓	07-23	Auto Voltage Regulation (AVR) Function	0: Enable AVR 1: Disable AVR 2: Disable AVR during deceleration	0
✓	07-24	Torque Command Filter Time	0.001–10.000 sec.	0.500
✓	07-25	Slip Compensation Filter Time	0.001–10.000 sec.	0.100
✓	07-26	Torque Compensation Gain	IM: 0–10 (when Pr.05-33 = 0) PM: 0–5000 (when Pr.05-33 = 1 or 2)	0
✓	07-27	Slip Compensation Gain	0.00–10.00	0.00 (Default value is 1.00 in SVC mode)
✓	07-29	Slip Deviation Level	0.0–100.0% 0: Not detection	0.0
✓	07-30	Over-Slip Deviation Detection Time	0.0–10.0 sec.	1.0
✓	07-31	Over-Slip Deviation Treatment	0: Warn and continue operation 1: Fault and ramp to stop 2: Fault and coast to stop 3: No warning	0

	Pr.	Parameter Name	Setting Range	Default
✓	07-32	Motor Oscillation Compensation Factor	0–10000 0: Disable	1000
✓	07-33	Auto-Reset Interval of Fault	0.0–6000.0 sec.	60.0
✓	07-38	PMSVC Voltage Feed Forward Gain	0.00–2.00	1.00
✓	07-41	Minimum Frequency for AES	0.00–40.00 Hz	10.00
	07-42	Delay Time for AES	0–600 sec.	5
✓	07-43	Targeted Power Factor Angle for AES	0.00–65.00 degrees	40.00
✓	07-44	Maximum Voltage Drop for AES	0.00–70.00%	60.00
✓	07-45	AES Coefficient	0–10000%	100
✓	07-62	Deb Gain (Kp)	0–65535	8000
✓	07-63	Deb Gain (Ki)	0–65535	150

08 High-function PID Parameters

	Pr.	Parameter Name	Setting Range	Default
✓	08-00	Terminal Selection of PID Feedback	0: No function 1: Negative PID feedback: by analogue input (Pr.03-00–03-02) 2: Negative PID feedback: by PG card pulse input, without direction (Pr.10-02) 3: Negative PID feedback: by PG card pulse input, with direction (Pr.10-02) 4: Positive PID feedback: by analog input (Pr.03-00–03-02) 5: Positive PID feedback: by PG card pulse input, without direction (Pr.10-02) 6: Positive PID feedback: by PG card pulse input, with direction (Pr.10-02) 7: Negative PID feedback: by communication protocols 8: Positive PID feedback: by communication protocols	0
✓	08-01	Proportional Gain (P)	0.0–500.0	1.0
✓	08-02	Integral Time (I)	0.00–100.00 sec. 0.0: No integral	1.00
✓	08-03	Differential Time (D)	0.00–1.00 sec.	0.00
✓	08-04	Upper Limit of Integral Control	0.0–100.0%	100.0
✓	08-05	PID Output Command Limit	0.0–110.0%	100.0
✓	08-06	PID Feedback Value by Communication Protocol	-200.00–200.00%	Read only
✓	08-07	PID Delay Time	0.0–35.0 sec.	0.0
✓	08-08	Feedback Signal Detection Time	0.0–3600.0 sec.	0.0
✓	08-09	Feedback Signal Fault Treatment	0: Warn and continue operation 1: Fault and ramp to stop 2: Fault and coast to stop 3: Warn and operate at last frequency	0
✓	08-10	Sleep Level	0.00–599.00 Hz / 0.00–200.00%	0.00
✓	08-11	Wake-Up Level	0.00–599.00 Hz / 0.00–200.00%	0.00
✓	08-12	Sleep Delay Time	0.0–6000.0 sec.	0.0
✓	08-13	PID Feedback Signal Error Deviation Level	1.0–50.0%	10.0
✓	08-14	PID Feedback Signal Error Deviation Detection Time	0.1–300.0 sec.	5.0
✓	08-16	PID Compensation Selection	0: Parameter setting (Pr.08-17) 1: Analog input	0

	Pr.	Parameter Name	Setting Range	Default
✓	08-17	PID Compensation	-100.0–100.0%	0.0
	08-18	Sleep Mode Function Setting	0: Refer to PID output command 1: Refer to PID feedback signal	0
✓	08-19	Wake-Up Integral Limit	0.0–200.0%	50.0
	08-20	PID Mode Selection	0: Serial connection 1: Parallel connection	0
	08-21	Enable PID to Change The Operation Direction	0: Operation direction cannot be changed 1: Operation direction can be changed	0
✓	08-22	Wake-Up Delay Time	0.00–600.00 sec.	0.00
✓	08-23	PID Control Flag	bit 0 = 1, PID running in reverse follows the setting for Pr.00-23. bit 0 = 0, PID running in reverse refer to PID's calculated value. bit1 = 1, two decimal places for PID Kp bit1 = 0, one decimal place for PID Kp	0000h
✓	08-26	PID Output Command Limit (Reverse Limit)	0.0–100.0%	100.0
✓	08-66	PID Target Value Setting	-100.00–100.00%	50.00

09 Communication Parameters

	Pr.	Parameter Name	Setting Range	Default
✓	09-00	COM1 Communication Address	1–254	1
✓	09-01	COM1 Transmission Speed	4.8–115.2 Kbps	9.6
✓	09-02	COM1 Transmission Fault Treatment	0: Warn and continue operation 1: Fault and ramp to stop 2: Fault and coast to stop 3: No warning, no fault and continue operation	3
✓	09-03	COM1 Time-Out Detection	0.0–100.0 sec.	0.0
✓	09-04	COM1 Communication Protocol	1: 7, N, 2 (ASCII) 2: 7, E, 1 (ASCII) 3: 7, O, 1 (ASCII) 4: 7, E, 2 (ASCII) 5: 7, O, 2 (ASCII) 6: 8, N, 1 (ASCII) 7: 8, N, 2 (ASCII) 8: 8, E, 1 (ASCII) 9: 8, O, 1 (ASCII) 10: 8, E, 2 (ASCII) 11: 8, O, 2 (ASCII) 12: 8, N, 1 (RTU) 13: 8, N, 2 (RTU) 14: 8, E, 1 (RTU) 15: 8, O, 1 (RTU) 16: 8, E, 2 (RTU) 17: 8, O, 2 (RTU)	1
✓	09-09	Communication Response Delay Time	0.0–200.0 ms	2.0
	09-10	Communication Main Frequency	0.00–599.00 Hz	60.00
✓	09-11	Block Transfer 1	0000–FFFFh	0000h
✓	09-12	Block Transfer 2	0000–FFFFh	0000h
✓	09-13	Block Transfer 3	0000–FFFFh	0000h
✓	09-14	Block Transfer 4	0000–FFFFh	0000h
✓	09-15	Block Transfer 5	0000–FFFFh	0000h
✓	09-16	Block Transfer 6	0000–FFFFh	0000h
✓	09-17	Block Transfer 7	0000–FFFFh	0000h
✓	09-18	Block Transfer 8	0000–FFFFh	0000h
✓	09-19	Block Transfer 9	0000–FFFFh	0000h
✓	09-20	Block Transfer 10	0000–FFFFh	0000h
✓	09-21	Block Transfer 11	0000–FFFFh	0000h

	Pr.	Parameter Name	Setting Range	Default
✓	09-22	Block Transfer 12	0000–FFFFh	0000h
✓	09-23	Block Transfer 13	0000–FFFFh	0000h
✓	09-24	Block Transfer 14	0000–FFFFh	0000h
✓	09-25	Block Transfer 15	0000–FFFFh	0000h
✓	09-26	Block Transfer 16	0000–FFFFh	0000h
	09-29	D2D Communication Format	0: High-speed mode 1: COM1 communication format	0
	09-30	Communication Decoding Method	0: Decoding method 1 (20xx) 1: Decoding method 2 (60xx)	1
	09-31	Internal Communication Protocol	0: Modbus 485 -1: Internal communication slave 1 -2: Internal communication slave 2 -3: Internal communication slave 3 -4: Internal communication slave 4 -5: Internal communication slave 5 -6: Internal communication slave 6 -7: Internal communication slave 7 -8: Internal communication slave 8 -10: Internal communication master -12: Internal PLC control -20: D2D Master -21: D2D Slave 1 -22: D2D Slave 2 -23: D2D Slave 3 -24: D2D Slave 4 -25: D2D Slave 5 -26: D2D Slave 6 -27: D2D Slave 7 -28: D2D Slave 8	0
	09-32	Number of D2D Communication Slave	0–8	0
✓	09-33	PLC Command Force to 0	bit0: Before PLC scans, set up PLC target frequency=0 bit1: Before PLC scans, set up PLC target torque=0 bit2: Before PLC scans, set up the speed limit of torque control mode=0	0
	09-35	PLC Address	1–254	2
	09-36	Canopen Slave Address	0: Disable 1–127	0

Pr.	Parameter Name	Setting Range	Default
09-37	Canopen Speed	0: 1 Mbps 1: 500 Kbps 2: 250 Kbps 3: 125 Kbps 4: 100 Kbps (Delta only) 5: 50 Kbps	0
09-39	Canopen Warning Record	bit 0: CANopen guarding time out bit 1: CANopen heartbeat time out bit 2: CANopen SYNC time out bit 3: CANopen SDO time out bit 4: CANopen SDO buffer overflow bit 5: Can bus off bit 6: Error protocol of CANopen	Read only
09-40	Canopen Decoding Method	0: Disable (Delta-defined decoding method) 1: Enable (CANopen standard DS402 protocol)	1
09-41	Canopen Communication Status	0: Node reset state 1: Com reset state 2: Boot up state 3: Pre-operation state 4: Operation state 5: Stop state	Read only
09-42	Canopen Control Status	0: Not ready for use state 1: Inhibit start state 2: Ready to switch on state 3: Switched on state 4: Enable operation state 7: Quick stop active state 13: Error reaction activation state 14: Error state	Read only
09-45	Canopen Master Function	0: Disable 1: Enable	0
09-46	Canopen Master Address	1–127	100
09-49	Canopen Extension Setting	bit0: Index 604F and 6050 update to the 1st acceleration / deceleration time or not. bit0 = 0: update bit0 = 1: do not update bit1: The verification of CANopen identification code is distinguished by power model or drive series. bit1 = 0: distinguished by power model	0002h

	Pr.	Parameter Name	Setting Range	Default
			bit1=1: distinguished by drive series	
	09-60	Communication Card Identification	0: No communication card 1: DeviceNet Slave 2: Profibus-DP Slave 3: CANopen Slave / Master 5: Ethernet/IP Slave 6: EtherCAT 12: PROFINET	Read only
	09-61	Firmware Version of Communication Card	Read only	Read only
	09-62	Product Code	Read only	Read only
	09-63	Error Code	Read only	Read only
✓	09-70	Communication Card Address	DeviceNet: 0–63 Profibus-DP: 1–125	1
✓	09-71	Communication Card Speed Setting (for Devicenet)	Standard DeviceNet: 0: 125 Kbps 1: 250 Kbps 2: 500 Kbps 3: 1 Mbps (Delta only) Non-standard DeviceNet: (Delta Only) 0: 10 Kbps 1: 20 Kbps 2: 50 Kbps 3: 100 Kbps 4: 125 Kbps 5: 250 Kbps 6: 500 Kbps 7: 800 Kbps 8: 1 Mbps	2
✓	09-72	Additional Settings for Communication Card Speed (for Devicenet)	0: Standard DeviceNet In this mode, the baud rate can only be 125 Kbps, 250 Kbps or 500 Kbps in standard DeviceNet speed 1: Non-standard DeviceNet In this mode, DeviceNet baud rate can be same as that for CANopen (0–8).	0

	Pr.	Parameter Name	Setting Range	Default
	09-74	Communication Card Control Flag	bit0: set the EDS identity definition of EIP card bit0 = 0: identify EIP card by the drive's family bit0 = 1: identify EIP card by the drive's series	1
✓	09-75	Communication Card IP Configuration (for Ethernet)	0: Static IP 1: Dynamic IP (DHCP)	0
✓	09-76	Communication Card IP Address 1 (for EtherNet)	0–65535	0
✓	09-77	Communication Card IP Address 2 (for EtherNet)	0–65535	0
✓	09-78	Communication Card IP Address 3 (for EtherNet)	0–65535	0
✓	09-79	Communication Card IP Address 4 (for EtherNet)	0–65535	0
✓	09-80	Communication Card Address Mask 1 (for EtherNet)	0–65535	0
✓	09-81	Communication Card Address Mask 2 (for EtherNet)	0–65535	0
✓	09-82	Communication Card Address Mask 3 (for EtherNet)	0–65535	0
✓	09-83	Communication Card Address Mask 4 (for EtherNet)	0–65535	0
✓	09-84	Communication Card Gateway Address 1 (for EtherNet)	0–65535	0
✓	09-85	Communication Card Gateway Address 2 (for EtherNet)	0–65535	0
✓	09-86	Communication Card Gateway Address 3 (for EtherNet)	0–65535	0
✓	09-87	Communication Card Gateway Address 4 (for EtherNet)	0–65535	0
✓	09-88	Communication Card Password (Low Word) (for EtherNet)	0–99	0
✓	09-89	Communication Card Password (High Word) (for EtherNet)	0–99	0
✓	09-90	Reset Communication Card (for EtherNet)	0: Disable 1: Reset to defaults	0
✓	09-91	Additional Settings for The Communication Card (for EtherNet)	bit0: Enable IP filter bit1: Enable internet parameters (1bit). When the IP address is set, this bit is enabled. After updating the parameters for the	0

Pr.	Parameter Name	Setting Range	Default
		communication card, this bit changes to disabled. bit2: Enable login password (1bit). When you enter the login password, this bit is enabled. After updating the parameters for the communication card, this bit changes to disabled.	
09-92	Communication Card Status	bit0: Enable password When the communication card is set with a password, this bit is enabled. When the password is cleared, this bit is disabled.	0

10 Speed Feedback Control Parameters

	Pr.	Parameter Name	Setting Range	Default
	10-00	Encoder Type Selection	0: Disable 1: ABZ 2: ABZ (Delta Encoder for Delta permanent magnet synchronous AC motor) 3: Resolver 4: ABZ / UVW 5: MI8 single-phase pulse input 6: Sin / Cos, absolute 7: Sin / Cos, incremental 8: Tamagawa absolute communication encoder	0
	10-01	Encoder Pulses per Revolution	1–65535	600
	10-02	Encoder Input Type Setting	0: Disable 1: A / B phase pulse inputs, run forward if A-phase leads B-phase by 90 degrees 2: A / B phase pulse inputs, run forward if B-phase leads A-phase by 90 degrees 3: A-phase is a pulse input and B-phase is a direction input (L = reverse direction, H = forward direction) 4: A-phase is a pulse input and B-phase is a direction input (L = forward direction, H = reverse direction) 5: Single-phase input	0
✓	10-03	Frequency Division Output Setting (Denominator)	1–255	1
✓	10-04	Mechanical Gear at Load Side A1	1–65535	100
✓	10-05	Mechanical Gear at Motor Side B1	1–65535	100
✓	10-06	Mechanical Gear at Load Side A2	1–65535	100
✓	10-07	Mechanical Gear at Motor Side B2	1–65535	100
✓	10-08	Treatment for Encoder / Speed Observer Feedback Fault	0: Warn and continue operation 1: Fault and ramp to stop 2: Fault and coast to stop	2
✓	10-09	Detection Time of Encoder / Speed Observer Feedback Fault	0.0–10.0 sec. 0: Disable	1.0
✓	10-10	Encoder / Speed Observer Stall Level	0–120% 0: No function	115
✓	10-11	Detection Time of Encoder / Speed Observer Stall	0.0–2.0 sec.	0.1

	Pr.	Parameter Name	Setting Range	Default
✓	10-12	Encoder / Speed Observer Stall Action	0: Warn and continue operation 1: Fault and ramp to stop 2: Fault and coast to stop	2
✓	10-13	Encoder / Speed Observer Slip Range	0–50% 0: No function	50
✓	10-14	Detection Time of Encoder / Speed Observer Slip	0.0–10.0 sec.	0.5
✓	10-15	Encoder / Speed Observer Stall and Slip Error Action	0: Warn and continue operation 1: Fault and ramp to stop 2: Fault and coast to stop	2
	10-16	Pulse Input Type Setting	0: Disable 1: Phases A and B are pulse inputs, forward direction if A-phase leads B-phase by 90 degrees 2: Phases A and B are pulse inputs, forward direction if B-phase leads A-phase by 90 degrees 3: Phase A is a pulse input and phase B is a direction input (L = reverse direction, H = forward direction). 4: Phase A is a pulse input and phase B is a direction input. (L = forward direction, H = reverse direction). 5: Single-phase pulse input (MI8)	0
✓	10-17	Electrical Gear A	1–65535	100
✓	10-18	Electrical Gear B	1–65535	100
	10-19	Encoder Single-Turn Resolution	0–17 bit	17
	10-20	Encoder Multi-Turn Resolution	0–16 bit	16
✓	10-21	PG2 Pulse Input Speed Command Low Pass Filter Time	0.000–65.535 sec.	0.100
	10-23	PG Control Flag	bit0: Enable battery power detection function bit0 = 0: Disable bit0 =1: Enable	1
✓	10-24	FOC & TQC Function Control	bit0: ASR control at sensorless torque (0: use PI as ASR; 1: use P as ASR) bit11: Activate DC braking when executing zero torque command (0: ON; 1: OFF) bit12: FOC Sensorless mode, cross zero means speed goes from negative to positive or reverse direction (0: determined by stator frequency; 1: determined by speed	0

	Pr.	Parameter Name	Setting Range	Default
			command) bit15: Direction control at open loop status (0: Switch ON direction control; 1: Switch OFF direction control)	
✓	10-25	FOC Bandwidth for Speed Observer	20.0–100.0 Hz	40.0
✓	10-26	FOC Minimum Stator Frequency	0.0–10.0%fN	2.0
✓	10-27	FOC Low-Pass Filter Time Constant	1–1000 ms	50
✓	10-28	FOC Gain for Excitation Current Rise Time	33–300%Tr	100
✓	10-29	Upper Limit of Frequency Deviation	0.00–200.00 Hz	20.00
	10-30	Resolver Pole Pair	1–50 pole pairs	1
✓	10-31	I/F Mode, Current Command	0–150% rated current of the motor	40
✓	10-32	PM FOC Sensorless Speed Estimator Bandwidth (High Speed)	0.00–600.00Hz	5.00
✓	10-33	PM FOC Sensorless Speed Estimator Bandwidth (Low Speed)	0.00–600.00 Hz	1.00
✓	10-34	PM Sensorless Speed Estimator Low-Pass Filter Gain	0.00–655.35	1.00
✓	10-35	AMR (Kp) Gain	0.00–3.00	1.00
✓	10-36	AMR (Ki) Gain	0.00–3.00	1.00
✓	10-37	PM Sensorless Control Word	0000–FFFFh	0000h
✓	10-39	Frequency to Switch from I/F Mode to PM Sensorless Mode (Frequency to Switch from IMVF Mode to IMFOCPG Mode when Pr.11-00 bit11=1 in IMFOCPG Mode)	0.00–599.00 Hz	20.00
✓	10-40	Frequency to Switch from PM Sensorless Mode to I/F Mode (Frequency to Switch from IMFOCPG Mode to IMVF Mode when Pr.11-00 bit11=1 in IMFOCPG Mode)	0.00–599.00 Hz / 30.00–599.00 Hz	20.00 / 40.00
✓	10-41	I/F Mode, Low Pass-Filter Time	0.0–6.0 sec.	0.2
✓	10-42	Initial Angle Detection Pulse Value	0.0–3.0	1.0

	Pr.	Parameter Name	Setting Range	Default
	10-43	PG Card Version	0.00–655.35	Read only
	10-47	PG1 Pulse Imputation Scaling Factor	0–3 0: x1 1: x2 2: x4 3: x8	0
✓	10-49	Zero Voltage Time during Start-Up	0.000–60.000 sec.	0.000
✓	10-50	Reverse Angle Limit (Electrical Angle)	0.00–30.00 degrees	10.00
✓	10-51	Injection Frequency	0–1200 Hz	500
✓	10-52	Injection Magnitude	0.0–200.0 V 230V models: 0.0–100.0 V 460V models: 0.0–200.0 V	15.0 30.0
✓	10-53	PM Initial Rotor Position Detection Method	0: Disable 1: Force attracting the rotor to zero degrees 2: High frequency injection 3: Pulse injection	0
✓	10-54	Magnetic Flux Linkage Estimate Low-Speed Gain	10–1000%	100
✓	10-55	Magnetic Flux Linkage Estimate High-Speed Gain	10–1000%	100
✓	10-56	Kp of Phase-Locked Loop	10–1000%	100
✓	10-57	Ki of Phase-Locked Loop	10–1000%	100
✓	10-58	Mutual Inductance Gain Compensation	0.00~655.35	1.00
	10-60	Coordinate Axis System Setting	bit0–3: Axis control mode 0: Increment operation 1: Absolute operation (only for absolute encoder) bit4–7: Coordinate axis mode 0: Linear axis 0x6064 position output range is +/-2^{31} 1: Rotating axis 1 0x6064 position output limits in the setting for Pr.10-61 and Pr.10-62 2: Rotating axis 2 0x6064 position output range is +/-2^{31}, the initial position limits in setting for Pr.11-61 and Pr.11-62 when initializing (power ON, homing)	1

Pr.	Parameter Name	Setting Range	Default
		bit8–11: Encoder overflow treatment 0: Warn but continue operation until stop 1: Warn and stop 2: No warn and continue operation bit12–15: Encoder mode 1: Increment encoder 2: Absolute encoder	
10-61	Mechanical Cycle Range (High Word)	0–65535	0
10-62	Mechanical Cycle Range (Low Word)	0–65535	0

11 Advanced Parameters

	Pr.	Parameter Name	Setting Range	Default
	11-00	System Control	bit0: Auto-tuning for ASR bit1: Inertia estimate (only for FOCPG control mode) bit2: Zero-speed servo bit6: 0 Hz linear-cross bit7: Saving or not saving the frequency bit8: Maximum speed for point-to-point position control bit11: Switch between IMFOCPG and IMVF modes	0000h
	11-01	Per-Unit of System Inertia	1–65535 (256 = 1PU)	256
✓	11-02	ASR1 / ASR2 Switch Frequency	5.00–599.00 Hz	7.00
✓	11-03	ASR1 Low-Speed Bandwidth	1– [(Pr.00-17 Carrier frequency) ÷ 40] Hz	10
✓	11-04	ASR2 High-Speed Bandwidth	1– [(Pr.00-17 Carrier frequency) ÷ 40] Hz	10
✓	11-05	Zero-Speed Bandwidth	1– [(Pr.00-17 Carrier frequency) ÷ 40] Hz	10
✓	11-06	ASR1 Gain	0–40 Hz (IM) / 1–100 Hz (PM)	10
✓	11-07	ASR1 Integral Time	0.000–10.000 sec.	0.100
✓	11-08	ASR2 Gain	0–40 Hz (IM) / 0–100 Hz (PM)	10
✓	11-09	ASR2 Integral Time	0.000–10.000 sec.	0.100
✓	11-10	ASR Gain of Zero Speed	0–40 Hz (IM) / 0–100 Hz (PM)	10
✓	11-11	ASR1 Integral Time of Zero Speed	0.000–10.000 sec.	0.100
✓	11-12	Gain for ASR Speed Feed Forward	0–150%	0
✓	11-13	PDFF Gain Value	0–200%	30
✓	11-14	ASR Output Low Pass Filter Time	0.000–0.350 sec.	0.004
✓	11-15	Notch Filter Depth	0–100 dB	0
✓	11-16	Notch Filter Frequency	0.0–6000.0 Hz	0.0
✓	11-17	Forward Motor Torque Limit Quadrant I	0–500%	500
✓	11-18	Forward Regenerative Torque Limit Quadrant II	0–500%	500
✓	11-19	Reverse Motor Torque Limit Quadrant III	0–500%	500
✓	11-20	Reverse Regenerative Torque Limit Quadrant IV	0–500%	500
✓	11-21	Flux Weakening Curve for Motor 1 Gain Value	0–200%	90

	Pr.	Parameter Name	Setting Range	Default
✓	11-22	Flux Weakening Curve for Motor 2 Gain Value	0–200%	90
✓	11-23	Flux Weakening Area Speed Response	0–150%	65
✓	11-24	APR Gain	0.00–40.00 Hz (IM) / 0–100.00 Hz (PM)	5.00
✓	11-25	Gain Value of the APR Feed Forward	0–100	90
✓	11-26	APR Feed Forward Low Pass Filter Bandwidth	0.00–655.35 Hz.	10.00
✓	11-27	Maximum Torque Command	0–500%	100
✓	11-28	Torque Offset Source	0: Disable 1: Analog signal input (Pr.03-00) 2: Pr.11-29 3: Controlled through external terminals (Pr.11-30–11-32)	0
✓	11-29	Torque Offset Setting	-100.0–100.0%	0.0
✓	11-30	High Torque Offset	-100.0–100.0%	30.0
✓	11-31	Middle Torque Offset	-100.0–100.0%	20.0
✓	11-32	Low Torque Offset	-100.0–100.0%	10.0
✓	11-33	Torque Command Source	0: Digital keypad 1: RS-485 communication (Pr.11-34) 2: Analog signal input (Pr.03-00–03-02) 3: CANopen 5: Communication card	0
✓	11-34	Torque Command	-100.0–100.0% (Pr.11-27 set value = 100%)	0.0
✓	11-35	Torque Command Filter Time	0.000–1.000 sec.	0.000
	11-36	Speed Limit Selection	0: Set by Pr.11-37 (Forward speed limit) and Pr.11-38 (Reverse speed limit) 1: Set by Pr.00-20 (Master frequency source command) and Pr.11-37, Pr.11-38 2: Set by Pr.00-20 (Master frequency source command).	0
✓	11-37	Forward Speed Limit (Torque Mode)	0–120%	10
✓	11-38	Reverse Speed Limit (Torque Mode)	0–120%	10
	11-39	Zero Torque Command Mode Selection	0: Torque mode 1: Speed mode	0
✓	11-40	Position Control Command Source	0: Input from internal register 1: Input from external pulse	0

	Pr.	Parameter Name	Setting Range	Default
			2: RS-485 3: CANopen 5: Communication card	
✓	11-42	System Control Flag	0000–FFFFh	0000h
✓	11-43	Position Control Maximum Frequency	0.00–599.00 Hz	10.00
✓	11-44	Position Control Acceleration Time	0.00–655.35 sec.	1.00
✓	11-45	Position Control Deceleration Time	0.00–655.35 sec.	1.00
✓	11-46	Torque Output Filter Time	0.000–65.535 sec.	0.050
✓	11-47	Notch Filter Bandwidth	0–1000 Hz	0
✓	11-48	ASR Feed Forward Low Pass Filter Time	0.000–65.535 sec.	0.000
	11-49	Inertia Estimation Filter Time	0–65535 sec.	3
	11-50	APR S-Curve Time	0.000–1.000 sec.	0.300
✓	11-51	Maximum Allowable Position Error	0–65535	1000
✓	11-52	Allowable Position Error Range	0–65535	10
✓	11-53	Allowable Position Error Cumulative Time	0.000–65.535 sec.	0.500
✓	11-54	Treatment to the Large Position Control Error	0: Warn and continue operation 1: Fault and ramp to stop 2: Fault and coast to stop	0
✓	11-56	Software Positive Limit (High Word)	-32768–32767	30000
✓	11-57	Software Positive Limit (Low Word)	0–65535	0
✓	11-58	Software Negative Limit (High Word)	-32768–32767	-30000
✓	11-59	Software Negative Limit (Low Word)	0–65535	0
✓	11-60	Position Control bit	bit0: Enable position memory function bit1: The pulse per revolution at load side counts by ppr bit2: Enable software limit switch function bit5: Action after Homing completed	000Ah

	Pr.	Parameter Name	Setting Range	Default
			bit8: Set operation control direction bit9: Speed unit selection bit10: Speed unit selection bit11: Speed unit multiple bit12: Absolute encoder is configured for incremental encoder application bit14: APR feed forward gain changes as the control mode switches	
	11-62	Encoder At Load Side ppr Number (High byte)	0–65535	0
	11-63	Encoder At Load Side ppr Number (Low byte)	0–65535	2400
	11-64	Single-Point Positioning Rising Speed	0.10–depending on the maximum setting value calculated by setting value of Pr.11-43 and Pr.11-45	10.00
✓	11-65	Single-Point Positioning Position (High byte)	0–ppr number at load side	0
✓	11-66	Single-Point Positioning Position (Low byte)	0–ppr number at load side	0
	11-68	Homing Method	0000h–0128h	0008h
	11-69	Homing Control Time Out	0.0–6000.0 sec.	60.0
✓	11-70	Homing Control 1st Step Speed	0.00–599.00 Hz	8.00
✓	11-71	Homing Control 2nd Step Speed	0.00–599.00 Hz	2.00
✓	11-72	Homing Control Acceleration / Deceleration Time (0–Homing Control 1st Step Speed)	0.00–600.00 sec.	10.00
✓	11-73	Homing Control Offset (Revolution)	-30000–30000 revolutions (Pr.10-00 = 8: -16383–16383)	0
✓	11-74	Homing Control Offset (Pulse)	Refer to Pr.10-01 setting	0
✓	11-75	Position Record (Revolution)	-30000–30000 revolutions	0
✓	11-76	Position Record (Pulse)	Refer to Pr.10-01 setting	0
✓	11-78	HALT Revived Selection	0: Stopped 1: Continue according to the previous position command	0

13 Application Parameters by Industry

Pr.	Parameter Name	Setting Range	Default
13-00	Industry-Specific Parameter Application	0: Disable 1: User-defined parameter 2: Compressor (IM) 3: Fan 4: Pump 10: Air Handling Unit, AHU	00

14 Extension Card Parameter

	Pr.	Parameter Name	Setting Range	Default
✓	14-00	Extension Card Input Terminal Selection (AI10)	0: Disable 1: Frequency command 2: Torque command (torque limit under speed mode) 3: Torque compensation command 4: PID target value 5: PID feedback signal 6: Thermistor (PTC / KTY-84) input value 7: Positive torque limit 8: Negative torque limit 9: Regenerative torque limit 10: Positive / negative torque limit 11: PT100 thermistor input value 13: PID compensation value	0
✓	14-01	Extension Card Input Terminal Selection (AI11)		0
✓	14-08	Analog Input Filter Time (AI10)	0.00–20.00 sec.	0.01
✓	14-09	Analog Input Filter Time (AI11)	0.00–20.00 sec.	0.01
	14-10	Analog Input 4–20 mA Signal Loss Selection (AI10)	0: Disable 1: Continue operation at the last frequency 2: Decelerate to 0 Hz 3: Stop immediately and display ACE 4: Operates with output frequency lower limit (Pr.01-11) and displays ANL	0
	14-11	Analog Input 4–20 mA Signal Loss Selection (AI11)		0
✓	14-12	Extension Card Output Terminal Selection (AO10)	0: Output frequency (Hz) 1: Frequency command (Hz) 2: Motor speed (Hz) 3: Output current (rms) 4: Output voltage 5: DC bus voltage 6: Power factor 7: Power 8: Torque 9: AVI 10: ACI 11: AUI 12: Iq current command 13: Iq feedback value 14: Id current command 15: Id feedback value 19: PG2 frequency command	0
✓	14-13	Extension Card Output Terminal Selection (AO11)		0

	Pr.	Parameter Name	Setting Range	Default
			20: CANopen analog output 21: RS-485 analog output 22: Communication card analog output 23: Constant voltage output 25: CANopen and RS-485 analog output	
✓	14-14	Analog Output 1 Gain Output (AO10)	0.0–500.0%	100.0
✓	14-15	Analog Output 1 Gain Output (AO11)	0.0–500.0%	100.0
✓	14-16	Analog Output 1 in 0–10 V REV Direction (AO10)	0: Absolute value of output voltage 1: Reverse output 0 V; Forward output 0–10 V 2: Reverse output 5–0 V; Forward output 5–10 V	0
✓	14-17	Analog Output 1 in 0–10 V REV Direction (AO11)		0
✓	14-18	Extension Card Input Selection (AI10)	0: 0–10 V (AVI10) 1: 0–20 mA (ACI10) 2: 4–20 mA (ACI10)	0
✓	14-19	Extension Card Input Selection (AI11)	0: 0–10 V (AVI11) 1: 0–20 mA (ACI11) 2: 4–20 mA (ACI11)	0
✓	14-20	AO10 DC Output Setting Level	0.00–100.00%	0.00
✓	14-21	AO11 DC Output Setting Level	0.00–100.00%	0.00
✓	14-22	AO10 Filter Output Time	0.00–20.00 sec.	0.01
✓	14-23	AO11 Filter Output Time	0.00–20.00 sec.	0.01
✓	14-36	AO10 Output Selection	0: 0–10 V 1: 0–20 mA 2: 4–20 mA	0
✓	14-37	AO11 Output Selection		0

[This page intentionally left blank]

Chapter 12 Descriptions of Parameter Settings

12-1 Descriptions of Parameter Settings

12-2 Adjustment and Application

12-1 Descriptions of Parameter Settings

00 Drive Parameters

You can set this parameter during operation.

00-00 AC Motor Drive Identity Code

Default: Read only

Settings Read only

00-01 AC Motor Drive Rated Current Display

Default: Read only

Settings Read only

Pr.00-00 displays the AC motor drive identity code. Use the following specification table to check if Pr.00-01 setting is the rated current of the AC motor drive. Pr.00-01 corresponds to the identity code of the AC motor drive (Pr.00-00).

230V Models										
Frame	A				B			C		
Power (kW)	0.75	1.5	2.2	3.7	5.5	7.5	11	15	18.5	22
Power (HP)	1.0	2.0	3.0	5.0	7.5	10	15	20	25	30
Identity Code	4	6	8	10	12	14	16	18	20	22
Rated Current for Super Heavy Duty (A)	5	8	11	17	25	33	49	65	75	90

Frame	D		E		F
Power (kW)	30	37	45	55	75
Power (HP)	40	50	60	75	100
Identity Code	24	26	28	30	32
Rated Current for Super Heavy Duty (A)	120	146	180	215	255

460V Models											
Frame	A					B			C		
Power (kW)	0.75	1.5	2.2	3.7	5.5	7. 5	11	15	18.5	22	30
Power (HP)	1	2	3	5	7.5	10	15	20	25	30	40
Identity Code	5	7	9	11	13	15	17	19	21	23	25
Rated Current for Super Heavy Duty (A)	3.0	4.0	6.0	9.0	12	18	24	32	38	45	60

Frame	D0	D			E		F	G			H			
Power (kW)	37	45	55	75	90	110	132	160	185	220	280	315	355	450
Power (HP)	50	60	75	100	125	150	175	215	250	300	375	420	475	600
Identity Code	27	29	31	33	35	37	39	41	43	45	47	49	51	55
Rated Current for Super Heavy Duty (A)	73	91	110	150	180	220	250	310	370	450	550	616	683	866

Frame	D0-3	D3		
Model Name	VFD370CH43L-00	VFD450CH43L-00	VFD550CH43L-00	VFD750CH43-00
Power (kW)	37	45	55	75
Power (HP)	50	60	75	100
Identity Code	488	489	490	491
Rated Current for Super Heavy Duty (A)	73	91	110	150

00-02 Parameter Reset

Default: 0

Settings
0: No Function
1: Write protection for parameters
5: Return kWh displays to 0
6: Reset PLC (including CANopen Master Index)
7: Reset CANopen Slave Index
9: Reset all parameters to defaults (base frequency is 50 Hz)
10: Reset all parameters to defaults (base frequency is 60 Hz)

- 1: All parameters are read only except Pr.00-02, Pr.00-07 and Pr.00-08. Set Pr.00-02 to 0 before changing other parameter settings.
- 5: You can return the kWh displayed value to 0 even during drive operation. For example, you can set Pr.05-26–Pr.05-30 to 0.
- 6: Clear the internal PLC program (includes the related settings of PLC internal CANopen master)
- 7: Reset the related settings of CANopen slave.
- 9 or 10: Reset all parameters to defaults. If you have set a password (Pr.00-08), unlock the password (Pr.00-07) to clear the password you have set before you reset all parameters.
- For settings of 6, 7, 9, 10, you must reboot the motor drive after you finish the setting.

00-03 Start-up Display

Default: 0

Settings
0: F (Frequency command)
1: H (Output frequency)
2: U (User-defined, see Pr.00-04)
3: A (Output current)

- Determines the start-up display page after power is applied to the drive. The user-defined contents display according to the Pr.00-04 settings.

00-04 Content of Multi-function Display (User-defined)

Default: 3

Settings
0: Display output current (A) (Unit: Amp)
1: Display counter value (c) (Unit: CNT)
2: Display the motor's actual output frequency (H.) (Unit: Hz)
3: Display the drive's DC bus voltage (v) (Unit: V_{DC})
4: Display the drive's output voltage (E) (Unit: V_{AC})
5: Display the drive's output power angle (n) (Unit: deg)
6: Display the drive's output power (P) (Unit: kW)
7: Display the motor speed rpm (r) (Unit: rpm)
8: Display the drive's estimated output torque, motor's rated torque is 100% (t) (Unit: %)
9: Display PG feedback (G) (refer to Pr.10-00 and Pr.10-01) (Unit: PLS)

10: Display PID feedback (b) (Unit: %)
11: Display AVI analog input terminal signal (1.) (Unit: %)
12: Display ACI analog input terminal signal (2.) (Unit: %)
13: Display AUI analog input terminal signal (3.) (Unit: %)
14: Display the drive's IGBT temperature (i.) (Unit: °C)
15: Display the drive's capacitance temperature (c.) (Unit: °C)
16: The digital input status (ON / OFF) (i)
17: The digital output status (ON / OFF) (o)
18: Display multi-step speed (S)
19: The corresponding CPU digital input pin status (d)
20: The corresponding CPU digital output pin status (0.)
21: Actual motor position (PG1 of PG card) (P.) The maximum value is 32bits display
22: Pulse input frequency (PG2 of PG card) (S.)
23: Pulse input position (PG2 of PG card) (q.) The maximum value is 32bits display
24: Position command tracing error (E.)
25: Overload counting (0.00–100.00%) (o.) (Unit: %)
26: Ground fault GFF (G.) (Unit: %)
27: DC bus voltage ripple (r.) (Unit: V_{DC})
28: Display PLC register D1043 data (C)
29: Display PM pole section (EMC-PG01U application) (4.)
30: Display the output of User-defined (U)
31: Display Pr.00-05 user Gain (K)
32: Number of actual motor revolution during operation (PG card plug in and Z phase signal input) (Z.)
34: Operation speed of fan (F.) (Unit: %)
35: Control Mode display:
0 = Speed control mode (SPD)
1 = Torque control mode (TQR) (t.)
36: Present operating carrier frequency of the drive (J.) (Unit: Hz)
38: Display the drive status (6.)
39: Display the drive's estimated output torque, positive and negative, using Nt-m as unit (t 0.0: positive torque; -0.0: negative torque) (C.)
40: Torque command (L.) (Unit: %)
41: kWh display (J) (Unit: kWh)
42: PID target value (h.) (Unit: %)
43: PID compensation (o.) (Unit: %)
44: PID output frequency (b.) (Unit: Hz)
45: Hardware ID
46: Auxiliary frequency value (U.) (Unit: Hz)
47: Master frequency value (A.) (Unit: Hz)

48: Frequency value after addition and subtraction of master and auxiliary frequency (L.) (Unit: Hz)
49: Motor temperature (KTY84-130 only)
51: PMSVC torque offset
52: AI10%
53: AI11%
54: PMFOC Ke estimation value
68: STO version (d)
69: STO checksum-high word (d)
70: STO checksum-low word (d)

Explanation 1

- When Pr.10-01 is set to 1000 and Pr.10-02 is set to 1, 2, the displayed range for PG feedback is between 0–4000.
- When Pr.10-01 is set to 1000 and Pr.10-02 is set to 3, 4, 5, the displayed range for PG feedback is between 0–1000.
- Home position: If it has Z phase, Z phase will be regarded as home position. Otherwise, home position will be the encoder start up position.

Explanation 2

- It can also display negative values when setting analog input bias (Pr.03-03–03-10).
  Example: Assume that AVI input voltage is 0 V, Pr.03-03 is 10.0% and Pr.03-07 is 4 (Bias serves as the center).

Explanation 3

Example: If REV, MI1 and MI6 are ON, the following table shows the status of the terminals.
Normally opened contact (N.O.), 0: OFF, 1: ON

Terminal	MI15	MI14	MI13	MI12	MI11	MI10	MI8	MI7	MI6	MI5	MI4	MI3	MI2	MI1	REV	FWD
Status	0	0	0	0	0	0	0	0	1	0	0	0	0	1	1	0

NOTE: MI10–MI15 are the terminals for extension cards (Pr.02-26–02-31).

- The value is 0000 0000 1000 0110 in binary and 0086H in HEX. When Pr.00-04 is set to 16 or 19, the u page on the keypad displays 0086H.
- The setting value 16 is ON / OFF status of digital input according to Pr.02-12 setting, and the setting value 19 is the corresponding CPU pin ON / OFF status of the digital input.
- The FWD / REV action and MI1 (which is set to three-wire) are not affected by Pr.02-12.
- You can set 16 to monitor the digital input ON / OFF status, and then set 19 to check if the circuit is normal.

Explanation 4

Assume that RY1: Pr.02-13 is set to 9 (Drive is ready). After the drive is powered on, if there is no other abnormal status, the contact is ON. The display status is shown below.
Normally opened contact (N.O.)

Terminal	MO20	MO19	MO18	MO17	MO16	MO15	MO14	MO13	MO12	MO11	MO10	MO2	MO1	Reserved	RY2	RY1
Status	0	0	0	0	0	0	0	0	0	0	0	0	0	0	0	1

- If Pr.00-04 is set to 17 or 20, it displays in hexadecimal “0001h” with LED u page is ON in the keypad.
- The setting value 17 is ON / OFF status of digital output according to Pr.02-18 setting, and the setting value 19 is the corresponding CPU pin ON / OFF status of the digital output.

- You can set 17 to monitor the digital output ON / OFF status, and then set 20 to check if the circuit is normal.

Explanation 5

Setting value 8: 100% means the motor rated torque.

Motor rated torque = (Motor rated power × 60 ÷ 2π) ÷ Motor rated speed

Explanation 6

Setting value 25: when displayed value reaches 100.00%, the drive shows “oL” as an overload warning.

Explanation 7

Setting value 38

- bit0: The drive is running forward.
- bit1: The drive is running backward.
- bit2: The drive is ready.
- bit3: Errors occurred on the drive.
- bit4: The drive is running.
- bit5: Warnings occurred on the drive.

00-05 Coefficient Gain in Actual Output Frequency

Default: 0

Settings 0.00–160.00

Sets the user-defined unit coefficient gain. Set Pr.00-04 = 31 to display the calculation result on the screen (calculation = output frequency × Pr.00-05).

00-06 Firmware Version

Default: Read only

Settings Read only

00-07 Parameter Protection Password Input

Default: 0

Settings 0–65535

Display 0–4 (the number of password attempts allowed)

This parameter allows you to enter your password (which is set in Pr.00-08) to unlock the parameter protection and to make changes to the parameter.

To avoid problems in the future, be sure to write down the password after you set this parameter.

Pr.00-07 and Pr.00-08 are used to prevent personnel from setting other parameters by accident.

If you forget the password, clear the password setting by input 9999 and press the ENTER key, then enter 9999 again and press ENTER within 10 seconds. After decoding, all the settings return to default.

When setting is under password protection, all the parameters read 0, except Pr.00-08.

00-08 Parameter Protection Password Setting

Default: 0

Settings 0–65535

0: No password protection or password entered correctly (Pr.00-07)

1: Password has been set

This parameter is for setting the password protection. Password can be set directly the first time. After you set the password, the value of Pr.00-08 is 1, which means password protection is activated. At this time, if you want to change any of the parameter settings, you must enter the

correct password in Pr.00-07 to deactivate the password temporarily, and this would make Pr.00-08 become 0. After you finish setting the parameters, reboot the motor drive and the password is activated again.

- Entering the correct password in Pr.00-07 only temporarily deactivates the password. To permanently deactivate password protection, set Pr.00-08 to 0 manually. Otherwise, password protection is always reactivated after you reboot the motor drive.
- The keypad copy function works normally only when the password protection is deactivated (temporarily or permanently), and password set in Pr.00-08 cannot be copied to the keypad. So when copying parameters from the keypad to the motor drive, set the password manually again in the motor drive to activate password protection.

Password Decode Flow Chart

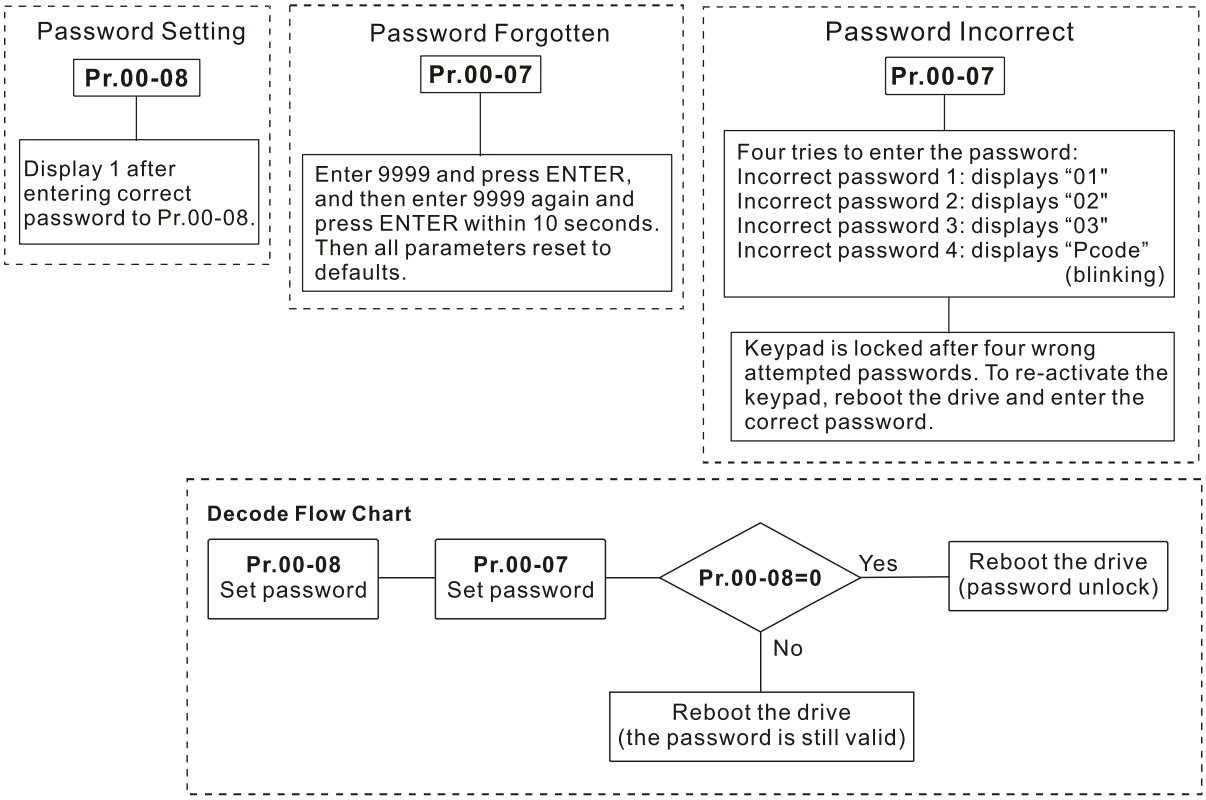

00-10 Control Mode

Default: 0

Settings 0: Speed control mode
1: Position control mode
2: Torque mode

- Determines the control mode of the AC motor drive.
- Synchronous reluctance motor only supports speed control mode and torque mode.
- The position control function is currently only available for IMFOCPG and PMFOCPG control modes.

IMFOCPG position control diagram (Pr.00-10 = 1, and Pr.00-11 = 3):

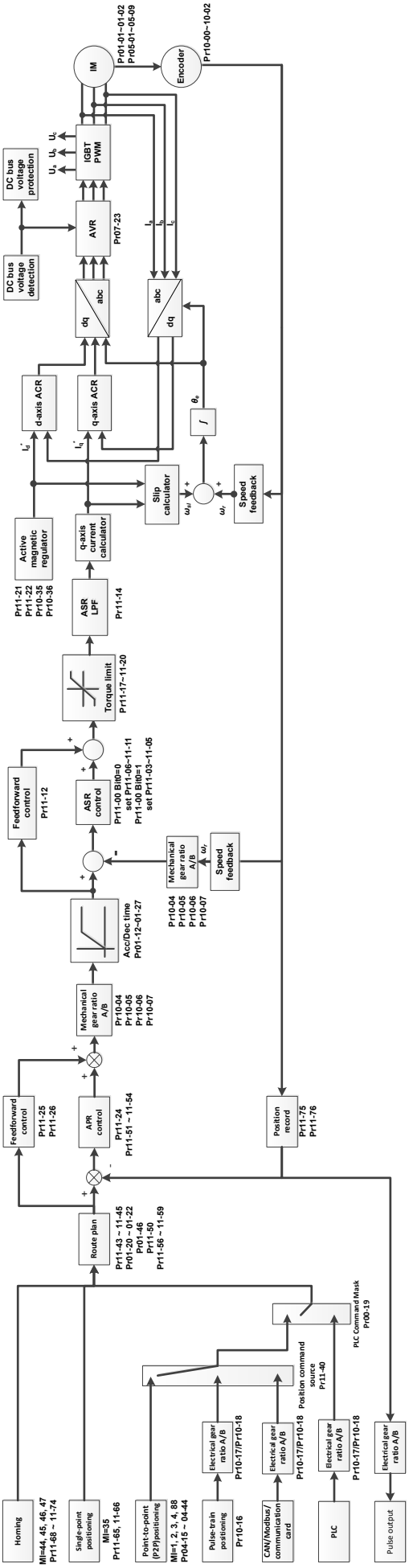

PMFOCPG position control diagram (Pr.00-10 = 1, and Pr.00-11 = 4):

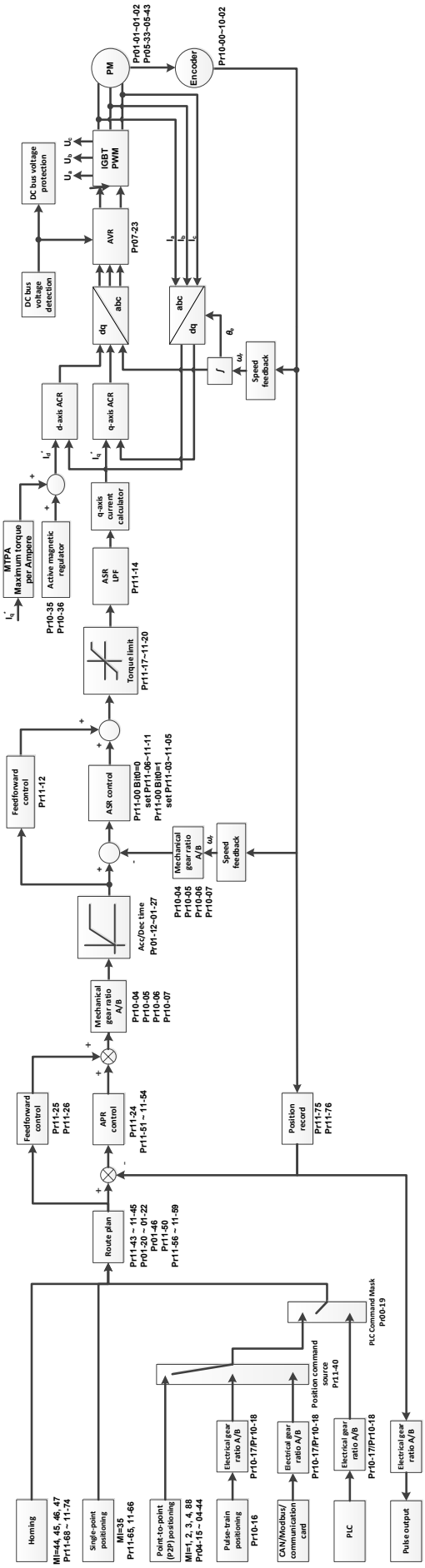

Position control diagram:

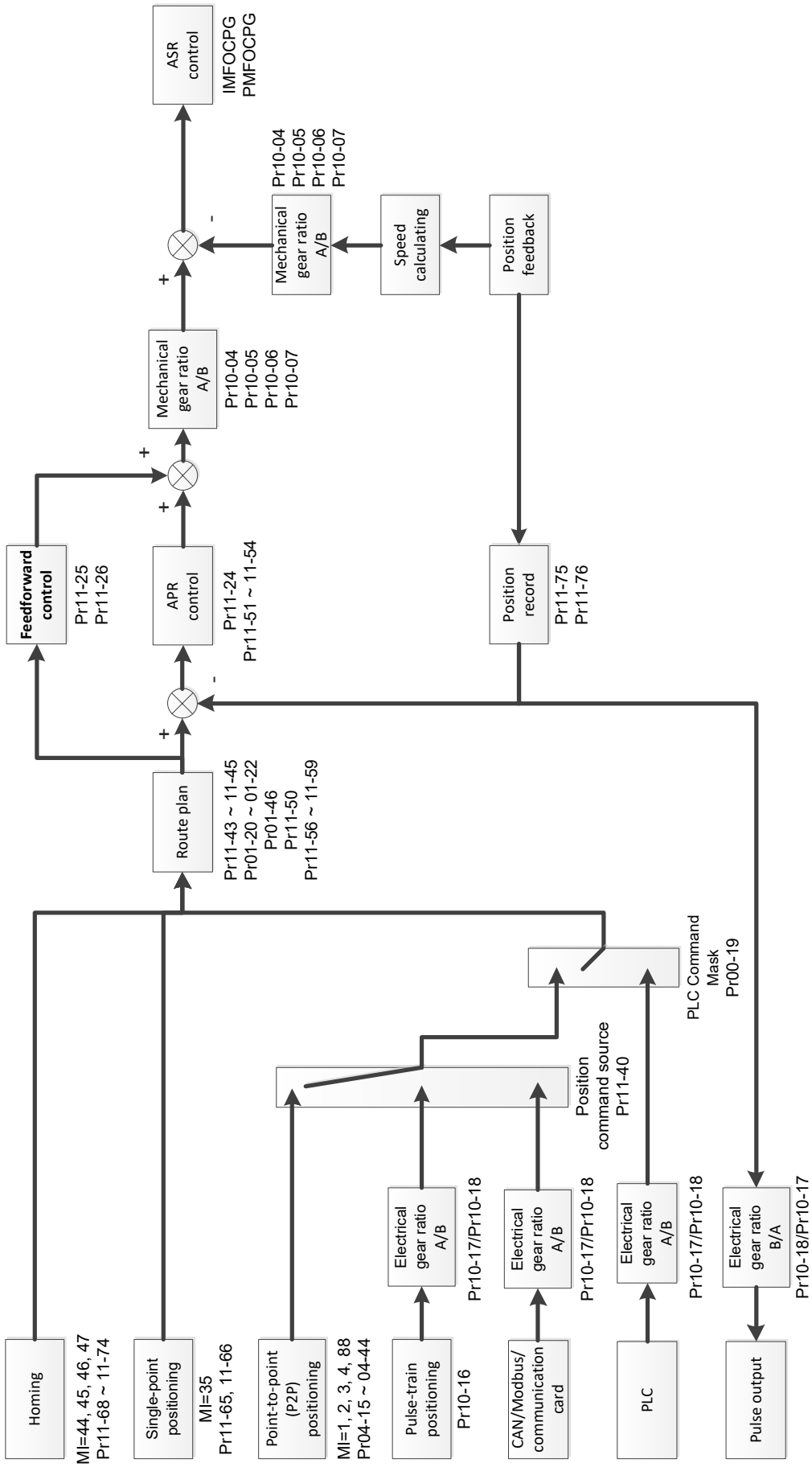

Single-point positioning control diagram:

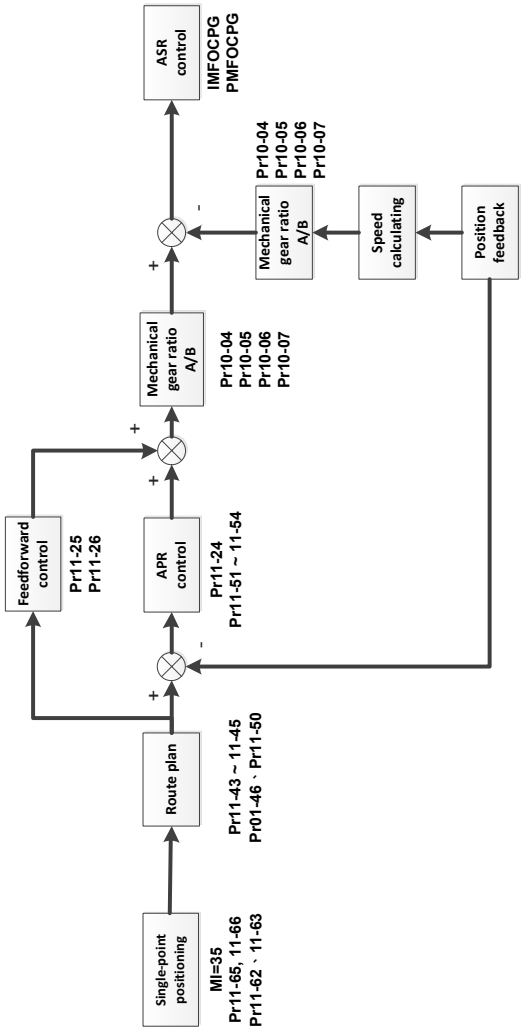

The Single-point Positioning

- The single-point positioning function is to position the motor at the Z-phase signal of the encoder (Pr.11-65 single-point positioning position high byte = 0; Pr.11-66 single-point positioning position low byte = 0), or at a specific position that is equivalent to the Z-phase signal (Pr.11-65 single-point positioning position high byte; Pr.11-66 single-point positioning position low byte).
- When single-point positioning function is enabled (MIx = 35), the route planning is according to Pr.11-65 (single-point positioning position high byte) and Pr.11-66 (single-point positioning position low byte) position settings, Pr.11-43 (maximum frequency for position control), Pr.11-44 (acceleration time for position control), and Pr.11-45 (deceleration time for position control), then the planned position command is provided to the APR position controller.
- When using the single-point positioning function, consider the mechanical gear ratio and encoder installation positions (refer to Pr.10-02–10-07 for more information).
  - Use semi-closed loop control method: when the encoder is installed at the motor side or load side.
  - Use fully-closed loop control method: when the encoder is installed at the motor side and the Z-phase signal comes from the load side.
- In the process of homing, single-point positioning function and point-to-point (hereafter “P2P”) position command input are not available; in the process of single-point positioning, homing control function and P2P position command input are not available.

Pulse-train positioning control diagram:

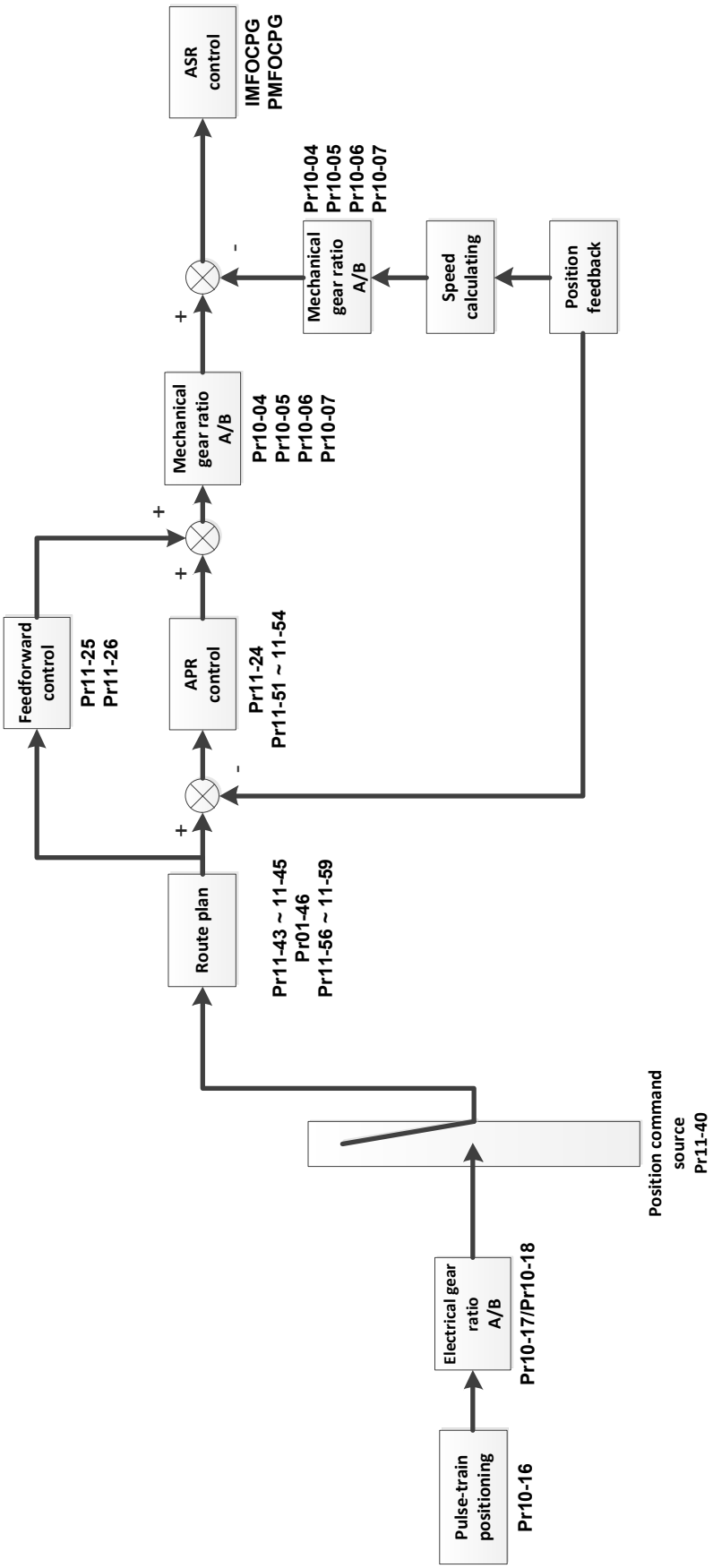

Pulse-train Positioning Position Control

- The pulse-train positioning position control uses the pulse-train command as the position command for position control.
- The pulse-train command can be either an open-collector signal or a differential signal.
- Choose either of the following three methods to enable the pulse-train positioning position control function:
  1. Set the control mode to position control mode (Pr.00-10= 1), set the external pulse-train as the position control command source (Pr.11-40 = 1), or set and activate the multi-function input terminal to position command source switch (MIx = 90).
  2. Set and activate the multi-function input terminal to speed/position mode switch (MIx = 89), set the external pulse-train as the position control command source (Pr.11-40 = 1), or set and activate the multi-function input terminal to position command source switch (MIx = 90).
  3. Set and activate the multi-function input terminal to enable pulse-train command position control (MIx = 37).
- When the encoder feedback position has reached the reference position command, the motor remains at the current reference position command.
- The motor runs according to the accumulated number of pulses given by the controller during the drive's operation. The motor is invalid and cannot be driven by the external pulse-trains given by the controller when the drive stops.
- The external pulse-trains given by the controller calculate the electrical gear ratio (B / A) before performing the position control.
- Only four types of pulse-train command inputs are available:
  (1) Pr.10-16 = 1: Phase A and B are pulse-train inputs, running forward if the A-phase leads the B-phase by 90 degrees.
  (2) Pr.10-16 = 2: Phase A and B are pulse-train inputs, running forward if the B-phase leads the A-phase by 90 degrees
  (3) Pr.10-16 = 3: Phase A is a pulse-train input and phase B is a direction input (L = reverse direction, H = forward direction)
  (4) Pr.10-16 = 4: Phase A is a pulse-train input and phase B is a direction input (L = forward direction, H = reverse direction)

Homing position control diagram:

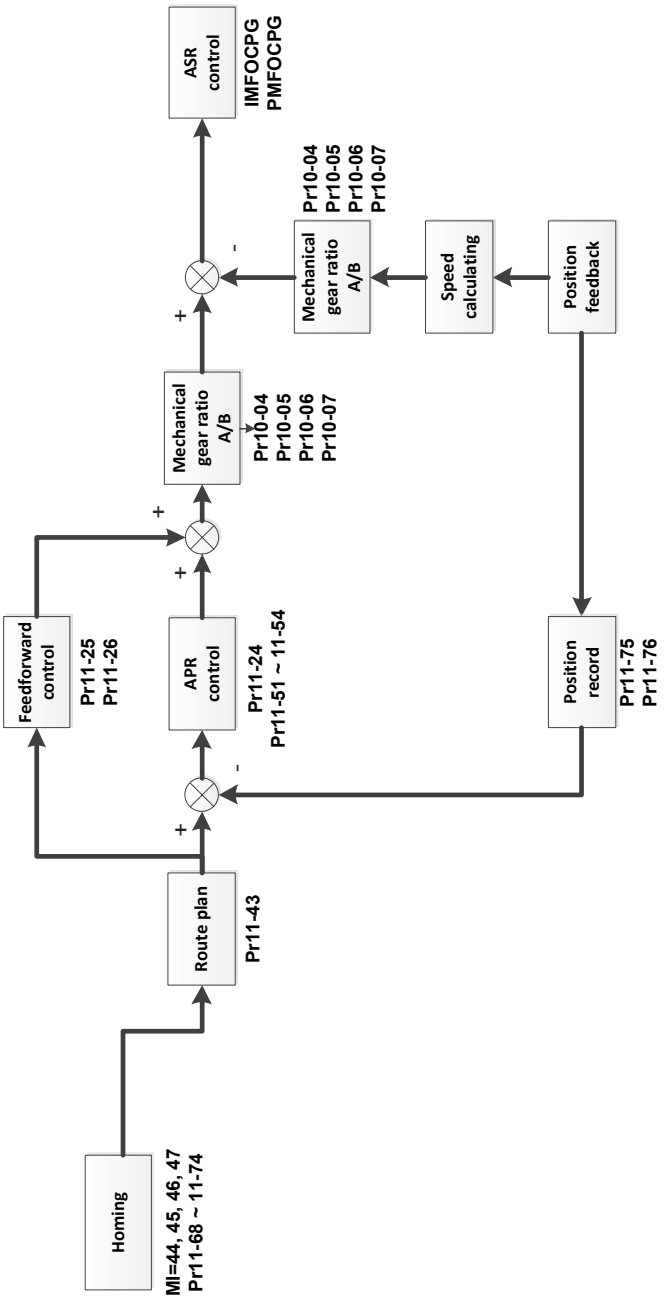

Homing Position Control

- The homing position control function determines the reference point of the motor moving coordinate system. If you use the incremental encoder, the coordinate system origin is the position where the drive is powered on. Use the homing positioning function to ensure that whenever you perform a task the reference point is in the same position.
- When you set and activate the multi-function input terminal to enable the homing function (MIx = 47) under the position control mode, the homing position control function is enabled.
- In the process of homing positioning, single-point positioning function and multi-step speed command input are not available. Only when the homing positioning or single-point positioning process is finished, the multi-step speed command is available.
- Once the homing is finished after setting the multi-function output terminal to homing completed (MOx = 49), this terminal remains ON.

Point-to-point positioning control diagram:

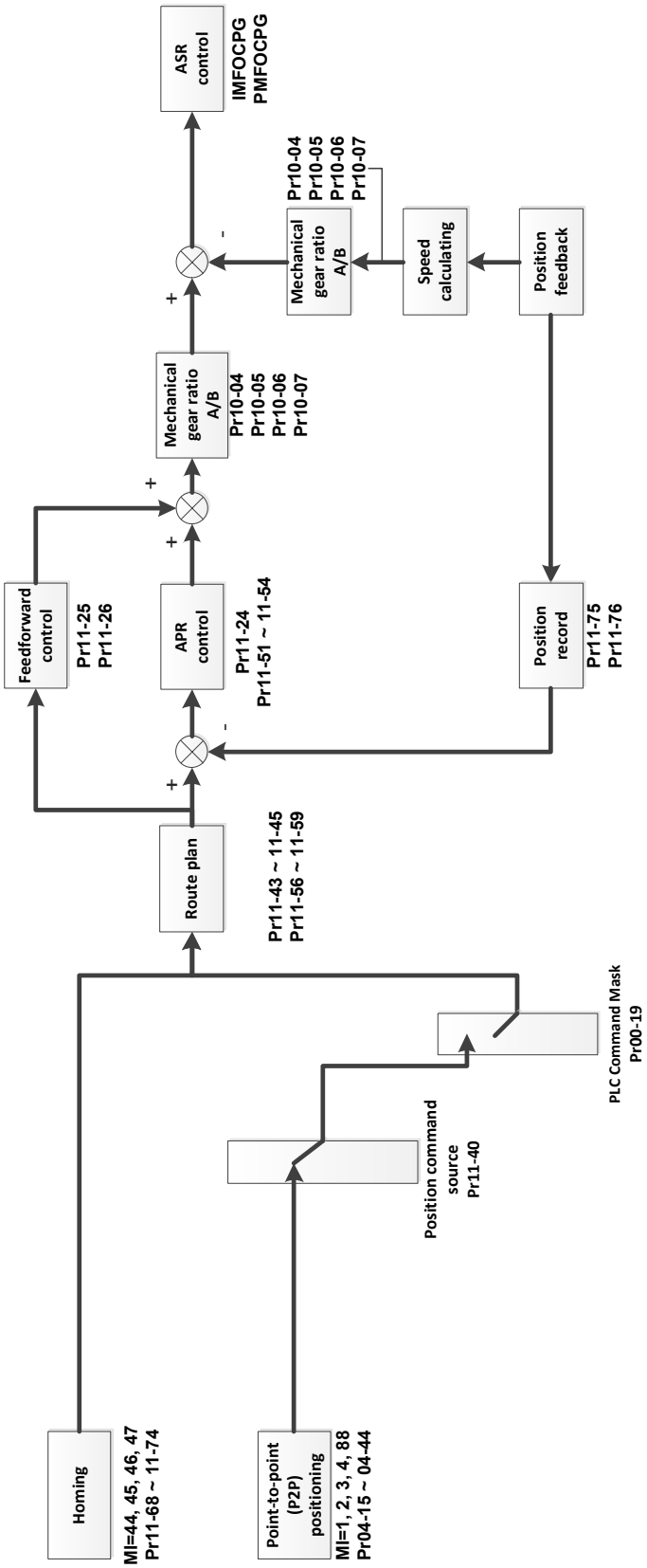

Point-to-point (P2P) Positioning Position Control

- The P2P position control is a positioning function that controls the motor operation from one position to another. This function controls the positioning position according to the encoder feedback signals and determines the positioning position through the multi-function input terminals. A maximum of four multi-function input terminals can be used at the same time to switch between 15 positions.
- When the encoder feedback position has reached the reference position command, the motor remains at the current reference position command.
- The P2P positioning position control function is an absolute position control, and its reference point is the origin obtained after homing. Thus, homing must be done before performing the P2P positioning position control function.
- The speed of the P2P positioning position control function is based on Pr.11-43 (Maximum Frequency for Position Control); the acceleration and deceleration time is based on Pr.11-44 and Pr.11-45.
- When you set and activate the multi-function input terminal to P2P position command confirmation (MIx = 88), the motor moves to a certain position (take position 1 as an example). At this time, switch the P2P position to 2 and activate MIx = 88 terminal again. Then, the motor does not move to position 1 but moves to position 2.

00-11 Speed Control Mode

Default: 0

Settings
0: IMVF (IM V/F control)
1: IMVFPG (IM V/F control+ Encoder)
2: IM / PM / SynRM SVC (IM / PM / SynRM space vector control)
3: IMFOCPG (IM FOC + Encoder)
4: PMFOCPG (PM FOC + Encoder)
5: IMFOC Sensorless (IM FOC sensorless)
6: PM Sensorless (PM FOC sensorless)
7: IPM Sensorless (Interior PM FOC sensorless)
8: SynRM Sensorless Control (SynRM FOC sensorless)

- Determines the control method of the AC motor drive:
  0: IM V/F control, you can set the proportion of V/F as required and control multiple motors simultaneously.
  1: IM V/F control + Encoder, you can use optional PG card with encoder for the closed-loop speed control.
  2: IM / PM / SynRM space vector control gets the optimal control by auto-tuning the motor parameters.
  3: IM FOC + encoder, not only can increase torque, but also can increase the accuracy of the speed control (1:1000).
  4: PM FOC + Encoder, not only can increase torque, but also can increase the accuracy of the speed control (1:1000).
  5: IM FOC sensorless, IM field oriented sensorless vector control

6: PM FOC sensorless, PM field oriented sensorless vector control

7: Interior PM FOC sensorless, Interior PM field oriented sensorless vector control

8: SynRM Sensorless vector control

📖 There are more detailed explanation of motor adjustment procedure in section 12-2

📖 When Pr.00-10 = 0, and you set Pr.00-11 to 0, the V/F control diagram is as follows.

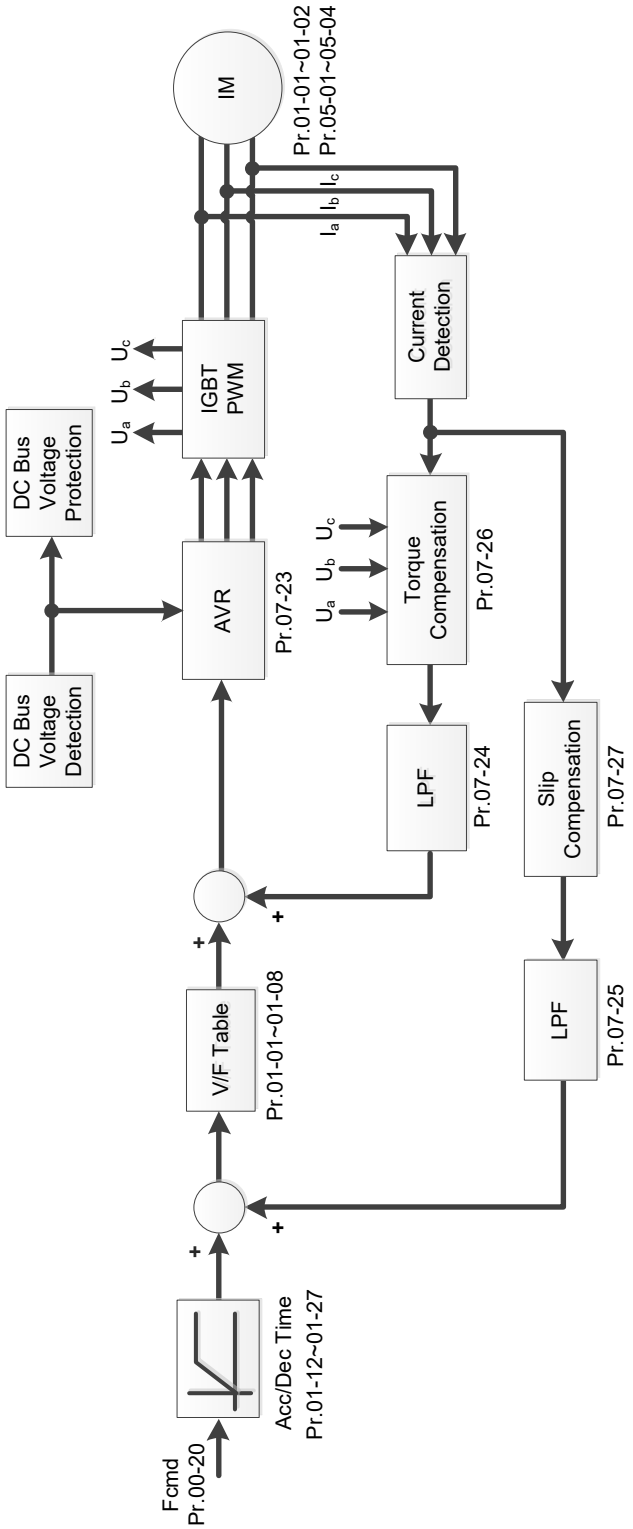

📖 When Pr.00-10 = 0, and you set Pr.00-11 to 1, the V/F control + encoder diagram is as follows.

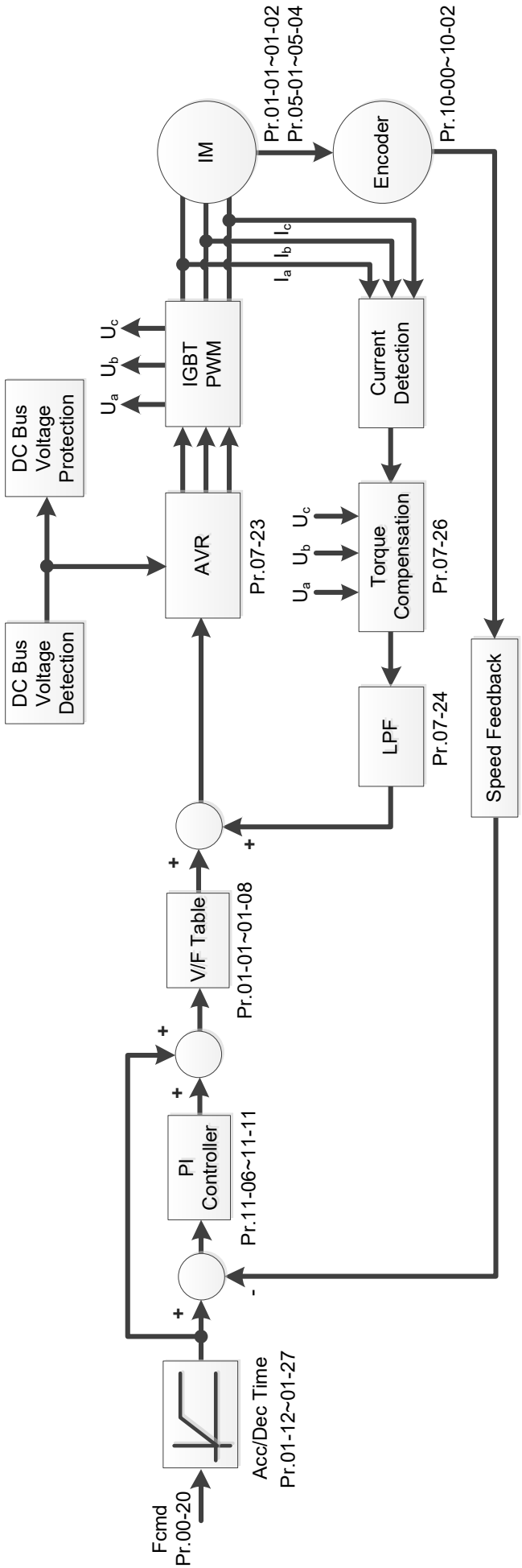

When Pr.00-10 = 0, and you set Pr.00-11 to 2, the space vector control diagram is as follows:
IM Space Vector Control (IMSVC):

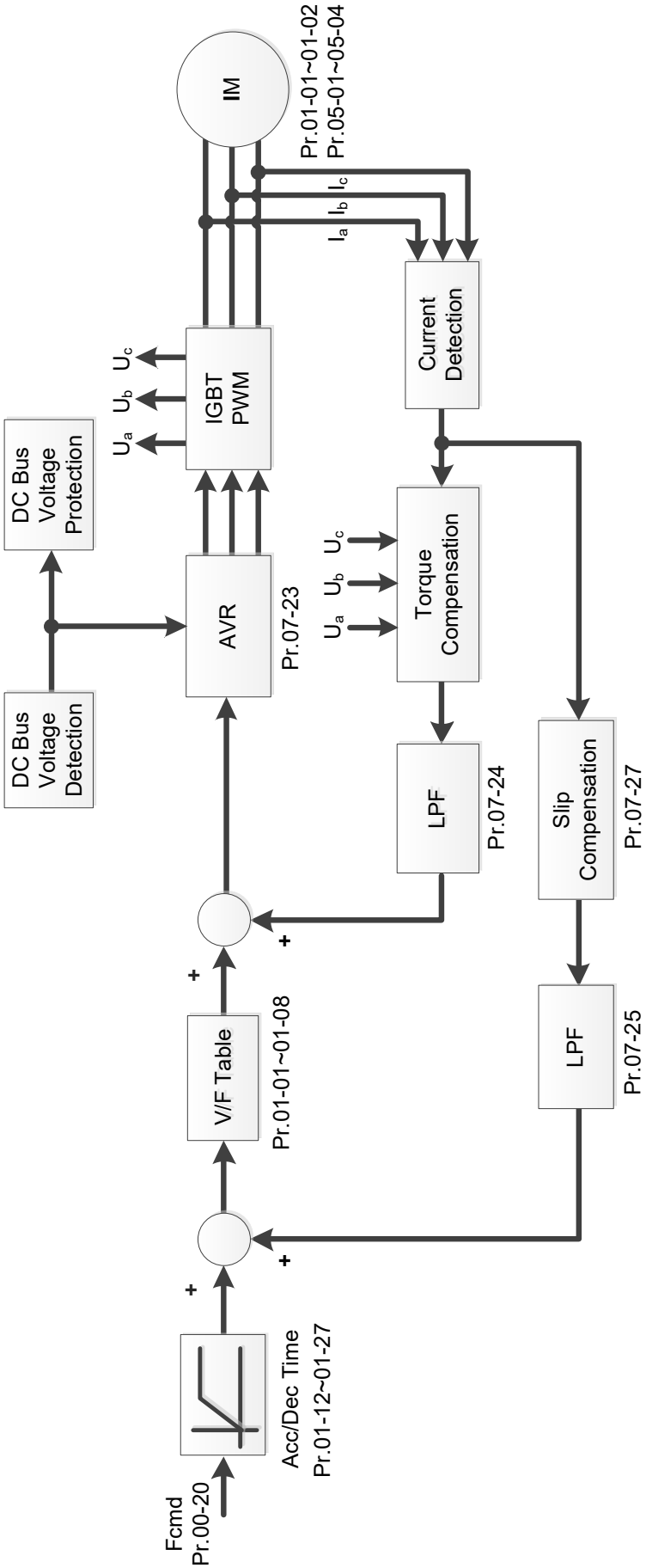

PM Space Vector Control (PMSVC):

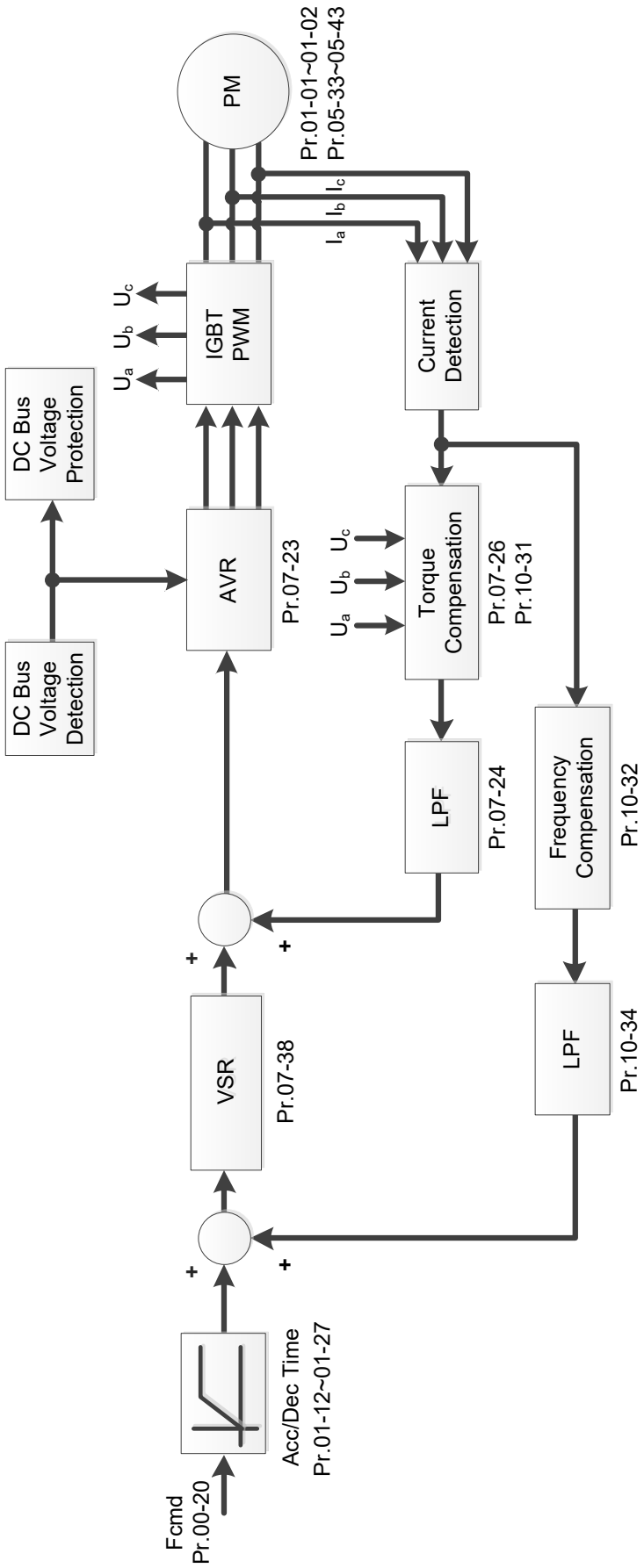

When Pr.00-10 = 0, and you set Pr.00-11 to 3, the IM FOCPG control diagram is as follows:

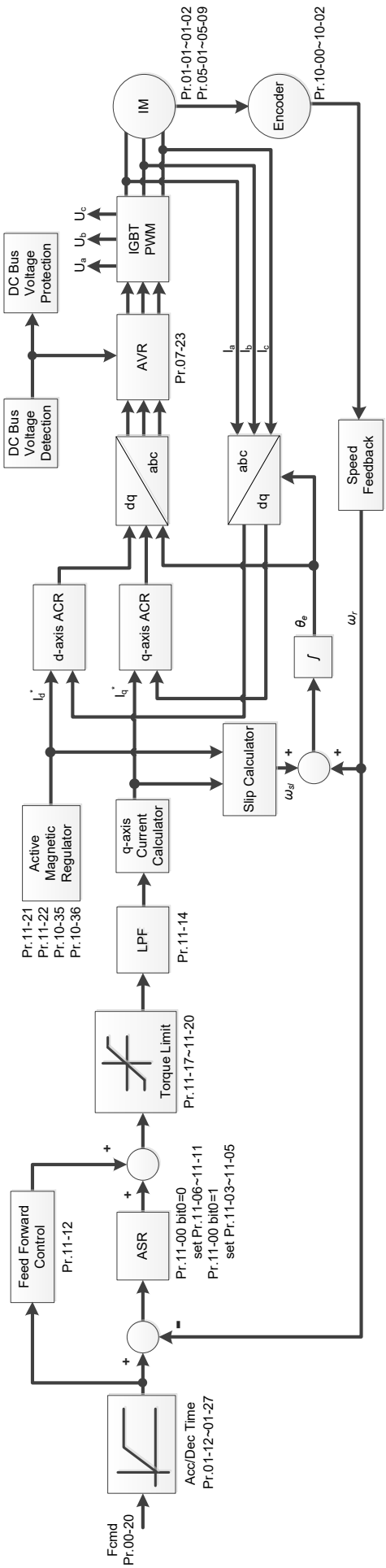

When Pr.00-10 = 0, and you set Pr.00-11 to 4, the PM FOCPG control diagram is as follows:

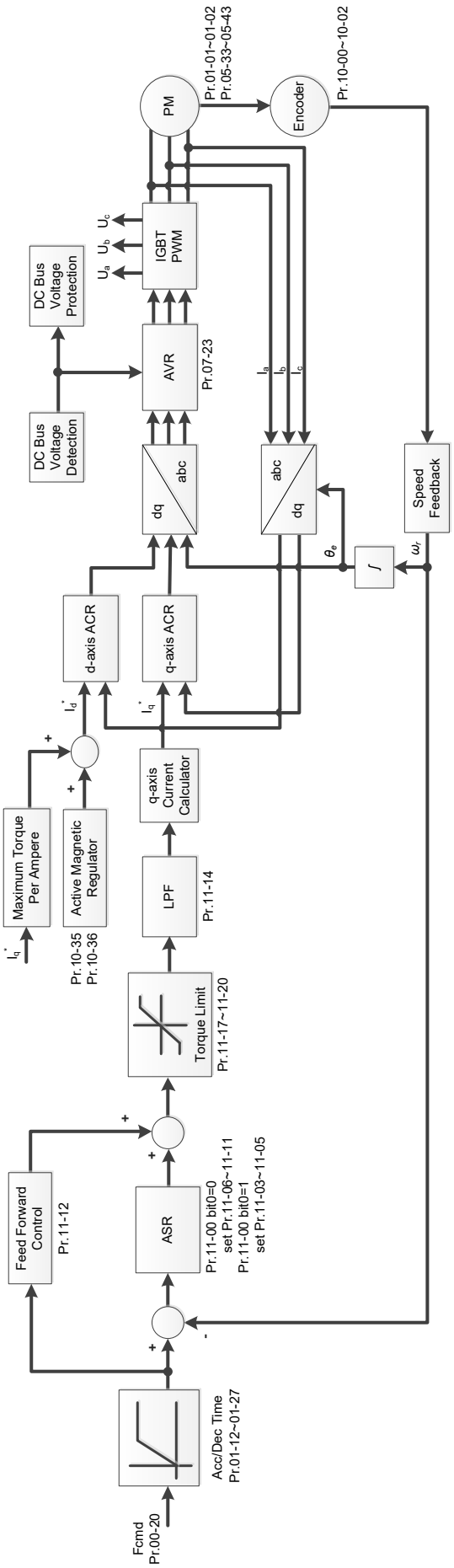

When Pr.00-10 = 0, and you set Pr.00-11 to 5, IMFOC Sensorless control diagram is as follows:

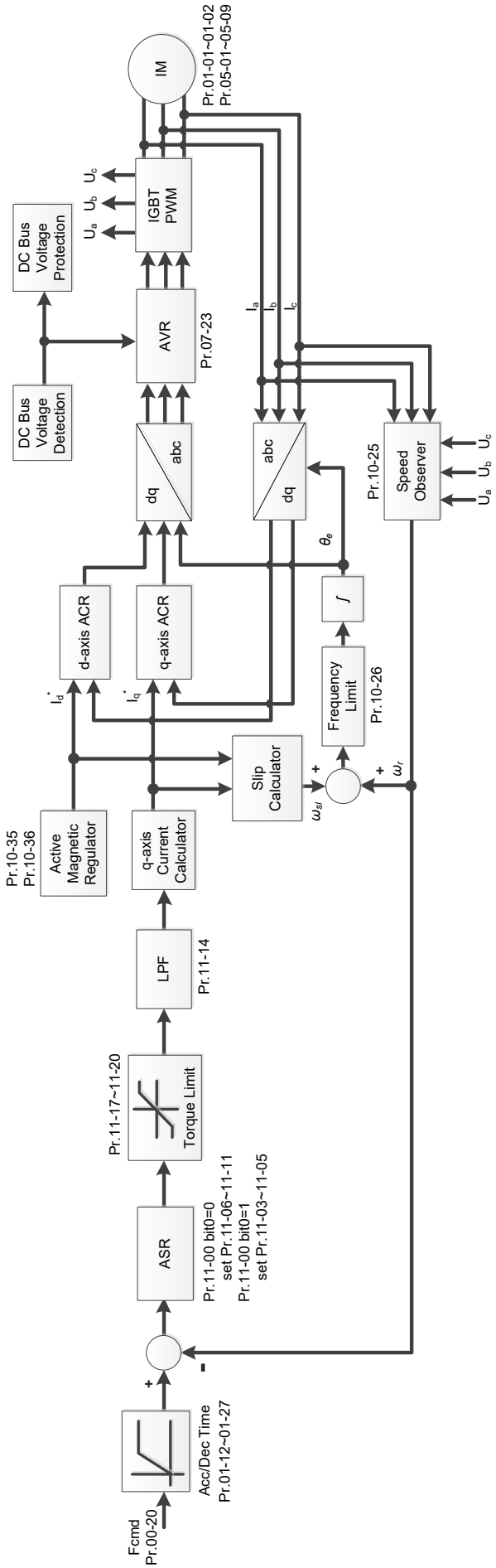

When Pr.00-10 = 0, and you set Pr.00-11 to 6, PM FOC Sensorless control diagram is as follows:

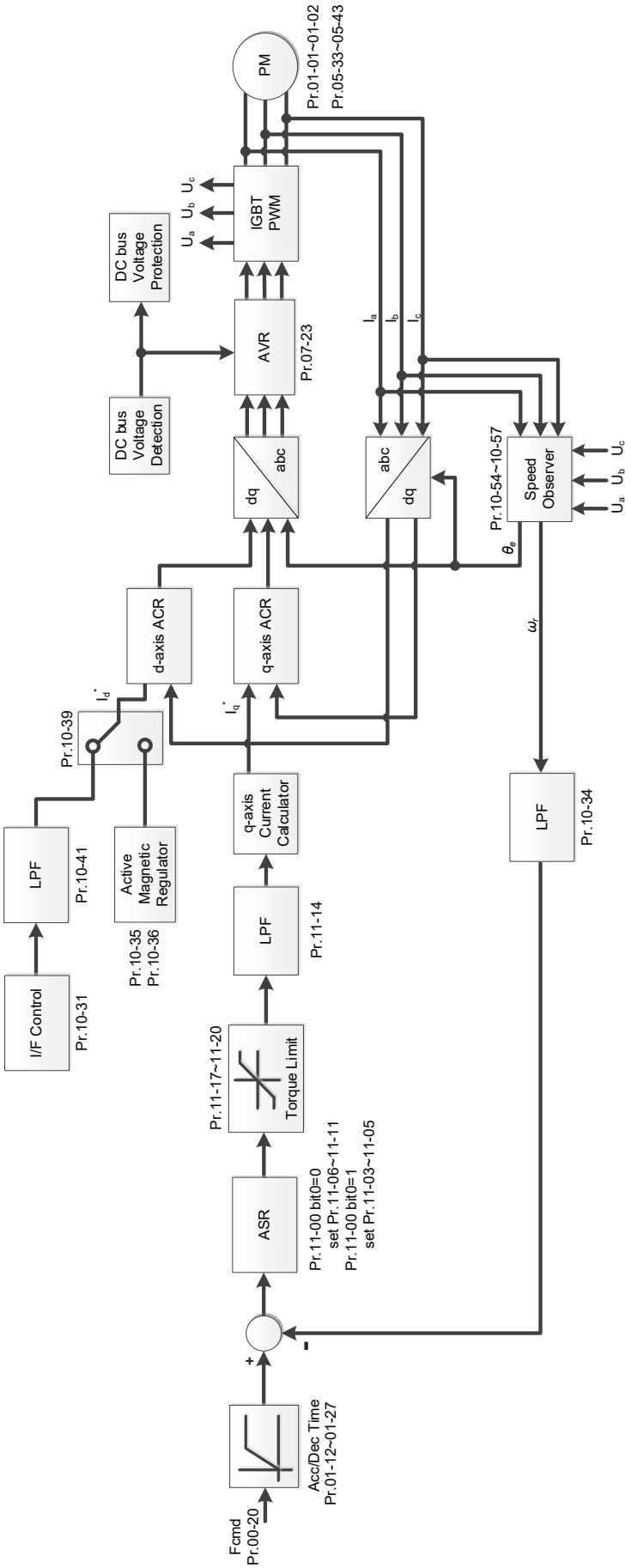

When Pr.00-10 = 0, and you set Pr.00-11 to 7, IPM FOC sensorless control diagram is as follows:

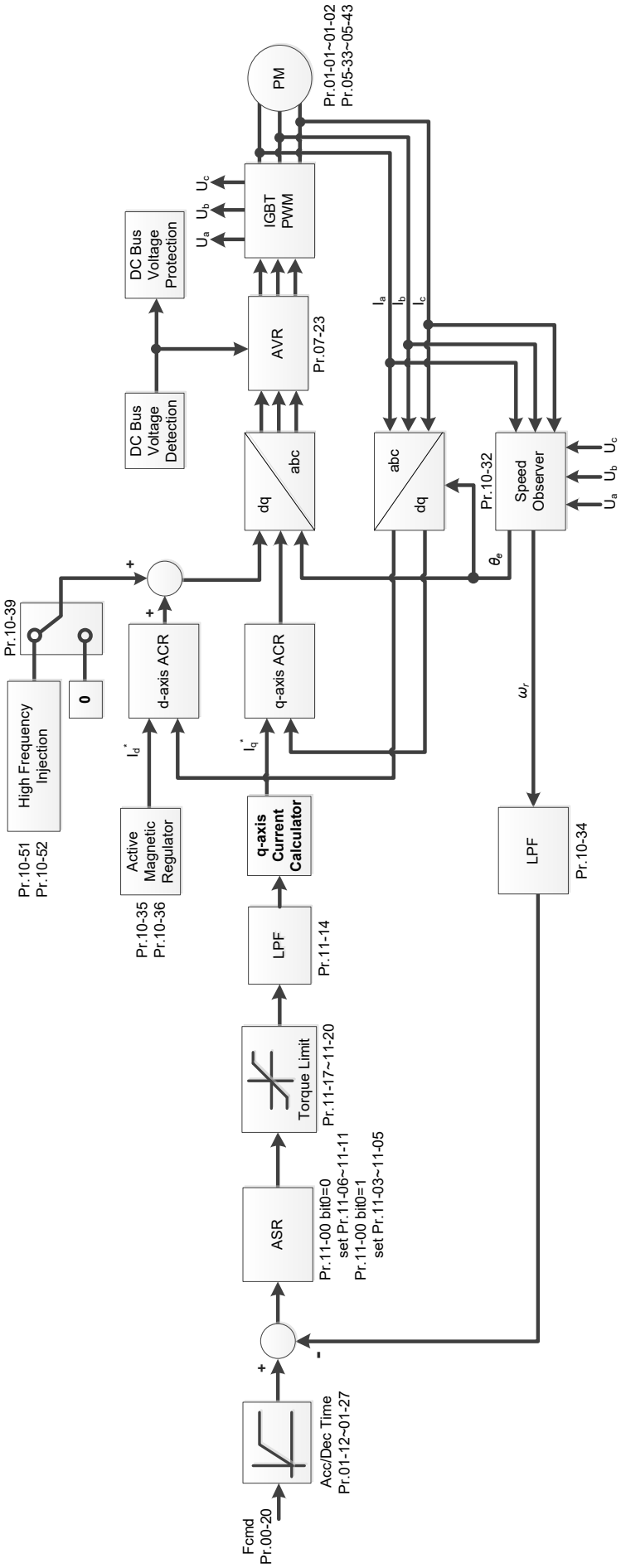

When Pr.00-10 = 0, and you set Pr.00-11 to 8, SynRM sensorless control diagram is as follows:

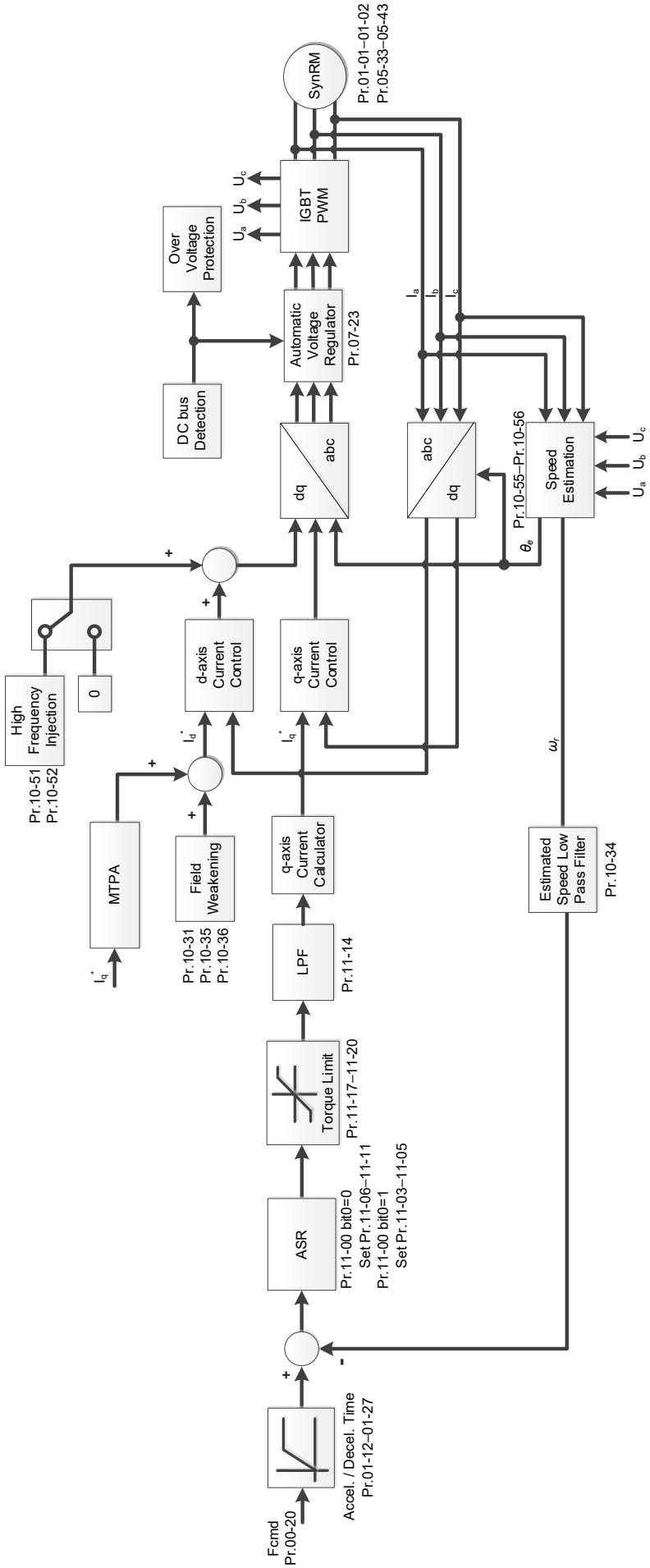

00-12 Point-to-point Position Mode

Default: 0

Settings 0: Increment point-to-point positioning
1: Absolute point-to-point positioning

0: Increment point-to-point positioning = the shifting position from the last positioning command + the shifting position from the positioning command this time.

For example: The first position = 1000 Pulse, the second position = 500 Pulse, the third position = -1000 Pulse, MI1 = 1, MI2 = 2, MI3 = 88

- MI1 = ON, MI2 = OFF: the first position moves 1000 pulses in a forward direction (position = forward 1000 pulses position)
- MI1 =OFF, MI2 = ON: the second position moves 500 pulses in a forward direction (position = forward 1500 pulses position)
- MI1 = ON, MI2 = ON: the third position moves 1000 pulses in a reverse direction (position = forward 500 pulses position)

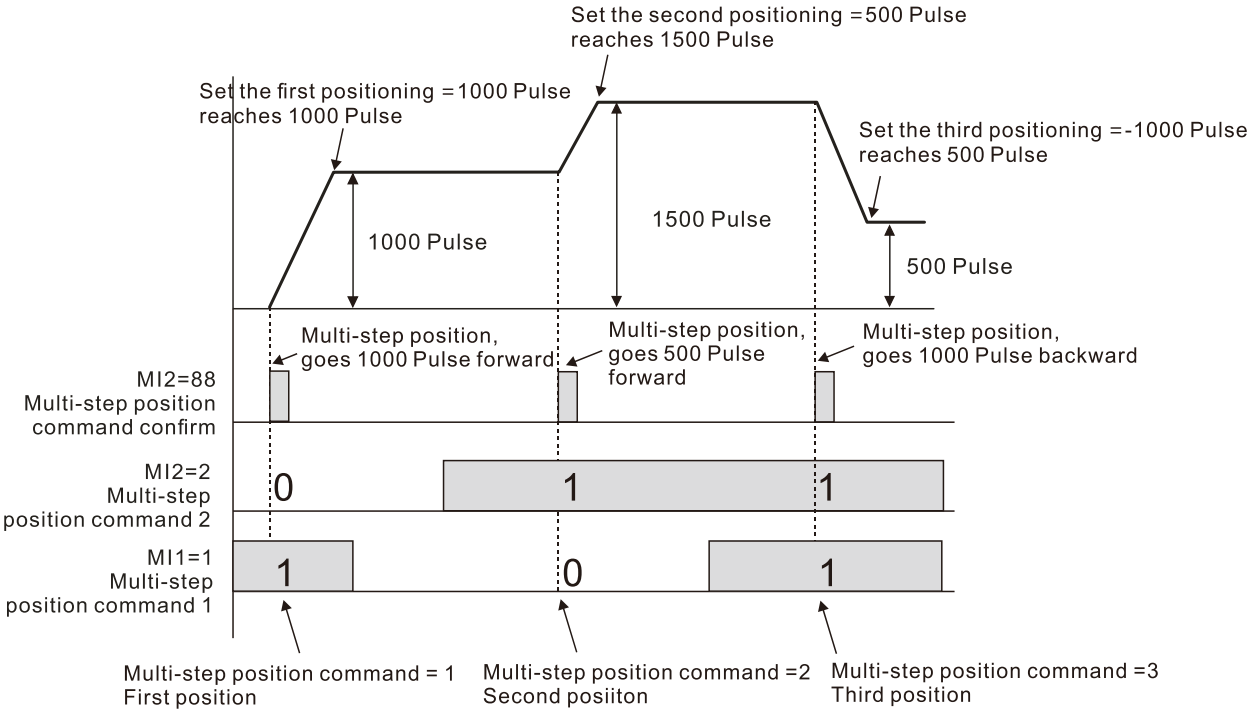

1: Absolute point-to-point positioning = the shifting position from multi-step positioning command

For example: The first position = 1000 pulses, the second position = 500 pulses, the third position = -1000 pulses, MI1 = 1, MI2 = 2, MI3 = 88

- MI1 = ON, MI2 = OFF: the first position moves 1000 pulses in a forward direction (position = forward 1000 pulses position)
- MI1 = OFF, MI2 = ON: the second position moves 500 pulses in a forward direction (position = forward 1500 pulses position)
- MI1 = ON, MI2 = ON: the third position moves 1000 pulses in a reverse direction (position = forward 500 pulses position)

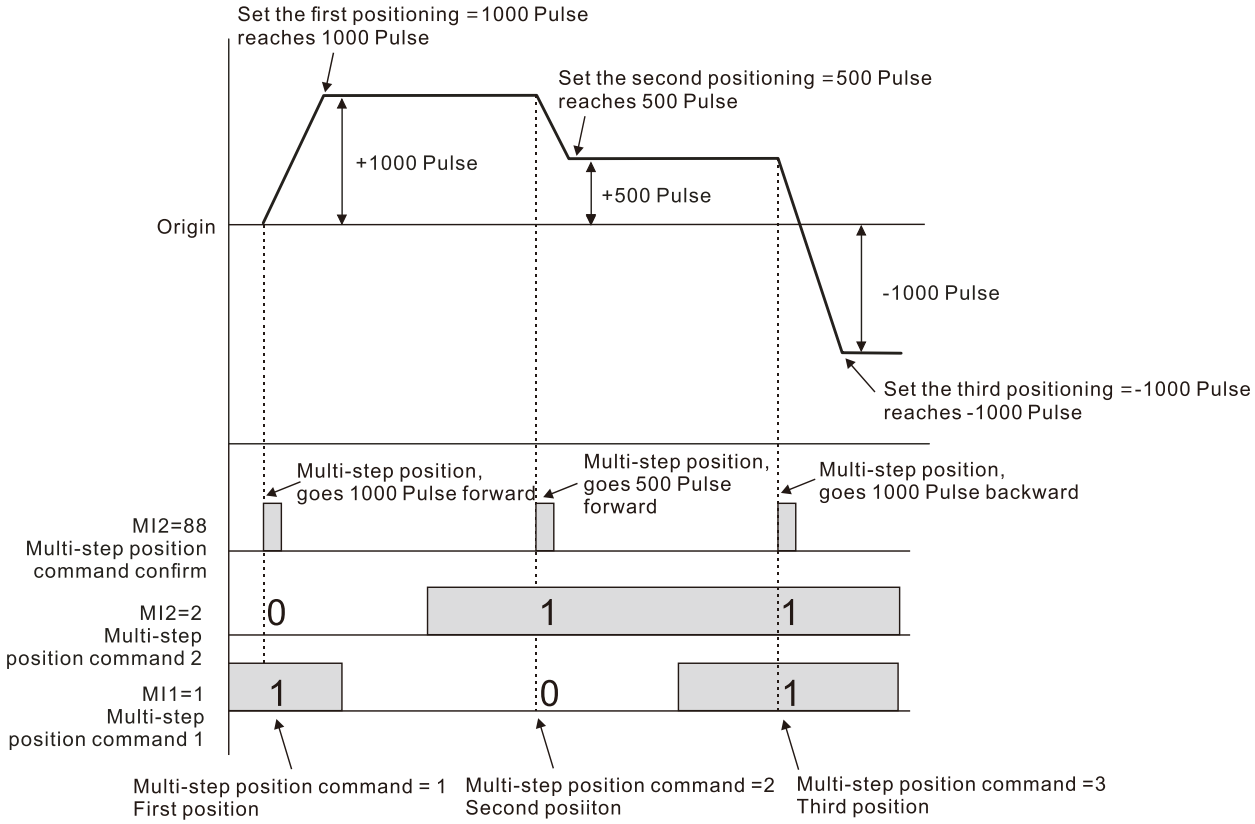

00-13 Control of Torque Mode

Default: 0

Settings 0: IM TQCPG (IM Torque control + Encoder)

1: PM TQCPG (PM Torque control + Encoder)

2: IM TQC Sensorless (IM Sensorless torque control)

4: SynRM TQC Sensorless (SynRM Sensorless torque control)

📖 See the following pages for more information.

Pr.00-13 = 0, IM TQCPG control diagram is as follows:

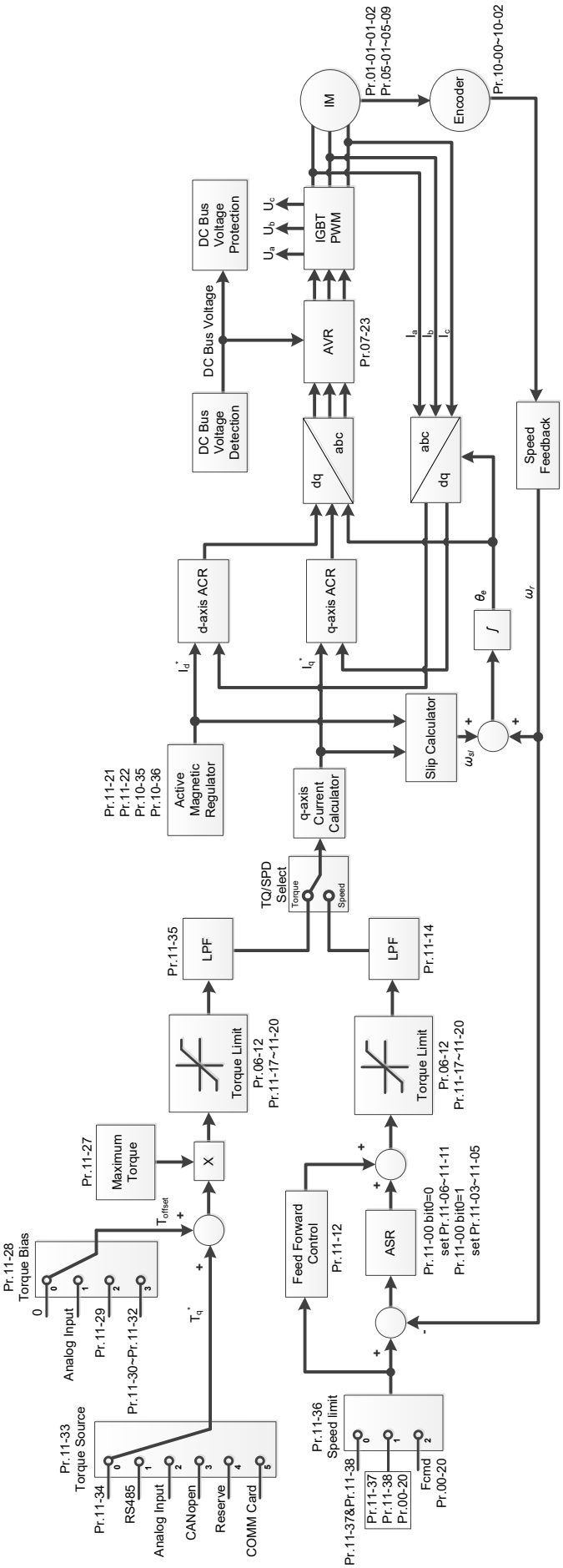

📖 Pr.00-13 = 1, PM TQCPG control diagram is as follows:

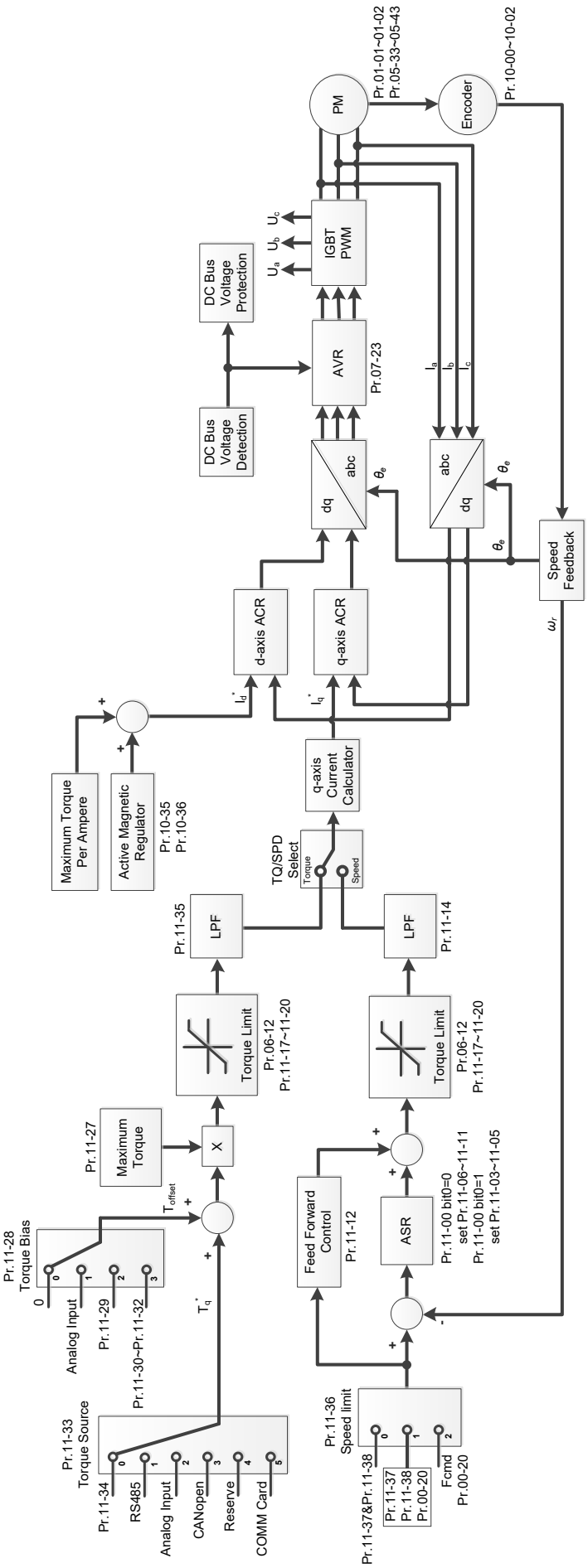

Pr.00-13 = 2, IM TQC Sensorless control diagram is as follows:

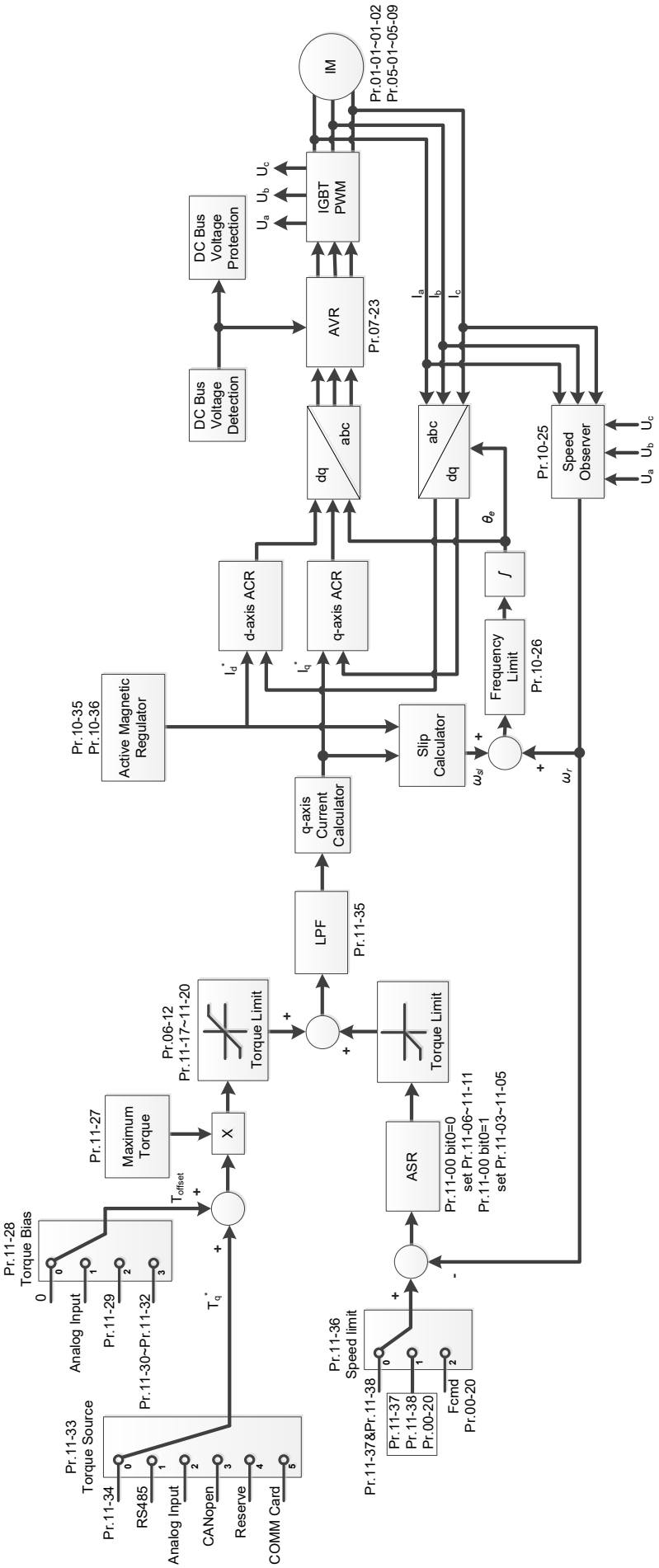

Pr.00-13 = 4, SynRM TQC Sensorless control diagram is as follows; refer to Section 12-2 for SynRM auto-tuning procedure, follow those steps to adjust speed control mode, and then set Pr.00-13 = 4 to be sensorless torque control.

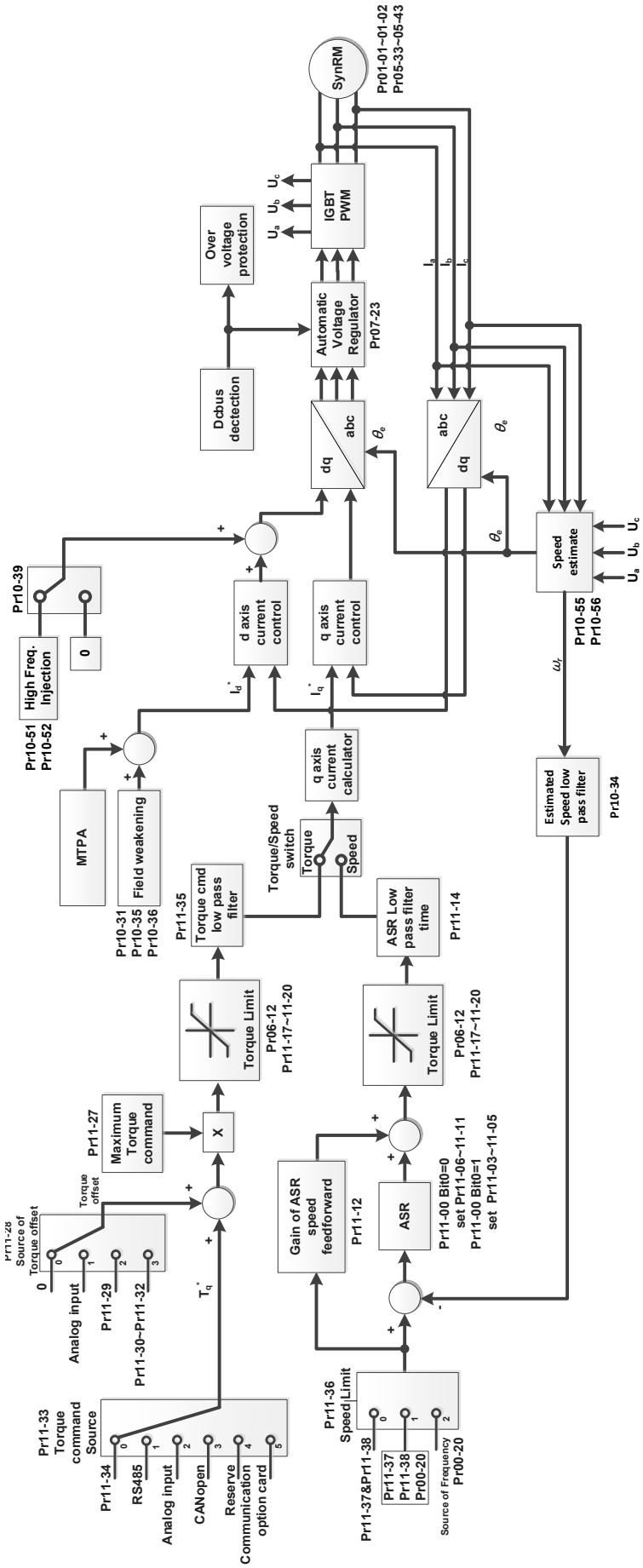

00-16 Load Selection

Default: 3

Settings 3: Super heavy duty

Super heavy duty: over-load ability is 200% rated output current in 3 seconds every 30 seconds. (150% rated output current in 1 minute every 5 minutes). Refer to Pr.00-17 for the setting of carrier frequency. Refer to Chapter 9 Specifications or Pr.00-01 for the rated current.

00-17 Carrier Frequency

Default: Table below

Settings 2–15 kHz

This parameter determines the PWM carrier frequency for the AC motor drive.

	230V Models [Super Heavy Duty]							
Models / Control Mode	Default	VF, SVC	VFPG	IMFOCPG, IMTQCPG	PMFOCPG, PMTQCPG	PMFOC, IPMFOC	IMFOC, IMTQC	SRM FOC*
		Settings	Settings	Settings	Settings	Settings	Settings	Settings
1–15 HP (0.75–11 kW)	8 kHz	2–15 kHz	2–10 kHz	2–8 kHz	4–8 kHz	4–10 kHz	4–12 kHz	4–8 kHz
20–100 HP (15–75 kW)	6 kHz	2–15 kHz	2–10 kHz	2–8 kHz	4–8 kHz	4–10 kHz	4–12 kHz	4–8 kHz
	460V Models [Super Heavy Duty]							
1–20 HP (0.75–15 kW)	8 kHz	2–15 kHz	2–10 kHz	2–8 kHz	4–8 kHz	4–10 kHz	4–12 kHz	4–8 kHz
25–100 HP (18.5–75 kW)	6 kHz	2–15 kHz	2–10 kHz	2–8 kHz	4–8 kHz	4–10 kHz	4–12 kHz	4–8 kHz
125–600 HP (90–450 kW)	4 kHz	2–10 kHz	2–10 kHz	2–8 kHz	4–8 kHz	4–10 kHz	4–10 kHz	4–8 kHz

NOTE：In SRMFOC mode, the carrier frequency default is 4 kHz.

Carrier Frequency	Acoustic Noise	Electromagnetic Noise or Leakage Current	Heat Dissipation	Current Wave
2 kHz	Significant	Minimal	Minimal	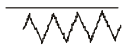
8 kHz	↕	↕	↕	↕
15 kHz	Minimal	Significant	Significant	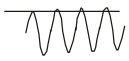

From the table, you see that the PWM carrier frequency has significant influences on the electromagnetic noise, the AC motor drive heat dissipation, and the motor acoustic noise. Therefore, if the surrounding noise is greater than the motor noise, lower the carrier frequency is good to reduce the temperature rise. Although it is quiet operation in the higher carrier frequency, the entire wiring and interference resistance should be considerate.

When Pr.00-11 = 8 (SynRM sensorless control), the maximum carrier frequency is 8 kHz.

When the carrier frequency is higher than the factory setting, it needs to protect by decreasing the carrier frequency. See Pr.06-55 for the related setting and details.

00-19 PLC Command Mask

Default: Read only

Settings bit0: Control command is forced by PLC control
bit1: Frequency command is forced by PLC control
bit2: Position command is forced by PLC control
bit3: Torque command is forced by PLC control

Determines if the frequency command, control command or torque command is locked by PLC.

00-20 Master Frequency Command Source (AUTO) / Source Selection of the PID Target

Default: 0

Settings 0: Digital keypad
1: RS-485 communication input
2: External analog input (Refer to Pr.03-00–Pr.03-02)
3: External UP / DOWN terminal (multi-function input terminals)
4: Pulse input without direction command (Refer to Pr.10-16 without considering direction), use with PG card
5: Pulse input with direction command (Refer to Pr.10-16), use with PG card
6: CANopen communication card
8: Communication card (does not include CANopen card)
9: PID controller

Determines the master frequency source in the AUTO mode.

Pr.00-20 and Pr.00-21 are for the settings of frequency source and operation source in AUTO mode. Pr.00-30 and Pr.00-31 are for the settings of frequency source and operation source in HAND mode. You can switch the AUTO / HAND mode with the keypad KPC-CC01 (optional) or the multi-function input terminal (MI) to set the master frequency source.

The default for the frequency source or operation source is for AUTO mode. It returns to AUTO mode whenever cycle the power. If you use a multi-function input terminal to switch between AUTO and HAND mode, the highest priority is the multi-function input terminal. When the external terminal is OFF, the drive does not accept any operation signal and cannot execute JOG.

The pulse of Pr.00-20 = 4 (Pulse input without direction command) is input by PG or MI8.

00-21 Operation Command Source (AUTO)

Default: 0

Settings 0: Digital keypad
1: External terminals
2: RS-485 communication input
3: CANopen communication card
5: Communication card (does not include CANopen card)

Determines the operation frequency source in the AUTO mode.

When you control the operation command by the keypad KPC-CC01, keys RUN, STOP and JOG (F1) are valid.

00-22 Stop Method

Default: 0

Settings 0: Ramp to stop
1: Coast to stop

Determines how the motor is stopped when the motor receives the STOP command.

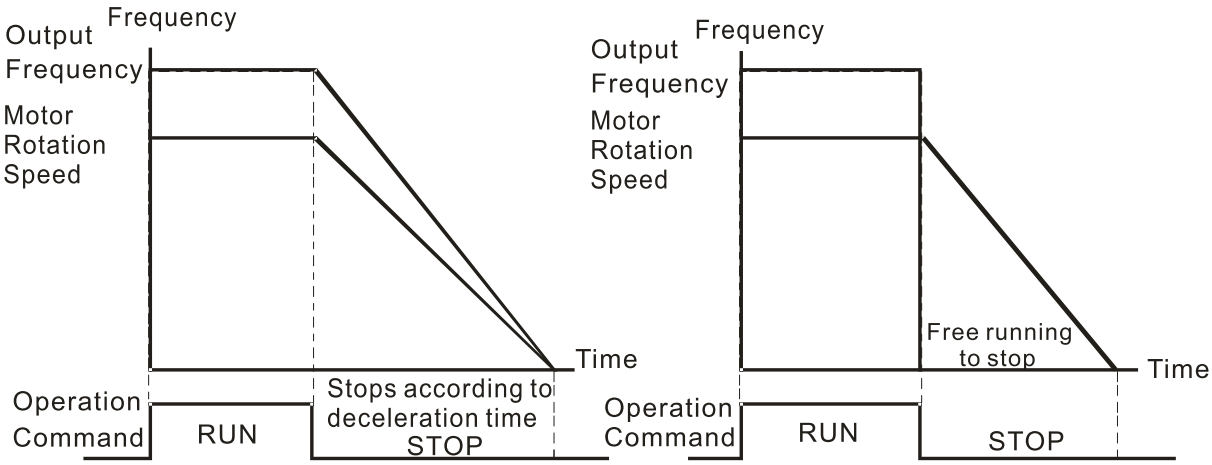

Ramp to Stop and Coast to Stop

1. **Ramp to stop:** the AC motor drive decelerates to 0 or the minimum output frequency (Pr.01-07) according to the set deceleration time, and then to stop.
2. **Coast to stop:** the AC motor drive stops output immediately, and the motor coasts to stop according to the load inertia.
   - Use “ramp to stop” for the safety of personnel, or to prevent material from being wasted in applications where the motor must stop immediately after the drive stops. You must set the deceleration time accordingly.
   - If idling is allowed, or the load inertia is large, use “coast to stop”. For example, blowers, punching machines and pumps

00-23 Motor Direction Control

Default: 0

Settings 0: Enable forward / reverse
1: Disable reverse
2: Disable forward

Enable the motor to run in the forward and reverse direction. You can use it to prevent a motor from running in a direction that would cause injury or damage to the equipment, especially when only one running direction is allowed for the motor load.

00-24 Digital Operator (Keypad) Frequency Command Memory

Default: Read only

Settings Read only

If the keypad is the frequency command source, when Lv or Fault occurs, the parameter stores the current frequency command.

00-25 User-Defined Characteristics

Default: 0

Settings bit0–3: user-defined decimal places

0000b: no decimal place

0001b: one decimal place

0010b: two decimal places

0011b: three decimal places

bit 4–15: user-defined unit

000xh: Hz

001xh: rpm

002xh: %

003xh: kg

004xh: m/s

005xh: kW

006xh: HP

007xh: ppm

008xh: 1/m

009xh: kg/s

00Axh: kg/m

00Bxh: kg/h

00Cxh: lb/s

00Dxh: lb/m

00Exh: lb/h

00Fxh: ft/s

010xh: ft/m

011xh: m

012xh: ft

013xh: degC

014xh: degF

015xh: mbar

016xh: bar

017xh: Pa

018xh: kPa

019xh: mWG

01Axh: inWG

01Bxh: ftWG

01Cxh: psi

01Dxh: atm

01Exh: L/s

01Fxh: L/m

020xh: L/h

021xh: m3/s

022xh: m3/h
023xh: GPM
024xh: CFM
xxxxh: Hz

bit 0–3:
The displayed units for the control frequency F page and user-defined (Pr.00-04 = d10, PID feedback) and the displayed number of decimal places for Pr.00-26 (supports up to three decimal places).

bit 4–15:
The displayed units for the control frequency F page, user-defined (Pr.00-04 = d10, PID feedback) and Pr.00-26.

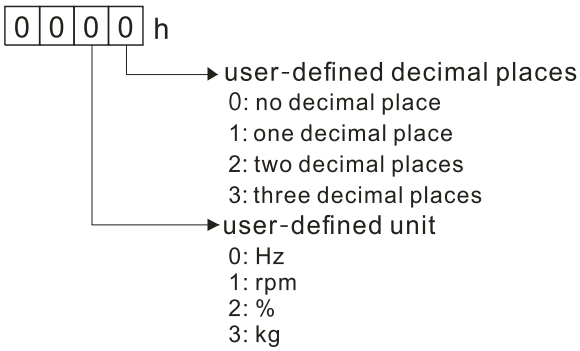

00-26 Maximum User-Defined Value

Default: 0

Settings 0: Disable
0–65535 (when Pr.00-25 is set to no decimal place)
0.0–6553.5 (when Pr.00-25 is set to 1 decimal place)
0.00–655.35 (when Pr.00-25 is set to 2 decimal places)
0.000–65.535 (when Pr.00-25 is set to 3 decimal places)

When Pr.00-26 is NOT set to 0, the user-defined value is enabled. After selecting the displayed unit and number of decimal places with Pr.00-25, the setting value of Pr.00-26 corresponds to Pr.01-00 (drive's maximum operating frequency), and then the motor operation frequency has a linear relationship with the displayed value on the digital keypad.

Example:
When the frequency set in Pr.01-00 = 60.00 Hz, the maximum user-defined value for Pr.00-26 is 100.0%. This also means Pr.00-25 is set at 0021h to select % as the unit.

NOTE: Set Pr.00-25 before using Pr.00-26. After you finish setting, when Pr.00-26 is not 0, the displayed unit on the keypad shows correctly according to Pr.00-25 settings.

00-27 User-Defined Value

Default: Read only

Settings Read only

Pr.00-27 displays the user-defined value when Pr.00-26 is not set to 0.

The user-defined function is valid only when Pr.00-20 (frequency source) is set to digital keypad or RS-485 communication.

00-29 LOCAL / REMOTE Selection

Default: 0

Settings
0: Standard HOA function
1: When switching between local and remote, the drive stops
2: When switching between local and remote, the drive runs with REMOTE settings for frequency and operation status
3: When switching between local and remote, the drive runs with LOCAL settings for frequency and operation status
4: When switching between local and remote, the drive runs with LOCAL setting when switched to Local and runs with REMOTE settings when switched to Remote for frequency and operation status.

- The default of Pr.00-29 is 0, that is, the standard (Hand-Off-Auto) function. Set the AUTO frequency and operation source with Pr.00-20 and Pr.00-21. Set the HAND frequency and operation source with Pr.00-30 and Pr.00-31. Select or switch AUTO / HAND mode by using the digital keypad (KPC-CC01) or setting the multi-function input terminal MIx = 41, 42.
- When you set the external terminal (MI) to 41 and 42 (AUTO / HAND mode), Pr.00-29 = 1,2,3,4 are disabled. The external terminal has the highest command priority, and Pr.00-29 functions in standard HOA mode.
- If Pr.00-29 is not set to 0, the Local / Remote function is enabled, and the top right corner of digital keypad KPC-CC01 (optional) displays LOC or REM (the display is available when KPC-CC01 is installed with firmware version higher than version 1.021). Set the LOCAL frequency and operation source with Pr.00-20 and Pr.00-21. Set the REMOTE frequency and operation source with Pr.00-30 and Pr.00-31. Select or switch LOC / REM mode with the digital keypad KPC-CC01 (optional) or set the multi-function input terminal MIx = 56. The AUTO key of the digital keypad is for the REMOTE function, and HAND key is for the LOCAL function.
- When you set the external terminal (MI) to 56 for LOC / REM mode selection, if you set Pr.00-29 to 0, then the external terminal function is disabled.
- When you set the external terminal (MI) to 56 for LOC / REM mode selection, if Pr.00-29 is not set to 0, then AUTO / HAND keys are disabled. In this case, the external terminal has the highest command priority.
- The comparison between the setting of each mode and the PLC address:

PLC Address / Mode	HOA Mode		LOC / REM Mode		HOA Mode
	HAND-ON	AUTO-ON	LOC-ON	REM-ON	OFF
M1090 =	0	0	0	0	1
M1091 =	1	0	0	0	0
M1092 =	0	1	0	0	0
M1100 =	0	0	1	0	0
M1101 =	0	0	0	1	0

00-30 Master Frequency Command Source (HAND)

Default: 0

Settings
0: Digital keypad
1: RS-485 communication input
2: External analog input (refer to Pr.03-00–Pr.03-02)
3: External UP/DOWN terminal (multi-function input terminals)
4: Pulse input without direction command
(refer to Pr.10-16 without considering direction)
5: Pulse input with direction command (refer to Pr.10-16)
6: CANopen communication card
8: Communication card (does not include CANopen card)
9: PID controller

Determines the master frequency source in HAND mode.

00-31 Operation Command Source (HAND)

Default: 0

Settings
0: Digital keypad
1: External terminals
2: RS-485 communication input
3: CANopen communication card
5: Communication card (does not include CANopen card)

Set the source of the master frequency in HAND mode.

Pr.00-20 and Pr.00-21 are for the settings of frequency source and operation source in AUTO mode. Pr.00-30 and Pr.00-31 are for the settings of frequency source and operation source in HAND mode. You can switch the AUTO / HAND mode with the keypad KPC-CC01 (optional) or the multi-function input terminal (MI) to set the master frequency source.

The default for the frequency source or operation source is for AUTO mode. It returns to AUTO mode whenever cycle the power. If you use a multi-function input terminal to switch between AUTO and HAND mode, the highest priority is the multi-function input terminal. When the external terminal is OFF, the drive does not accept any operation signal and cannot execute JOG.

00-32 Digital Keypad STOP Function

Default: 0

Settings
0: STOP key disabled
1: STOP key enabled

Valid when the operation command source is not the digital keypad (Pr.00-21 ≠ 0). When Pr.00-21 = 0, the STOP key on the digital keypad is not affected by the parameter.

00-33 RPWM Mode Selection

Default: 0

Settings 0: Disabled
1: RPWM mode 1
2: RPWM mode 2
3: RPWM mode 3

Different control modes for Pr.00-33:

Motor	Induction Motor (IM)					Permanent Magnet Synchronous Motor (PM)				Synchronous Reluctance Motor (SynRM)
Control Mode	VF	VFPG	SVC	FOC PG	FOC	PM SVC	FOCPG PM	PM FOC	HFI	
0: RPWM mode 1	✓	✓	✓	✓	✓	✓	✓	✓	✓	
1: RPWM mode 2	✓	✓	✓	✓	✓	✓	✓	✓	✓	
2: RPWM mode 3	✓	✓	✓	✓	✓	✓	✓	✓	✓	

When the RPWM function is enabled, the drive randomly distributes the carrier frequency based on actual Pr.00-17 carrier frequency settings.

The RPWM function can be applied to all control modes.

Once the RPWM function is enabled, particularly high frequency audio noise is reduced, and the audio frequency produced by the running motor also changes (usually from a higher to lower).

Three RPWM modes are provided for different applications. Each mode corresponds to different frequency distribution, electromagnetic noise distribution, and audio frequency.

The settings for Pr.00-17 (Carrier Frequency) vary with enabling or disabling RPWM. When the RPWM function is enabled, the default setting value for Pr.00-17 is according to the table below.

Model	Power Range (kW)	Pr.00-17 (Carrier Frequency) Default Setting Value
220V	0.75–7.5	7 kHz
	11–90	6 kHz
440V	0.75–11	7 kHz
	15–55	6 kHz
	75–560	5 kHz

00-34 RPWM Range

Default: 0.0

Settings 0.0–4.0 kHz
Pr.00-17 = 4 kHz, 8 kHz: 0.0–2.0 kHz
Pr.00-17 = 5 kHz, 6 kHz, 7 kHz: 0.0–4.0 kHz

When the RPWM function is enabled, the minimum carrier frequency setting for Pr.00-17 is 3 kHz, and the maximum is 9 kHz.

Pr.00-34 is valid only when the RPWM function is enabled (Pr.00-33 ≠ 0).

When the RPWM function is enabled and Pr.00-17 is set to 4 or 8 kHz, the setting range for Pr.00-34 is 0.0–2.0 kHz (±1 kHz).

Example:
When Pr.00-17 = 4 kHz, Pr.00-33 is enabled (= 1, 2, or 3), Pr.00-34 = 2.0 kHz, then the carrier

frequency outputs on the basis of 4 kHz, and the random frequency distribution tolerance is ±1 kHz, that is, the carrier frequency randomly fluctuates from 3 kHz to 5 kHz.

When Pr.00-17 = 4 or 8 kHz, the maximum setting for Pr.00-34 is 2.0 kHz (±1 kHz). The carrier frequency fluctuation range is according to the diagram below.

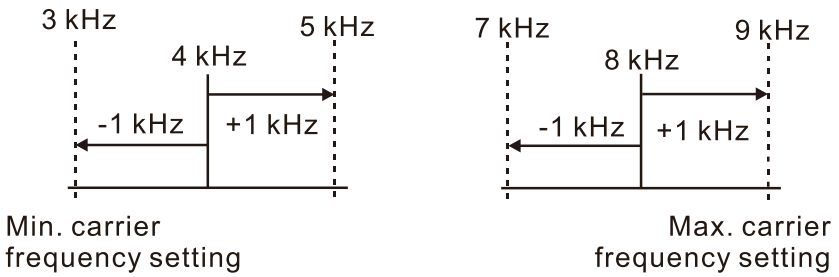

When Pr.00-17 = 5, 6, or 7kHz, the maximum setting for Pr.00-34 is 4.0 kHz (±2 kHz). The carrier frequency fluctuation range is according to the diagram below.

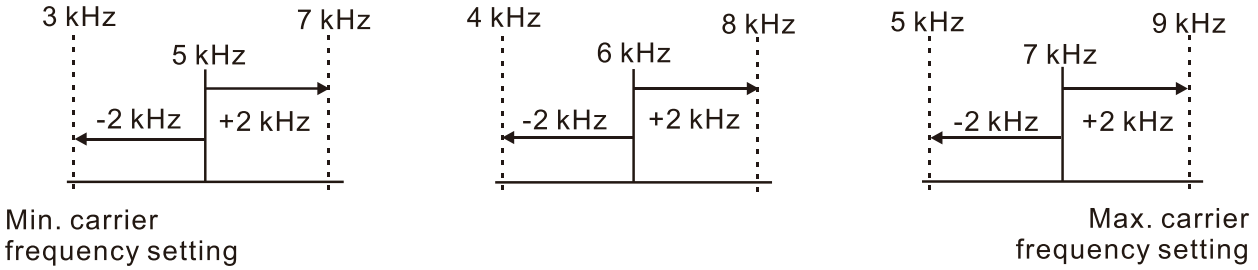

00-35 Auxiliary Frequency Source

Default: 0.0

Settings
0: Disabled
1: Digital keypad
2: RS-485 communication input
3: Analog input
4: External UP / DOWN key
5: Pulse inputs with direction command (refer to Pr.10-16)
6: CANopen communication card
8: Communication card

00-36 Master and Auxiliary Frequency Command Selection

Default: 0.0

Settings
0: Master + auxiliary frequency
1: Master – auxiliary frequency
2: Auxiliary – master frequency

Pr.00-35 (Auxiliary Frequency Source) determines whether to enable the master and auxiliary frequency functions: Pr.00-35 = 0 disables the function, Pr.00-35 ≠ 0 enables the function.

In the master and auxiliary frequency mode (Pr.00-36 = 0, 1 and 2), after the master and auxiliary frequencies are added or subtracted, the speed planning frequency command is obtained through the system acceleration and deceleration (includes S-curve).

Set the master frequency source of the master and auxiliary frequency function by Pr.00-20, set the auxiliary frequency source by Pr.00-35, and set the equation of the master and auxiliary frequency calculation according to Pr.00-36.

- When Pr.00-36 = 0, 1 and 2, after the master and auxiliary frequencies are added or subtracted, the value outputs as a control command through the system acceleration or deceleration (includes S-curve).
- After adding or subtracting the master and auxiliary frequencies, if the calculated value is a negative value, Pr.03-10 determines whether to change the operation direction.
- When the master frequency source (Pr.00-20 = 0) or auxiliary frequency source (Pr.00-35 = 1) is digital keypad, the displayed value on the F page of the digital keypad is the set frequency, which sets the master or auxiliary frequency. If both of the master and auxiliary frequency sources are not digital keypad (Pr.00-20 ≠ 0 and Pr.00-35 ≠ 1), the F page displays the calculated value after adding or subtracting the master and auxiliary frequency.
- When setting the master and auxiliary frequency source, Pr.00-35 cannot be set to the same value as Pr.00-20 or Pr.00-30.

00-37 Over-modulation Gain

Default: 100

Settings 80–120

- When the motor operates in the flux-weakening region or voltage saturation region it can be that a higher voltage output is required. Increase Pr.00-37 to increase the output RMS voltage. Increasing the over-modulation gain reduces the output current and enhances the motor efficiency. However, note that low-frequency harmonics created by the six-step square-wave modulation may occur if the gain is too large.
- How to use Pr.00-37:
  Gradually increase Pr.00-37 setting value to check if the output current reduces and the operation performance improves for an optimal over-modulation gain value.

00-48 Display Filter Time (Current)

Default: 0.100

Settings 0.001–65.535 sec.

- Minimize the current fluctuation displayed by the digital keypad.

00-49 Display Filter Time (Keypad)

Default: 0.100

Settings 0.001–65.535 sec.

- Minimize the display value fluctuation displayed by the digital keypad.

00-50 Software Version (Date)

Default: Read only

Settings Read only

- Displays the current drive software version by date.

01 Basic Parameters

✓ You can set this parameter during operation.

✓ 01-00 Maximum Operation Frequency of Motor 1

Default: 60.00 / 50.00

Settings 00.00–599.00 Hz

📖 Determines the AC motor drive's maximum operation frequency range. All the AC motor drive frequency command sources (analog inputs 0–10 V, 4–20 mA, 0–20 mA, ±10 V) are scaled to correspond to the output frequency range.

✓ 01-01 Rated / Base Frequency of Motor 1
✓ 01-35 Rated / Base Frequency of Motor 2

Default: 60.00 / 50.00

Settings 0.00–599.00 Hz

📖 Set this parameter according to the motor's rated frequency on the motor nameplate. If the motor's rated frequency is 60 Hz, set this parameter to 60. If the motor's rated frequency is 50 Hz, set this parameter to 50.

✓ 01-02 Rated / Base Output Voltage of Motor 1
✓ 01-36 Rated / Base Output Voltage of Motor 2

Default: 200.0 / 400.0

Settings 230V models: 0.0–255.0 V
460V models: 0.0–510.0 V

📖 Set this parameter according to the rated voltage on the motor nameplate. If the motor's rated voltage is 220 V, set this parameter to 220.0. If the motor's rated voltage is 200 V, set this parameter to 200.0.

📖 There are many motor types in the market and the power system for each country is different. The economical and convenient solution is to install an AC motor drive. Then there is no problem using the motor with different voltage and frequency inputs, and the motor drive can improve the original motor characteristics and useful life.

01-03 Mid-point Frequency 1 of Motor 1

Default: 3.00

Settings 0.00–599.00 Hz

✓ 01-04 Mid-point Voltage 1 of Motor 1

Default: 11.0 / 22.0

Settings 230V models: 0.0–240.0 V
460V models: 0.0–480.0 V

01-37 Mid-point Frequency 1 of Motor 2

Default: 3.00

Settings 0.00–599.00 Hz

01-38 Mid-point Voltage 1 of Motor 2

Default: 11.0 / 22.0

Settings 230V models: 0.0–240.0 V
460V models: 0.0–480.0 V

01-05 Mid-point Frequency 2 of Motor 1

Default: 1.50

Settings 0.00–599.00 Hz

01-06 Mid-point Voltage 2 of Motor 1

Default: 5.0 / 10.0

Settings 230V models: 0.0–240.0 V
460V models: 0.0–480.0 V

01-39 Mid-point Frequency 2 of Motor 2

Default: 1.50

Settings 0.00–599.00 Hz

01-40 Mid-point Voltage 2 of Motor 2

Default: 5.0 / 10.0

Settings 230V models: 0.0–240.0 V
460V models: 0.0–480.0 V

01-07 Minimum Output Frequency of Motor 1

Default: 0.50

Settings 0.00–599.00 Hz

01-08 Minimum Output Voltage of Motor 1

Default: 1.0 / 2.0

Settings 230V models: 0.0–240.0 V
460V models: 0.0–480.0 V

01-41 Minimum Output Frequency of Motor 2

Default: 0.50

Settings 0.00–599.00 Hz

01-42 Minimum Output Voltage of Motor 2

Default: 1.0 / 2.0

Settings 230V models: 0.0–240.0 V
460V models: 0.0–480.0 V

- You usually set the V/F curve according to the motor's allowable loading characteristics. Pay special attention to the motor's heat dissipation, dynamic balance, and bearing lubrication when the loading characteristics exceed the loading limit of the motor.
- There is no limit for the voltage setting, but a high voltage at a low frequency may cause motor damage, overheating, and trigger the stall prevention or the over-current protection; therefore, use low voltage at low frequency to prevent motor damage or drive error.
- Pr.01-35 to Pr.01-42 is the V/F curve for motor 2. When setting the multi-function input terminals [Pr.02-01–02-08 and Pr.02-26–Pr.02-31 (extension card)] to 14, the AC motor drive acts with the second V/F curve.

The diagram below shows the V/F curve for motor 1. You can use the same V/F curve for motor 2.

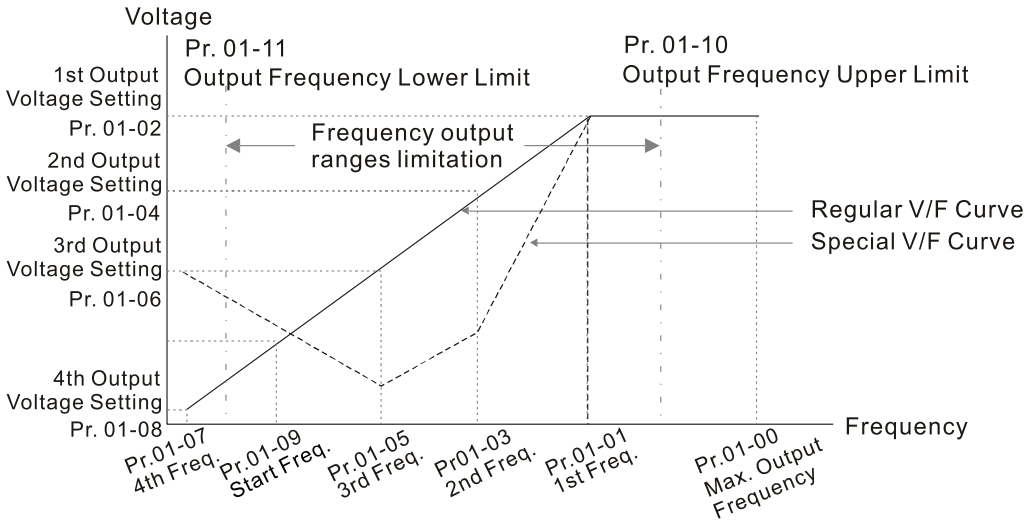

V/F Curve and The Related Parameters

Common settings for the V/F curve:

(1) General purpose

Motor spec. 60Hz

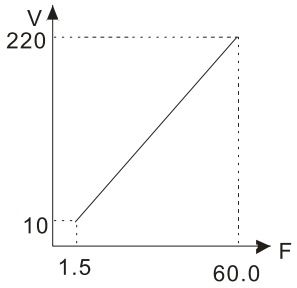

Pr.	Setting
01-00	60.0
01-01	60.0
01-02	220.0
01-03 01-05	1.50
01-04 01-06	10.0
01-07	1.50
01-08	10.0

Motor spec. 50Hz

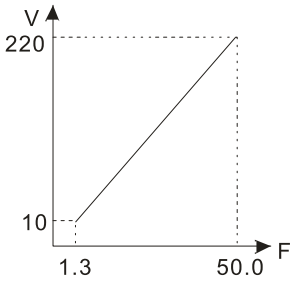

Pr.	Setting
01-00	50.0
01-01	50.0
01-02	220.0
01-03 01-05	1.30
01-04 01-06	10.0
01-07	1.30
01-08	10.0

(2) For fan and hydraulic machinery

Motor spec. 60Hz

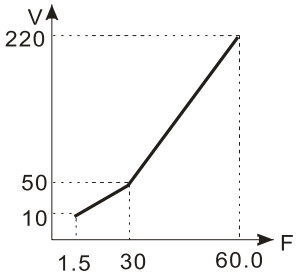

Pr.	Setting
01-00	60.0
01-01	60.0
01-02	220.0
01-03 01-05	30.0
01-04 01-06	50.0
01-07	1.50
01-08	10.0

Motor spec. 50Hz

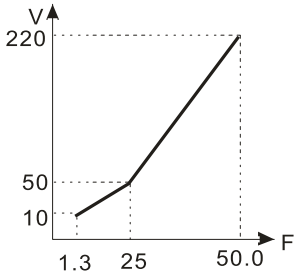

Pr.	Setting
01-00	50.0
01-01	50.0
01-02	220.0
01-03 01-05	25.0
01-04 01-06	50.0
01-07	1.30
01-08	10.0

(3) High starting torque

Motor spec. 60Hz

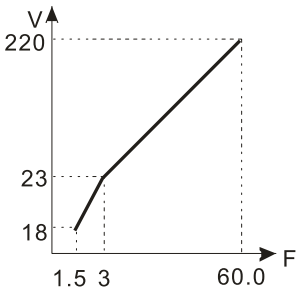

Pr.	Setting
01-00	60.0
01-01	60.0
01-02	220.0
01-03 01-05	3.00
01-04 01-06	23.0
01-07	1.50
01-08	18.0

Motor spec. 50Hz

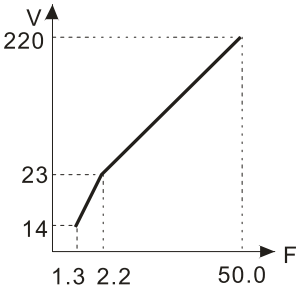

Pr.	Setting
01-00	50.0
01-01	50.0
01-02	220.0
01-03 01-05	2.20
01-04 01-06	23.0
01-07	1.30
01-08	14.0

01-09 Start-Up Frequency

Default: 0.50

Settings 0.00–599.00 Hz

When the starting frequency is larger than the minimum output frequency, the drive's frequency output starts when the starting frequency reaches the F command. Refer to the following diagram for details.

Fcmd: frequency command

Fstart: start-up frequency (Pr.01-09)

fstart: actual start-up frequency of the drive

Fmin: 4th output frequency setting (Pr.01-07 / Pr.01-41)

Flow: output frequency lower limit (Pr.01-11)

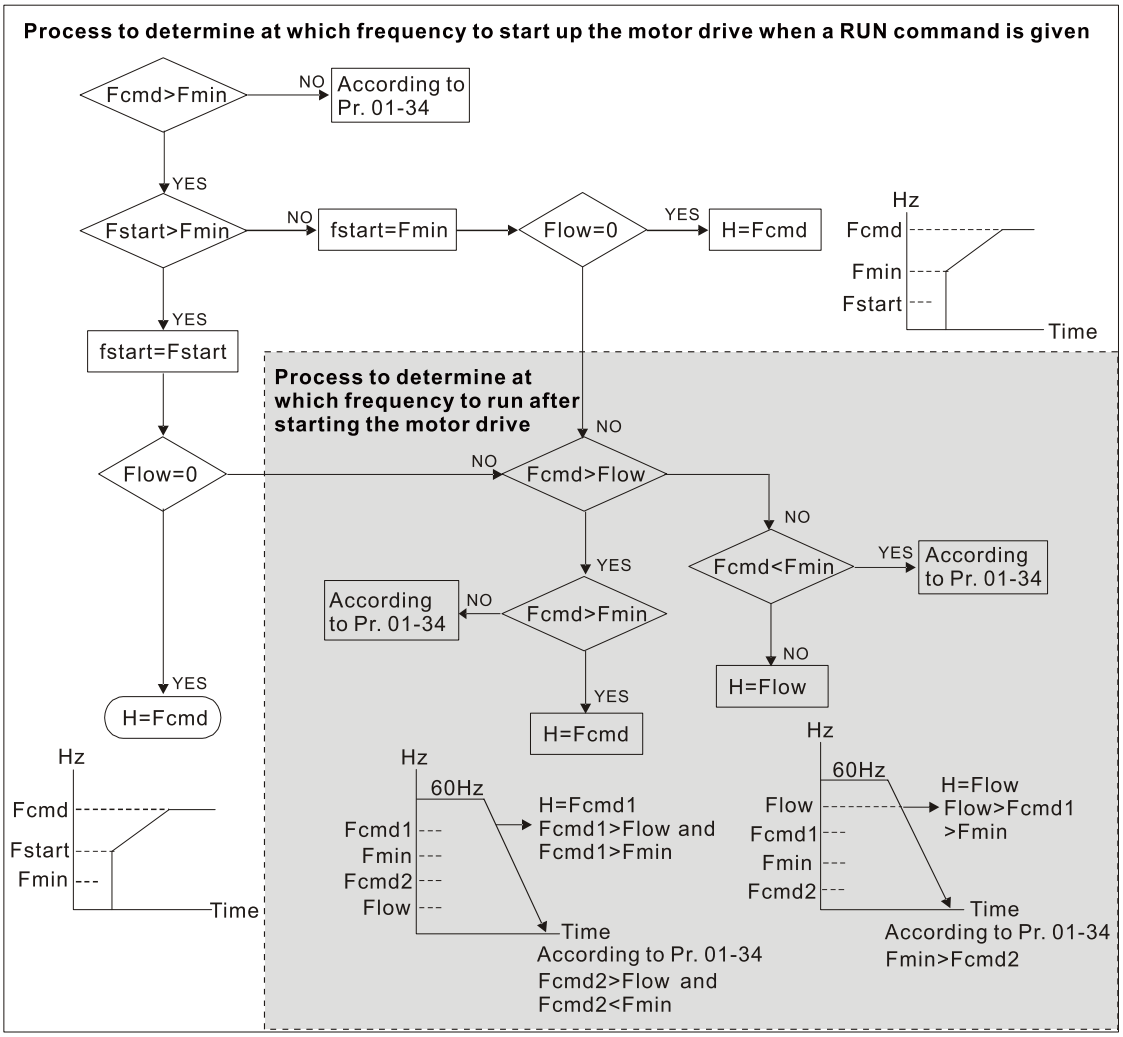

When Fcmd > Fmin and Fcmd < Fstart:

If Flow < Fcmd, the drive runs directly by Fcmd.

If Flow ≥ Fcmd, the drive runs with Fcmd, and then rises to Flow according to acceleration time.

The drive's output frequency goes directly to 0 when decelerating to Fmin.

01-10 Output Frequency Upper Limit

Default: 599.00

Settings 0.00–599.00 Hz

01-11 Output Frequency Lower Limit

Default: 0.00

Settings 0.00–599.00 Hz

- If the output frequency setting is higher than the upper limit (Pr.01-10), the drive runs with the upper limit frequency. If the output frequency setting is lower than the lower limit (Pr.01-11) but higher than the minimum output frequency (Pr.01-07), the drive runs with the lower limit frequency. Set the upper limit frequency > the lower limit frequency (Pr.01-10 setting value must be > Pr.01-11 setting value).
- If the slip compensation function (Pr.07-27) is enabled for the drive, the drive's output frequency may exceed the Frequency command.

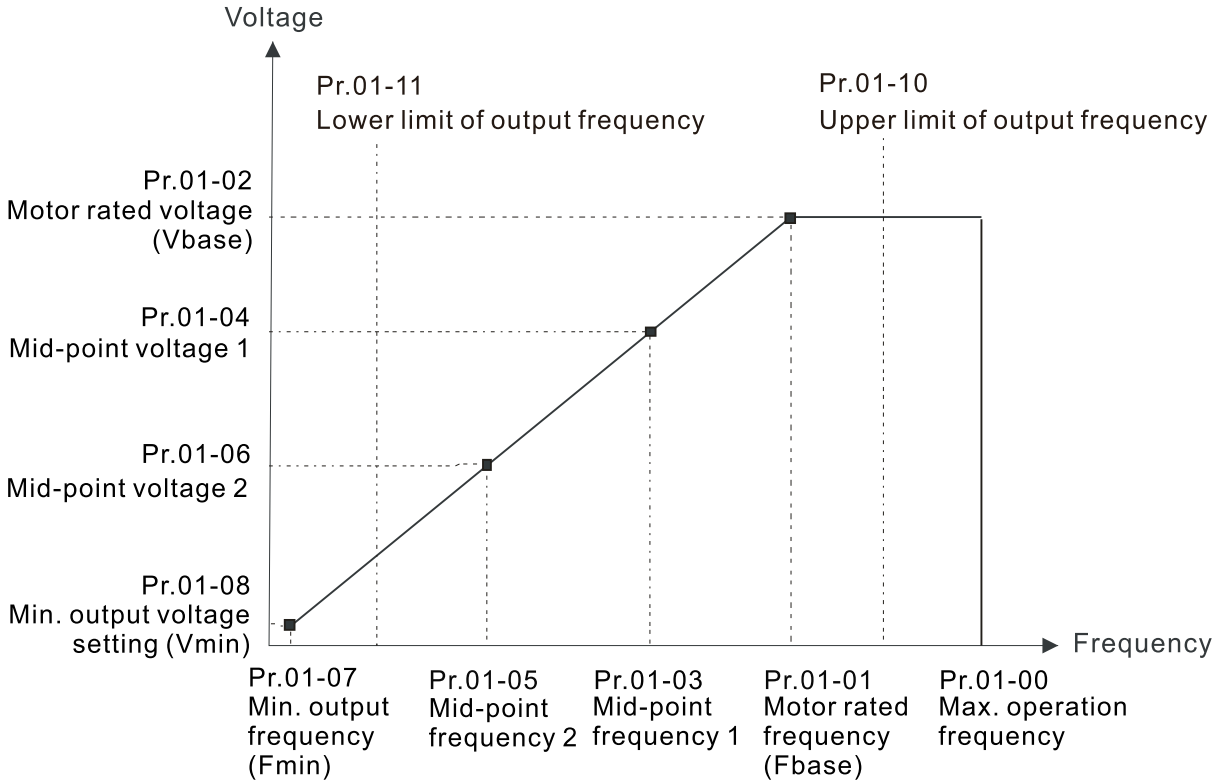

- When the drive starts, it operates according to the V/F curve and accelerates from the minimum output frequency (Pr.01-07) to the setting frequency. It is not limited by the lower output frequency settings.
- Use the frequency upper and lower limit settings to prevent operator misuse, overheating caused by the motor's operating at a too low frequency, or mechanical wear due to a too high operation frequency.
- If the frequency upper limit setting is 50 Hz and the frequency setting is 60 Hz, the maximum operation frequency is 50 Hz.
- If the frequency lower limit setting is 10 Hz and the minimum operation frequency setting (Pr.01-07) is 1.5 Hz, then the drive operates at 10 Hz when the Frequency command is higher than Pr.01-07 but lower than 10 Hz. If the Frequency command is lower than Pr.01-07, the drive is in ready status without output.

✓	**01-12**	Acceleration Time 1
✓	**01-13**	Deceleration Time 1
✓	**01-14**	Acceleration Time 2
✓	**01-15**	Deceleration Time 2
✓	**01-16**	Acceleration Time 3
✓	**01-17**	Deceleration Time 3
✓	**01-18**	Acceleration Time 4
✓	**01-19**	Deceleration Time 4
✓	**01-20**	JOG Acceleration Time
✓	**01-21**	JOG Deceleration Time

Default: 10.00
The default of motor drive with 30HP and above: 60.00 / 60.0

Settings Pr.01-45 = 0: 0.00–600.00 seconds
Pr.01-45 = 1: 0.00–6000.0 seconds

- The acceleration time determines the time required for the AC motor drive to ramp from 0.00 Hz to the maximum operation frequency (Pr.01-00). The deceleration time determines the time required for the AC motor drive to decelerate from the maximum operation frequency (Pr.01-00) down to 0.00 Hz.
- The acceleration and deceleration time are invalid when using Pr.01-44 Auto-acceleration and Auto-deceleration Setting.
- Select the Acceleration / Deceleration time 1, 2, 3, 4 with the multi-function input terminals settings. The defaults are Acceleration Time 1 and Deceleration Time 1.
- With the enabled torque limits and stall prevention functions, the actual acceleration and deceleration time are longer than the above action time.
- Note that setting the acceleration and deceleration time too short may trigger the drive's protection function (Pr.06-03 Over-current Stall Prevention during Acceleration or Pr.06-01 Over-voltage Stall Prevention), and the actual acceleration and deceleration time are longer than this setting.
- Note that setting the acceleration time too short may cause motor damage or trigger drive protection due to over-current during the drive's acceleration.
- Note that setting the deceleration time too short may cause motor damage or trigger drive protection due to over-current during the drive's deceleration or over-voltage.
- Use suitable brake resistor (refer to Chapter 07 Optional Accessories) to decelerate in a short time and prevent over-voltage.
- When you enable Pr.01-24–Pr.01-27 (S-curve acceleration and deceleration begin and arrival time), the actual acceleration and deceleration time are longer than the setting.

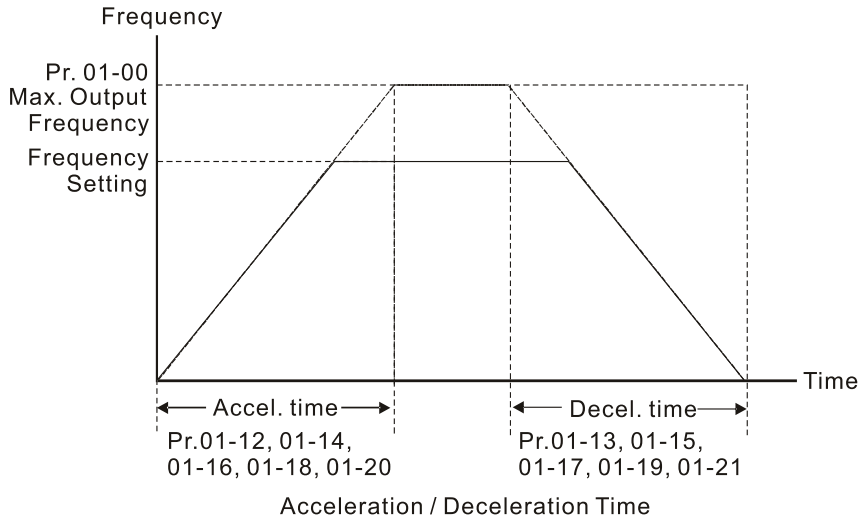

01-22 JOG Frequency

Default: 6.00

Settings 0.00–599.00 Hz

You can use both the external terminal JOG and F1 key on the optional keypad KPC-CC01 to set the JOG function. When the JOG command is ON, the AC motor drive accelerates from 0 Hz to the JOG frequency (Pr.01-22). When the JOG command is OFF, the AC motor drive decelerates from the JOG frequency to stop. The JOG acceleration and deceleration time (Pr.01-20, Pr.01-21) are the time to accelerate from 0.00 Hz to JOG frequency (Pr.01-22). You cannot execute the JOG command when the AC motor drive is running. When the JOG command is executing, other operation commands are invalid.

01-23 Switch Frequency between First and Fourth Accel. / Decel.

Default: 0.00

Settings 0.00–599.00 Hz

This function does not require the external terminal switching function; it switches the acceleration and deceleration time automatically according to the Pr.01-23 setting. If you set the external terminal, the external terminal has priority over Pr.01-23.

Use this parameter to set the switch frequency between acceleration and deceleration slope. The First / Fourth Accel. / Decel. slope is calculated by the Max. Operation Frequency (Pr.01-00) ÷ acceleration / deceleration time.

Example: When the Max. Operation Frequency (Pr.01-00) = 80 Hz, and Switch Frequency between First and Fourth Accel. / Decel. (Pr.01-23) = 40 Hz:

a. If Acceleration Time 1 (Pr.01-02) = 10 sec., Acceleration Time 4 (Pr.01-18) = 6 sec., then the acceleration time is 3 sec. for 0–40 Hz and 5 sec. for 40–80 Hz.

b. If Deceleration Time 1 (Pr.01-13) = 8 sec., Deceleration Time 4 (Pr.01-19) = 2 sec., then the deceleration time is 4 sec. for 80–40 Hz and 1 sec. for 40–0 Hz.

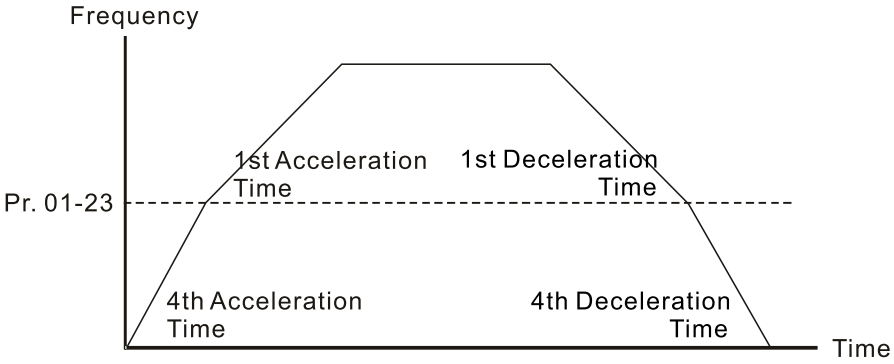

1st/4th Acceleration/Deceleration Frequency Switching

✓	**01-24**	S-curve for Acceleration Begin Time 1
✓	**01-25**	S-curve for Acceleration Arrival Time 2
✓	**01-26**	S-curve for Deceleration Begin Time 1
✓	**01-27**	S-curve for Deceleration Arrival Time 2

Default: 0.20

Settings Pr.01-45 = 0: 0.00–25.00 seconds

Pr.01-45 = 1: 0.0–250.0 seconds

- Using an S-curve gives the smoothest transition between speed changes. The acceleration and deceleration curve adjusts the acceleration and deceleration S-curve. When enabled, the drive produces a different acceleration and deceleration curve according to the acceleration and deceleration time.
- The S-curve function is invalid when you set the acceleration and deceleration time to 0.
- When Pr.01-12, Pr.01-14, Pr.01-16, Pr.01-18 ≥ Pr.01-24 and Pr.01-25,
  the actual acceleration time = Pr.01-12, Pr.01-14, Pr.01-16, Pr.01-18 + (Pr.01-24 + Pr.01-25) ÷ 2.
- When Pr.01-13, Pr.01-15, Pr.01-17, Pr.01-19 ≥ Pr.01-26 and Pr.01-27,
  the actual deceleration time = Pr.01-13, Pr.01-15, Pr.01-17, Pr.01-19 + (Pr.01-26 + Pr.01-27) ÷ 2

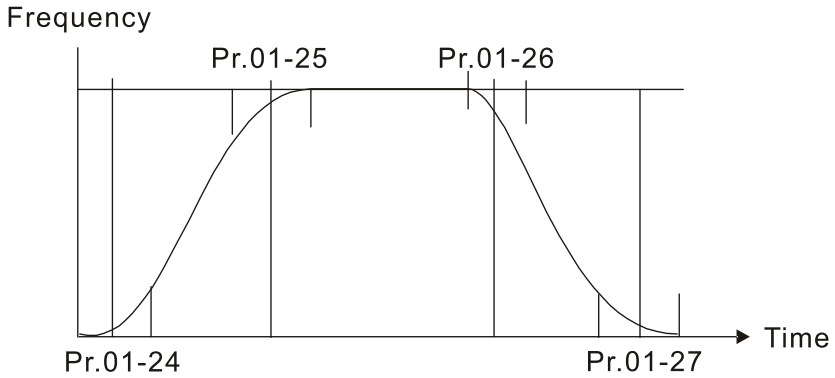

01-28	Skip Frequency 1 (Upper Limit)
01-29	Skip Frequency 1 (Lower Limit)
01-30	Skip Frequency 2 (Upper Limit)
01-31	Skip Frequency 2 (Lower Limit)
01-32	Skip Frequency 3 (Upper Limit)
01-33	Skip Frequency 3 (Lower Limit)

Default: 0.00

Settings 0.00~599.00 Hz

- Sets the AC motor drive's skip frequency. The drive's frequency setting skips these frequency ranges. However, the frequency output is continuous. There are no limits for these six parameters, and you can combine them. Pr.01-28 does not need to be greater than Pr.01-29; Pr.01-30 does not need to be greater than Pr.01-31; Pr.01-32 does not need to be greater than Pr.01-33. You can set Pr.01-28–01-33 as you required. There is no size distinction among these six parameters.
- These parameters set the skip frequency ranges for the AC motor drive. You can use this function to avoid frequencies that cause mechanical resonance. The skip frequencies are useful when a motor has resonance vibration at a specific frequency bandwidth. Skipping this frequency avoids the vibration. There are three frequency skip zones available.
- You can set the Frequency command (F) within the range of skip frequencies. Then the output frequency (H) is limited to the lower limit of skip frequency ranges.
- During acceleration and deceleration, the output frequency still passes through the skip frequency ranges.

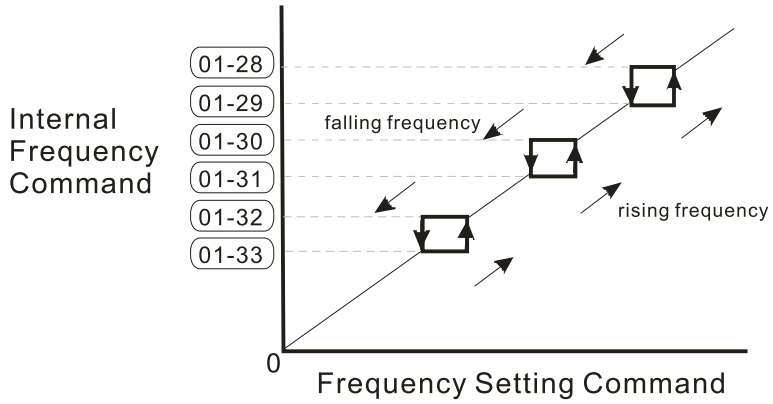

01-34	Zero-speed Mode

Default: 0

Settings 0: Output waiting
1: Zero-speed operation
2: Minimum frequency (Refer to Pr.01-07 and Pr.01-41)

- When the drive's Frequency command is lower than Fmin (Pr.01-07 or Pr.01-41), the drive operates according to this parameter.
- 0: the AC motor drive is in waiting mode without voltage output from terminals U, V, W.

1: the drive executes the DC brake by Vmin (Pr.01-08 and Pr.01-42) in V/F, FOC sensorless, and SVC modes. And it executes zero-speed operation in VFPG and FOCPG mode.

2: the AC motor drive runs using Fmin (Pr.01-07, Pr.01-41) and Vmin (Pr.01-08, Pr.01-42) in V/F, VFPG, SVC, FOC sensorless and FOCPG modes.

- In V/F, VFPG, SVC and FOC sensorless modes:

  Pr.01-11 Output Frequency Lower Limit > Pr.01-07 Fmin

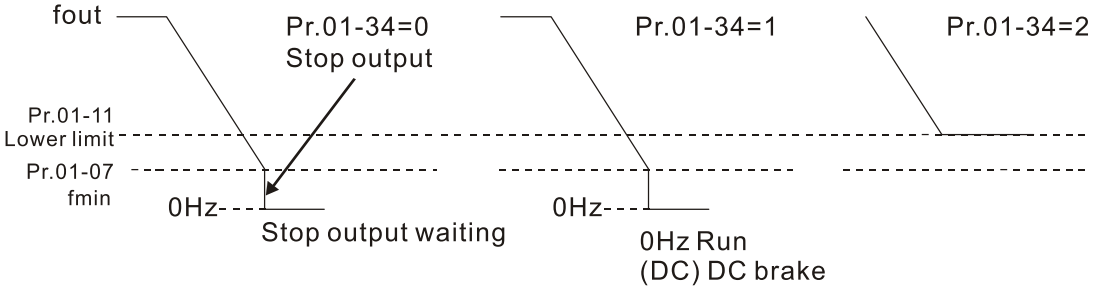

  Pr.01-11 Output Frequency Lower Limit < Pr.01-07 Fmin

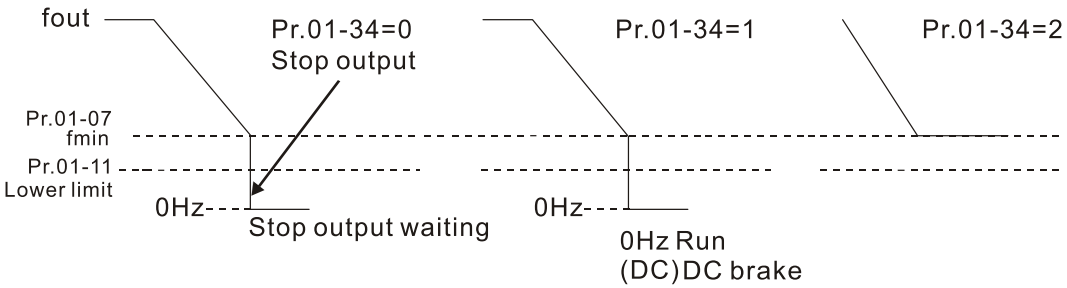

- In FOCPG mode, when Pr.01-34 is set to 2, the AC motor drive operates according to this setting.

  Pr.01-11 Output Frequency Lower Limit > Pr.01-07 Fmin

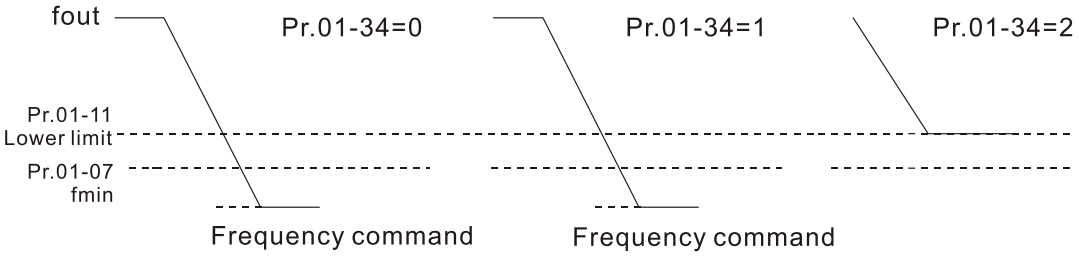

  Pr.01-11 Output Frequency Lower Limit < Pr.01-07 Fmin

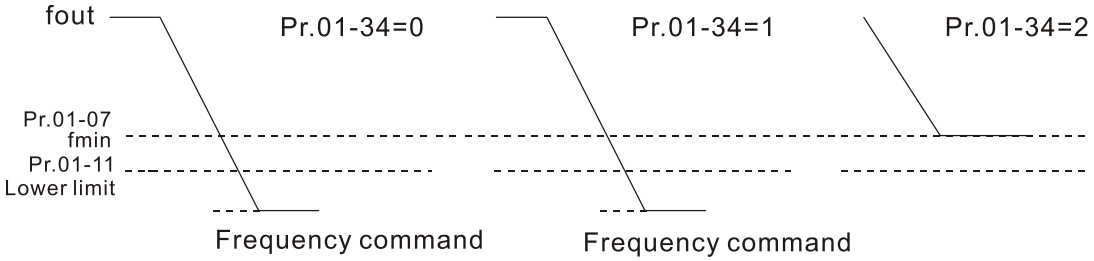

01-43 V/F Curve Selection

Default: 0

Settings
0: V/F curve determined by Pr.01-00–01-08
1: V/F curve to the power of 1.5
2: V/F curve to the power of 2
3: 60 Hz, voltage saturation in 50 Hz
4: 72 Hz, voltage saturation in 60 Hz
5: 50 Hz, decrease gradually with cube
6: 50 Hz, decrease gradually with square
7: 60 Hz, decrease gradually with cube
8: 60 Hz, decrease gradually with square
9: 50 Hz, medium starting torque
10: 50 Hz, high starting torque
11: 60 Hz, medium starting torque
12: 60 Hz, high starting torque
13: 90 Hz, voltage saturation in 60 Hz
14: 120 Hz, voltage saturation in 60 Hz
15: 180 Hz, voltage saturation in 60 Hz

- When setting to 0, refer to Pr.01-01–01-08 for the motor 1 V/F curve. For motor 2, refer to Pr.01-35–01-42.
- When setting to 1 or 2, the second and third voltage frequency settings are invalid.
- If the load of the motor is a variable torque load (torque is in direct proportion to the rotating speed, such as the load of a fan or a pump), the load torque is low at low rotating speed. You can decrease the input voltage appropriately to make the magnetic field of the input current smaller and reduce flux loss and iron loss for the motor to increase efficiency.
- When you set the V/F curve to high power, it has lower torque at low frequency, and the drive is not suitable for rapid acceleration and deceleration. Do NOT use this parameter for rapid acceleration and deceleration.

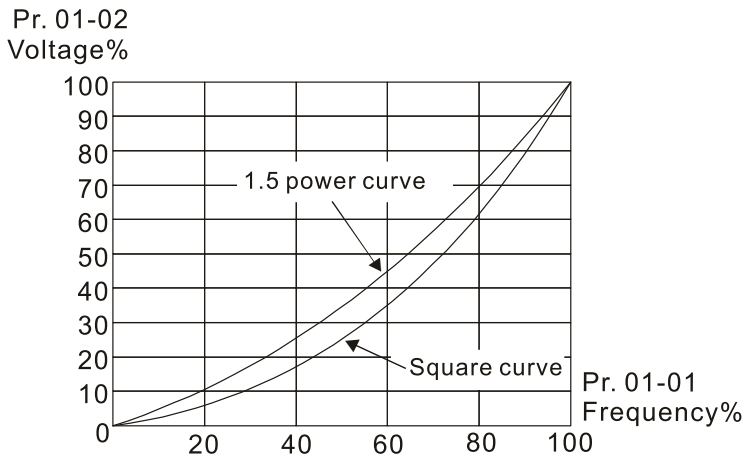

01-44 Auto-acceleration and Auto-deceleration Setting

Default: 0

Settings
0: Linear acceleration and linear deceleration
1: Auto-acceleration and linear deceleration
2: Linear acceleration and auto-deceleration
3: Auto-acceleration and auto-deceleration
4: Linear, stall prevention by auto-acceleration and auto-deceleration (limited by Pr.01-12 to Pr.01-21)

- 0 (linear acceleration and linear deceleration): the drive accelerates and decelerates according to the setting for Pr.01-12–01-19.
- 1 or 2 (auto / linear acceleration and auto / linear deceleration): the drive auto-tunes the acceleration and deceleration to effectively reduce the mechanical vibration during the load start-up and stop and make the auto-tuning process easier. It does not stall during acceleration and does not need a brake resistor during deceleration to stop. It can also improve operation efficiency and save energy.
- 3 (auto-acceleration and auto-deceleration–decelerating by the actual load): the drive auto-detects the load torque and automatically accelerates from the fastest acceleration time and smoothest start-up current to the setting frequency. During deceleration, the drive automatically determines the loaded regenerative energy to steadily and smoothly stop the motor in the fastest deceleration time.
- 4 (stall prevention by auto-acceleration and deceleration–reference to the acceleration and deceleration time settings): if the acceleration and deceleration time are within a reasonable range, the actual acceleration and deceleration time refer to Pr.01-12–01-19 settings. If the acceleration and deceleration time are too short, the actual acceleration and deceleration time are greater than the acceleration and deceleration time settings.

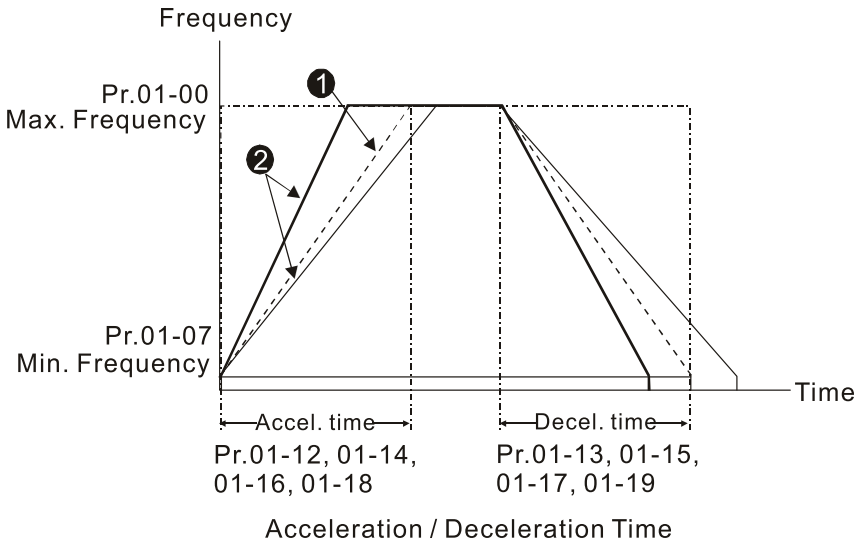

❶ Optimize the acceleration / deceleration time when Pr.01-44 is set to 0.
❷ Optimize the acceleration / deceleration time which load needs actually when Pr.01-44 is set to 3.

01-45 Time Unit for Acceleration and Deceleration and S Curve

Default: 0

Settings 0: Unit 0.01 sec.
1: Unit 0.1 sec.

01-46 CANopen Quick Stop Time

Default: 1.00

Settings Pr.01-45 = 0: 0.00–600.00 sec.
Pr.01-45 = 1: 0.0–6000.0 sec.

Sets the time required to decelerate from the maximum operation frequency (Pr.01-00) to 0.00 Hz through the CANopen control.

01-49 Deceleration Method Selection

Default: 0

Settings 0: Normal deceleration
1: Over-voltage energy restriction
2: Traction energy control (TEC)
3: Electromagnetic energy traction control

Different control modes for Pr.01-49:

Motor	Induction Motor (IM)					Permanent Magnet Synchronous Motor (PM)				Synchronous Reluctance Motor (SynRM)
Control Mode	VF	VFPG	SVC	FOC PG	FOC	PM SVC	FOCPG PM	PM FOC	HFI	
0: Normal deceleration	✓	✓	✓	✓	✓	✓	✓	✓	✓	✓
1: Over-voltage energy restriction	✓	✓								
2: Traction energy control (TEC)	✓	✓								
3: Electromagnetic energy traction control	✓	✓			✓					

0: The drive decelerates or stops based on the original deceleration time settings. Use this setting when brake resistors are used.

1: During deceleration, the drive controls the motor according to Pr.06-01 (Over-voltage Stall Prevention) setting and the regenerative DC bus voltage. When the regenerative DC bus voltage reaches 95% of Pr.06-01, the controller is enabled. If Pr.06-01 = 0, the drive controls based on the working voltage and regenerative DC bus voltage instead. When using this method, the drive decelerates according to the deceleration time setting. However, the actual deceleration time is equal to or larger than the deceleration setting time.

2: During deceleration, the drive controls the motor according to Pr.06-01 (Over-voltage Stall Prevention) setting and the regenerative DC bus voltage. When the regenerative DC bus voltage reaches 95% of Pr.06-01, the drive dynamically adjusts the output frequency and output voltage to consume the regenerative energy. Use this method when the deceleration time that is set to fulfill the system requirement for application triggers over-voltage.

- 3: During operation (acceleration / steady speed / deceleration), the drive adjusts the output voltage according to the amount of regenerative energy and consumes the regenerative energy timely to reduce the risk of over-voltage. Moreover, you can also use Pr.01-50 (Electromagnetic Traction Energy Consumption Coefficient) to adjust the drive's output voltage strength.
- If you use the electromagnetic energy traction control (Pr.01-49 = 3) during linear deceleration (no triggering of over-voltage stall prevention), you can enhance the output current by increasing the output voltage (V_{out}) to further suppress the regenerative DC bus voltage that is prompt to rise. Using this function with Pr.06-02 = 1 (Smart Over-voltage Stall Prevention) can achieve a smoother and faster deceleration.

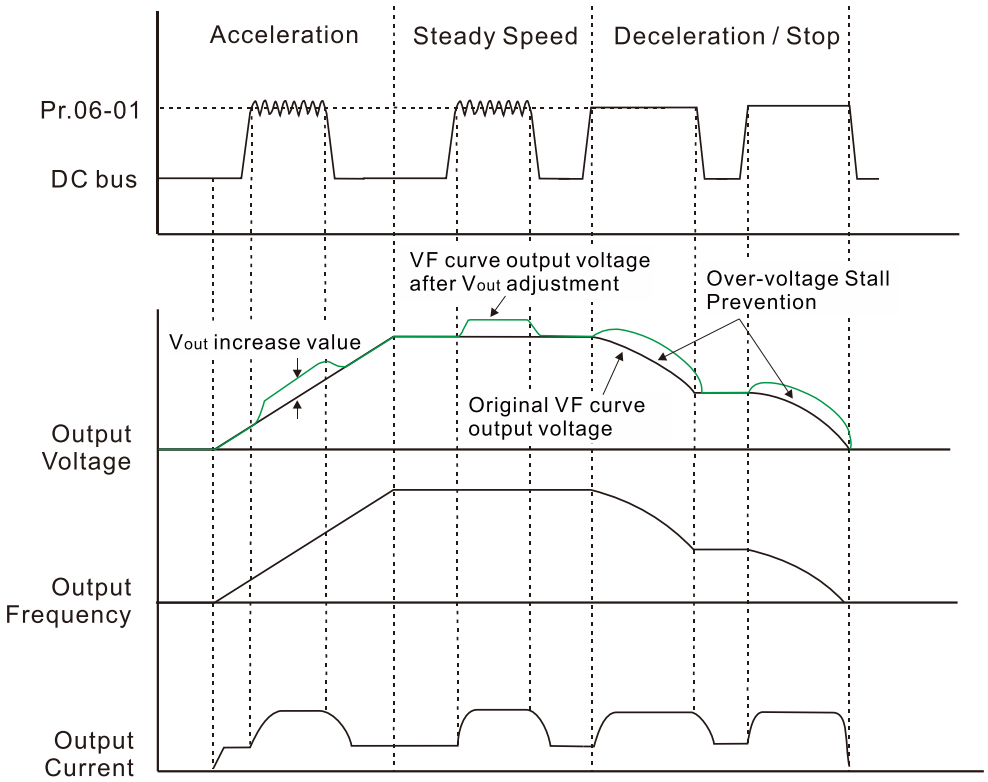

- Electromagnetic energy traction control activates in the following three conditions:
  1. Activates when DC bus is larger than the over-voltage stall prevention level (Pr.06-01) during acceleration and deactivates once Pr.06-01 is disabled.
  2. Activates when DC bus is larger than the over-voltage stall prevention level (Pr.06-01) during steady operation and deactivates once Pr.06-01 is disabled.
  3. Activates during deceleration (including stop) and deactivates once acceleration occurs or deceleration is stopped.
- When Pr.01-49 = 3, Pr.06-02 = 1 (Smart Over-voltage Stall Prevention) is automatically set to increase the stability during deceleration.
- Related parameters: Pr.12-08, Pr.12-09, Pr.12-10 (Refer to the following description of parameter setting)

12-08 Deviation Value of TEC Action Level

Default: 15.0

Settings 0.0–120.0 V

When the regenerative energy restriction is set as Traction Energy Control (TEC) (Pr.01-49 = 2), and the DC bus reaches the over-voltage stall prevention (Pr.06-01) minus the deviation value of TEC action level (Pr.12-08), the regenerative energy restriction activates. Use Pr.12-08 to control the action level of this function.

12-09 Deviation Value of TEC Stop

Default: 15.0

Settings 0.0–120.0 V

When the regenerative energy restriction activates, and the DC bus reaches the start-up level minus the deviation value of TEC stop (Pr.12-09), the regenerative energy restriction stops. Use Pr.12-09 to control the stop level of this function.

12-10 TEC Voltage Compensation Filter Time

Default: 1.000

Settings 0.000–65.535 sec.

Adjust the output voltage filter time of the regenerative energy restriction.

01-50 Electromagnetic Traction Energy Consumption Coefficient

Default: 0.50

Settings 0.00–5.00 Hz

During acceleration / steady speed / deceleration, the drive will dynamically adjust the output voltage based on the DC bus voltage level in order to prevent the drive from tripping on over-voltage. The output voltage is adjusted based on this parameter setting.

The drive's output current and the efficiency of regenerative energy consumption increase when Pr.01-50 is increased. When Pr.01-50 is decreased, also the drive's output current and the efficiency of regenerative energy consumption will decrease.

When setting Pr.01-50, pay attention to the drive’s output current. The drive’s output current must be lower than 80% of the motor’s rated current to prevent the motor from overheating.

01-51 Flux-weakening Overload Stall Prevention Time

Default: 1.00

Settings 0.00–600.00 sec.

The parameter is valid only when the speed control mode is SynRM sensorless control (Pr.00-11 = 8).

When the motor drive operates in flux-weakening region and the load of the motor driven by the motor drive suddenly increases, and cause the motor to slow down, you can adjust the parameter if the speed of motor oscillates, or OC error occurs.

01-52 Zero-speed Delay Time

Default: 0

Settings 0–65535 ms

01-53 Zero-speed Delay Level

Default: 1.00

Settings 0.00–599.00 Hz

- This function applies to IMFOCPG and IMFOC control modes.
- In application for large inertia or rapid deceleration, it often occurs that the frequency command programs decelerating to the minimum frequency, the drive stops outputting at that moment, but the motor's actual speed has not reached zero-speed yet, therefore, the motor goes to free-run status. The zero-speed delay function refers to the actual (or estimated) rotor frequency, it counts the setting time of Pr.01-52 after the actual (or estimated) rotor frequency reaches the setting level of Pr.01-53, then the drive stops outputting.

01-54 Zero-speed Delay Time Out

Default: 0.00

Settings 0.00–655.35 sec.

- If the actual (or estimated) rotor frequency fails to be restrained under the Pr.01-53 frequency level, and the difference error is not triggered, the drive may be unable to stop outputting. Set this parameter for this condition. When the frequency command decelerates to the minimum frequency and starts to count, this function forces the drive to stop outputting when it reaches the Pr.01-54 setting time.
- The actual motor speed reaches the Pr.01-53 level in Pr.01-54 setting time, and the drive stops outputting when the counting reaches Pr.01-52 setting time (Pr.01-54 setting time is still counting):

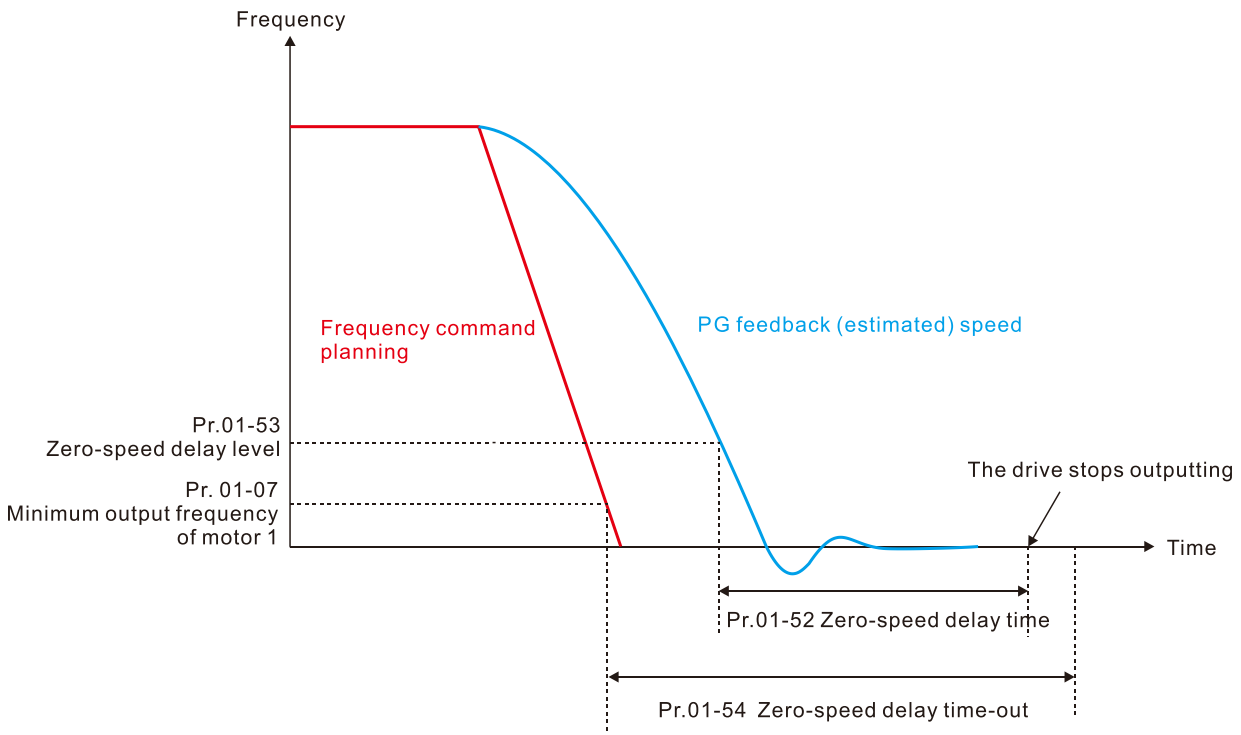

The motor actual speed does not reach the Pr.01-53 level in Pr.01-54 setting time:

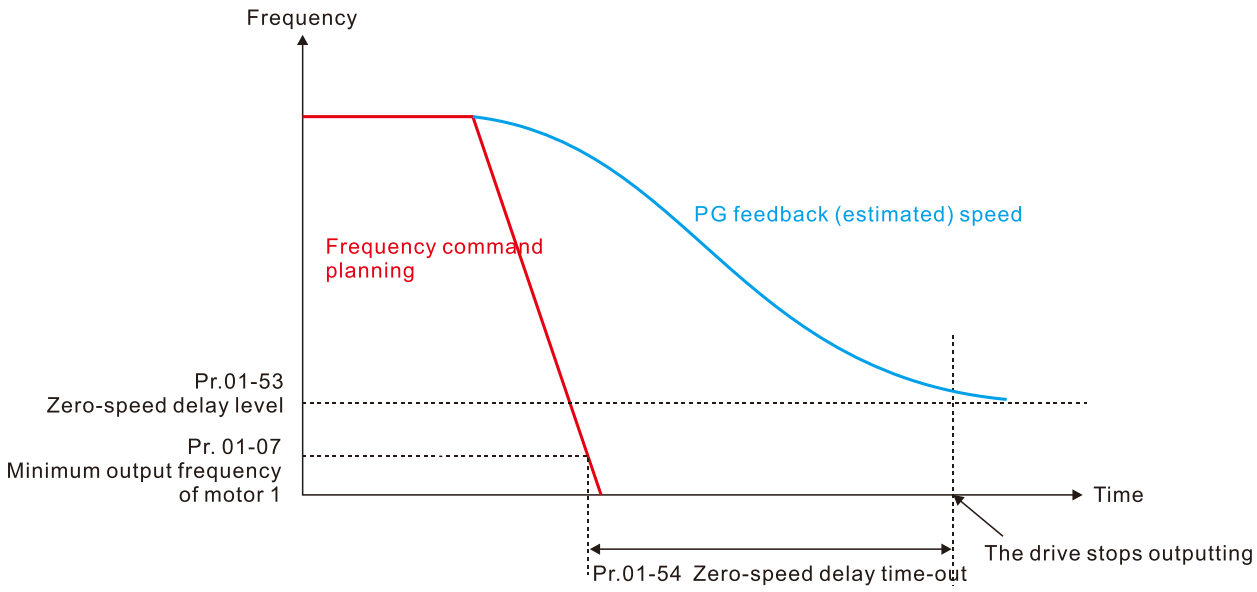

The motor actual speed reaches the Pr.01-53 level in Pr.01-54 setting time, but does not reach to 0 Hz in Pr.01-54 setting time:

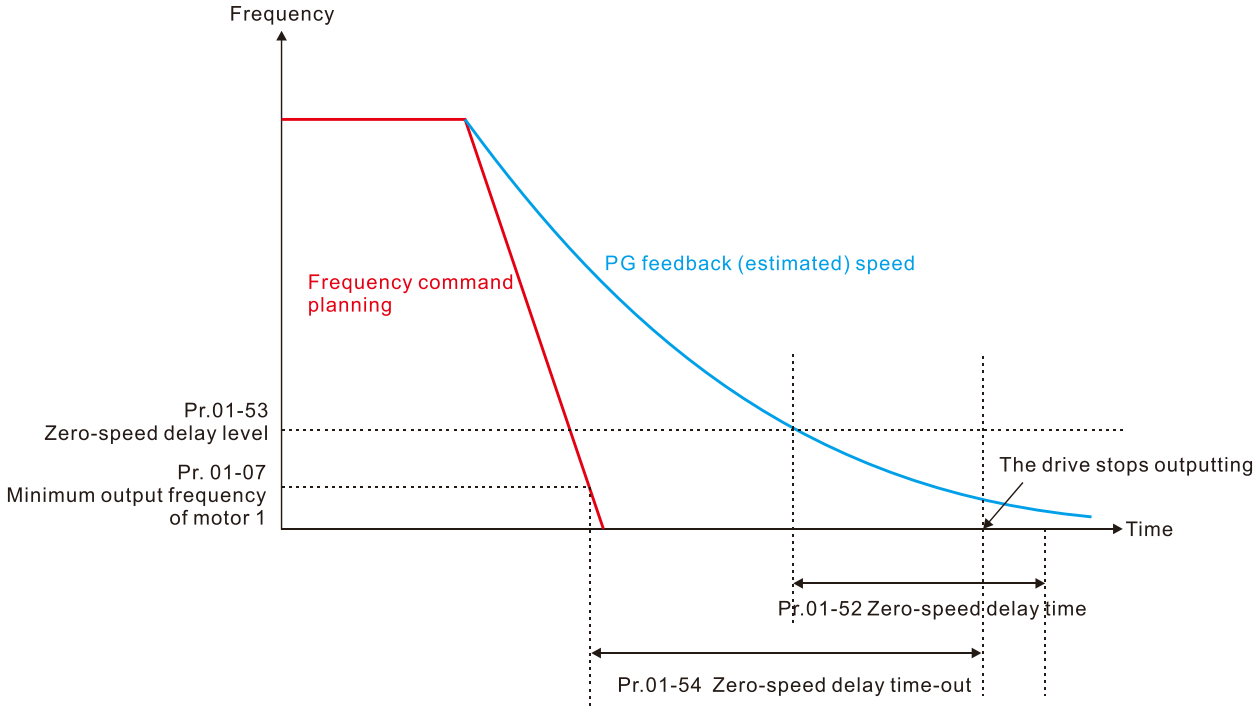

[This page intentionally left blank]

02 Digital Input / Output Parameter

You can set this parameter during operation.

02-00 Two-wire / Three-wire Operation Control

Default: 0

Settings
0: Two-wire mode 1, power on for operation control
1: Two-wire mode 2, power on for operation control
2: Three-wire, power on for operation control
7: Single-wire mode, the Servo ON terminal under position control mode (only the FWD terminal is valid)

This parameter sets the configuration of the terminals (Pr.00-21 = 1 or Pr.00-31 = 1) which control the operation. There are four different control modes listed in the following table.

Pr.02-00	Control Circuits of the External Terminal
Setting value: 0 Two-wire operation control FWD / STOP REV / STOP	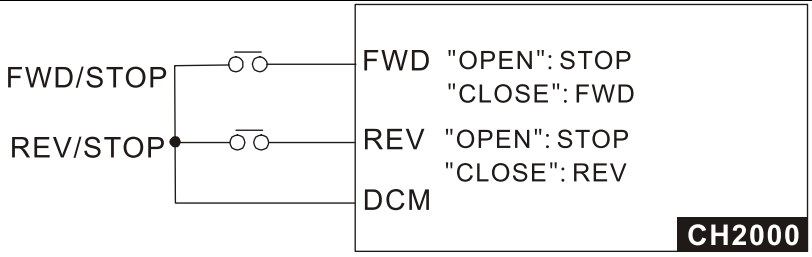
Setting value: 1 Two-wire operation control RUN/STOP REV/FWD	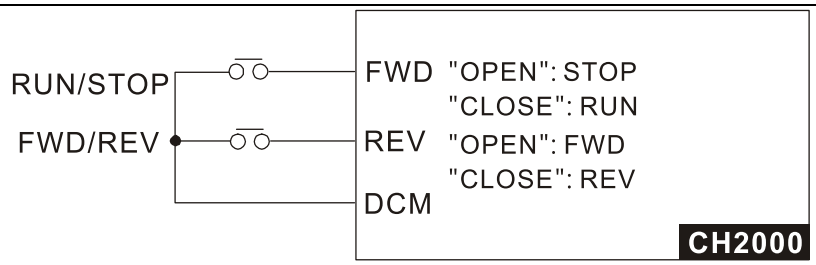
Setting value: 2 Three-wire operation control	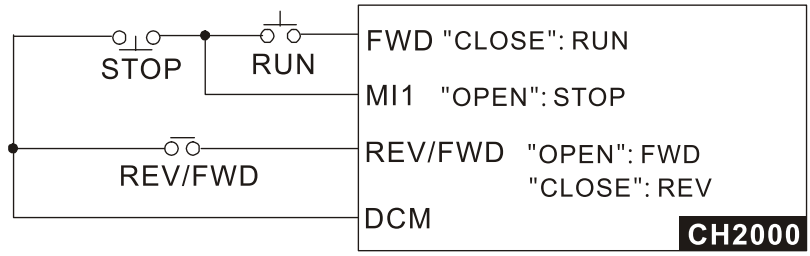
Setting value: 7 Single-wire operation control	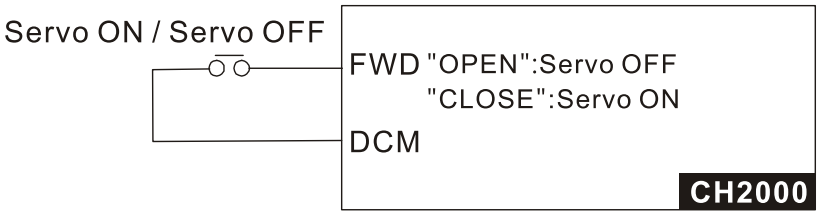

02-01 Multi-function Input Command 1 (MI1)

Default: 1

02-02 Multi-function Input Command 2 (MI2)

Default: 2

02-03 Multi-function Input Command 3 (MI3)

Default: 3

02-04 Multi-function Input Command 4 (MI4)

Default: 4

02-05	Multi-function Input Command 5 (MI5)
02-06	Multi-function Input Command 6 (MI6)
02-07	Multi-function Input Command 7 (MI7)
02-08	Multi-function Input Command 8 (MI8)
02-26	Input Terminal of I/O Extension Card (MI10)
02-27	Input Terminal of I/O Extension Card (MI11)
02-28	Input Terminal of I/O Extension Card (MI12)
02-29	Input Terminal of I/O Extension Card (MI13)
02-30	Input Terminal of I/O Extension Card (MI14)
02-31	Input Terminal of I/O Extension Card (MI15)

Default: 0

Settings 0: No function
1: Multi-step speed command 1 / multi-step position command 1
2: Multi-step speed command 2 / multi-step position command 2
3: Multi-step speed command 3 / multi-step position command 3
4: Multi-step speed command 4 / multi-step position command 4
5: Reset
6: JOG operation [by external control or KPC-CC01 (optional)]
7: Acceleration / deceleration speed inhibit
8: 1st and 2nd acceleration / deceleration time selection
9: 3rd and 4th acceleration / deceleration time selection
10: External Fault (EF) input (Pr.07-20)
11: Base Block (B.B) input from external
12: Output voltage stops
13: Cancel the setting of auto-acceleration / auto-deceleration time
14: Switch between motor 1 and motor 2
15: Rotating speed command from AVI
16: Rotating speed command from ACI
17: Rotating speed command from AUI
18: Forced to stop (Pr.07-20)
19: Frequency up command
20: Frequency down command
21: PID function disabled
22: Clear the counter
23: Input the counter value (MI6)
24: FWD JOG command
25: REV JOG command
26: TQC / FOC mode selection
27: ASR1 / ASR2 selection
28: Emergency stop (EF1)
29: Signal confirmation for Y-connection

30: Signal confirmation for Δ-connection
31: High torque bias (Pr.11-30)
32: Middle torque bias (Pr.11-31)
33: Low torque bias (Pr.11-32)
35: Enable single-point positioning
36: Enable multi-step position teaching function (valid at STOP)
37: Enable pulse-train position command position control
38: Disable write EEPROM function
39: Torque command direction
40: Force coasting to stop
41: HAND switch
42: AUTO switch
43: Enable resolution selection (Pr.02-48)
44: Negative limit switch (NL)
45: Positive limit switch (PL)
46: Homing (ORG)
47: Enable homing function
48: Mechanical gear ratio switch
49: Enable drive
50: Slave dEb action to execute
51: Selection for PLC mode bit 0
52: Selection for PLC mode bit 1
53: Trigger CANopen quick stop
55: Brake release
56: Local / Remote Selection
70: Force auxiliary frequency return to 0
71: Disable PID function, force PID output return to 0
72: Disable PID function, retain the output value before disabled
73: Force PID integral gain return to 0, disable integral
74: Reverse PID feedback
88: Multi-step position confirm
89: Speed / position control mode switch
  0: Speed mode
  1: Position mode
90: Position command source switch
  0: Inputs from internal register
  1: Inputs from external pulse
95: Multi speed limit 1
96: Multi speed limit 2
97: Multi speed limit 3
98: Multi speed limit 4

📖 This parameter selects the functions for each multi-function terminal.

- Pr.02-26–Pr.02-31 are entity input terminals only when extension cards are installed; otherwise, these are virtual terminals. For example, when using the multi-function extension card EMC-D42A, Pr.02-26–Pr.02-29 are defined as the corresponded parameters for MI10–MI13. In this case, Pr.02-30–Pr.02-31 are virtual terminals.
- When Pr.02-12 is defined as virtual terminal, use digital keypad KPC-CC01 or communication method to change its status (0: ON; 1: OFF) of bit 8–15.
- If Pr.02-00 is set to three-wire operation control, terminal MI1 is for the STOP contact. The function set previously for this terminal is automatically invalid.

Summary of function settings

Take the normally opened contact (N.O.) for example, ON: contact is closed, OFF: contact is open

Settings	Functions	Descriptions
0	No Function	
1	Multi-step speed command 1 / multi-step position command 1	You can set 15 steps of speed or 15 positions with the digital status of these four terminals. You can use 16-steps of speed if you include the master speed when setting as 15 steps of speed (refer to Parameter Group 04 Multi-step Speed Parameters).
2	Multi-step speed command 2 / multi-step position command 2	
3	Multi-step speed command 3 / multi-step position command 3	
4	Multi-step speed command 4/ multi-step position command 4	
5	Reset	Use this terminal to reset the drive after clearing a drive fault.
6	JOG operation [by external control or KPC-CC01 (optional)]	This function is valid when the source of the operation command is the external terminals. The JOG operation executes when the drive stops completely. While running, you can still change the operation direction, and the STOP key on the keypad* and the STOP command from communications are valid. Once the external terminal receives the OFF command, the motor stops in the JOG deceleration time. Refer to Pr.01-20–Pr.01-22 for details. *: This function is valid when Pr.00-32 is set to 1. 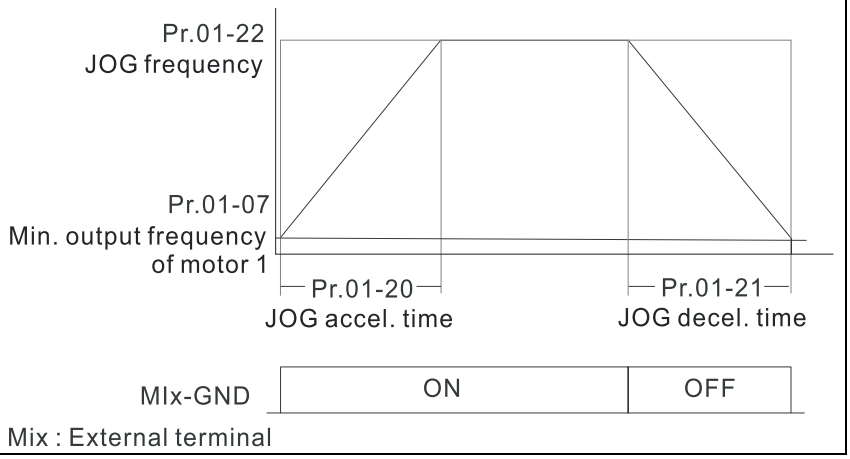

Settings	Functions	Descriptions
7	Acceleration / deceleration speed inhibit	When you enable this function, the drive stops acceleration or deceleration immediately. After you disable this function, the AC motor drive starts to accelerate or decelerate from the inhibit point. 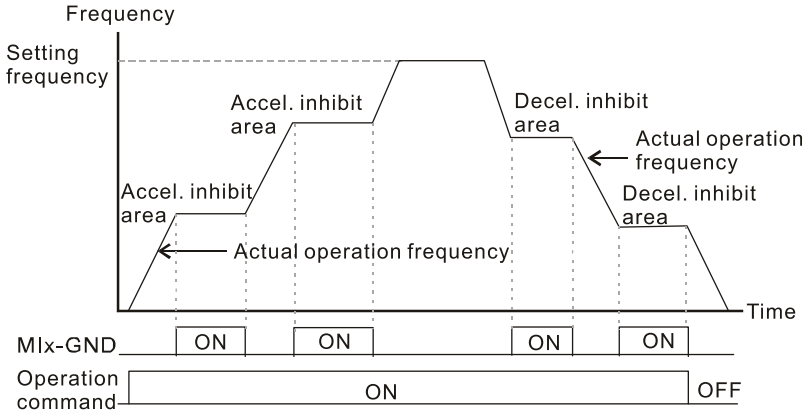
8	1st and 2nd acceleration / deceleration time selection	You can select the acceleration and deceleration time of the drive with this function, or from the digital status of the terminals; there are four acceleration and deceleration selections.
9	3rd and 4th acceleration / deceleration time selection	
10	External Fault (EF) Input	For external fault input, the drive decelerates according to the Pr.07-20 setting, and the keypad shows “EF” (it shows the fault record when an external fault occurs). The drive keeps running until the fault is cleared (terminal status restored) after RESET.
11	Base block (B.B.) input from external	ON: the output of the drive stops immediately. The motor is in free run and the keypad displays the B.B. signal. Refer to Pr.07-08 for details.
12	Output voltage stops	ON: the output of the drive stops immediately and the motor is in free run status. The drive is in output waiting status until the switch is turned to OFF, and then the drive restarts and runs to the current setting frequency. 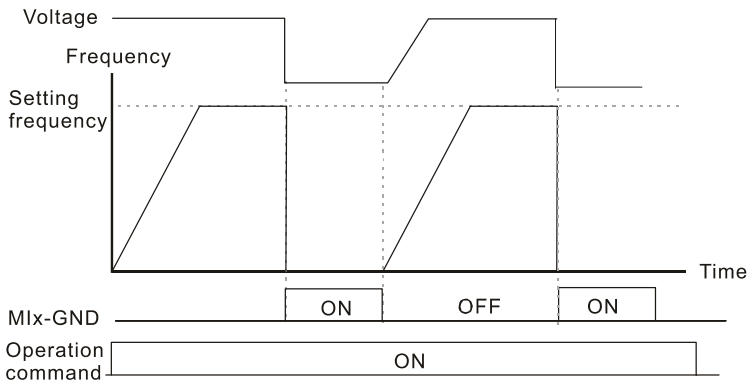
13	Cancel the setting of auto-acceleration / auto-deceleration time	Set Pr.01-44 to one of the 01–04 setting modes before using this function. When this function is enabled, OFF is for auto mode and ON is for linear acceleration / deceleration.

Settings	Functions	Descriptions
14	Switch between motor 1 and motor 2	ON: use parameters for motor 2 OFF: use parameters for motor 1
15	Rotating speed command form AVI	ON: force the source of the drive's frequency to be AVI. If the rotating speed commands are set to AVI, ACI and AUI at the same time, the priority is AVI > ACI > AUI.
16	Rotating speed command form ACI	ON: force the source of the drive's frequency to be ACI. If the rotating speed commands are set to AVI, ACI and AVI at the same time, the priority is AVI > ACI > AUI.
17	Rotating speed command form AUI	ON: force the source of the drive's frequency to be AUI. If the rotating speed commands are set to AVI, ACI and AVI at the same time, the priority is AVI > ACI > AUI.
18	Forced to Stop (Pr.07-20)	ON: the drive ramps to stop according to the Pr.07-20 setting.
19	Frequency up command	ON: the frequency of the drive increases or decreases by one unit. If this function remains ON continuously, the frequency increases or decreases according to Pr.02-09 / Pr.02-10. The Frequency command returns to zero when the drive stops and the displayed frequency is 0.00 Hz. If you select Pr.11-00, bit 7 = 1, the frequency is not saved.
20	Frequency down command	
21	PID function disabled	ON: the PID function is disabled.
22	Clear the counter	ON: the current counter value is cleared and displays 0. The drive counts up when this function is disabled.
23	Input the counter value (MI6)	ON: the counter value increases by one. Use the function with Pr.02-19.
24	FWD JOG command	This function is valid when the source of the operation command is external terminal. ON: the drive executes forward JOG. When executing the JOG command in torque mode, the drive automatically switches to speed mode. The drive returns to torque mode after the JOG command is complete.
25	REV JOG command	This function is valid when the source of the operation command is external terminal. ON: the drive executes reverse JOG. When executing the JOG command in torque mode, the drive automatically switches to speed mode. The drive returns to torque mode after the JOG command is complete.

Settings	Functions	Descriptions
26	TQC / FOC mode selection	ON: TQC mode. OFF: FOC mode. 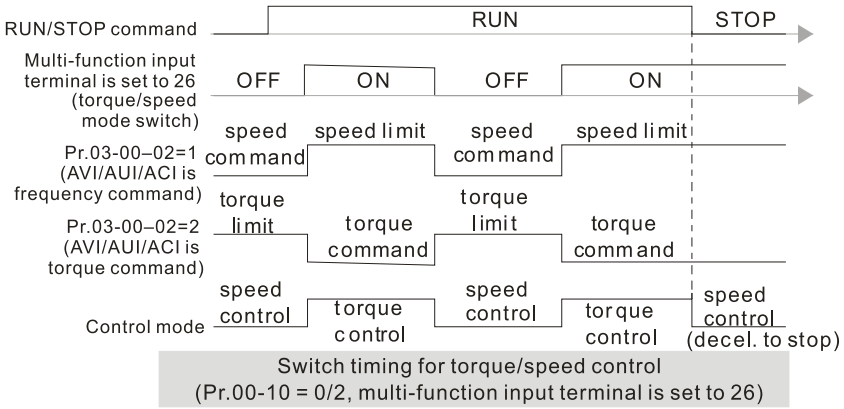
27	ASR1 / ASR2 selection	ON: the speed is adjusted by the ASR 2 setting. OFF: the speed is adjusted by the ASR 1 setting. Refer to Pr.11-02 for details.
28	Emergency stop (EF1)	ON: the output of the drive stops immediately, displays “EF1” on the keypad, and the motor is in free run status. The drive keeps running until the fault is cleared after you press RESET on the keypad (EF: External Fault). 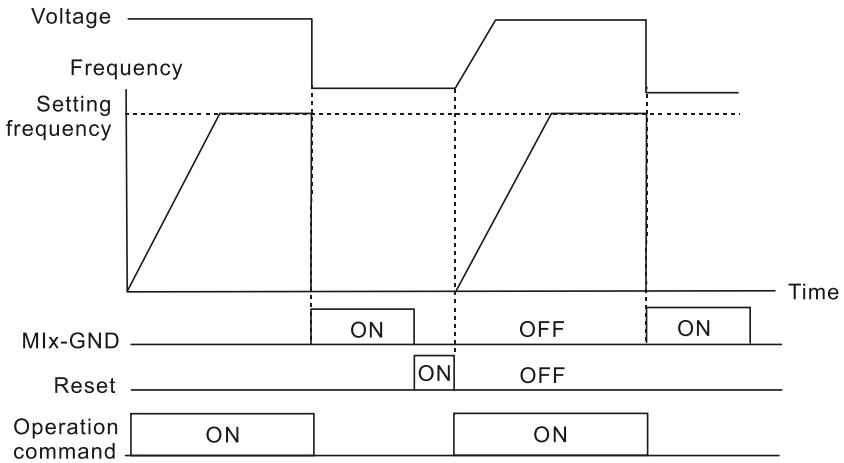
29	Signal confirmation for Y-connection	When the control mode is V/F, ON: the drive operates by the first V/F.
30	Signal confirmation for Δ-connection	When the control mode is V/F, ON: the drive operates by the second V/F.
31	High torque bias	Refer to Pr.11-30–Pr.11-32 for details.
32	Middle torque bias	
33	Low torque bias	
35	Enable single-point positioning	ON: the AC motor drive executes the single-point positioning according to Pr.11-65 (single-point positioning position high byte) and Pr.11-66 (single-point positioning position low byte). This function is valid only for IMFOCPG and PMFOCPG control modes.

Settings	Functions	Descriptions
		1. MIx = 35 (enable single-point positioning), MOx = 39 (position reached), Pr.10-01 = 1024 (encoder PPR), Pr.11-65 = 0 and Pr.11-66 = 0 In speed control mode (Pr.00-10 = 0), activate MIx = 35 (enable single-point positioning), the motor is positioned according to Pr.11-65 and Pr.11-66 settings. See the diagram below: 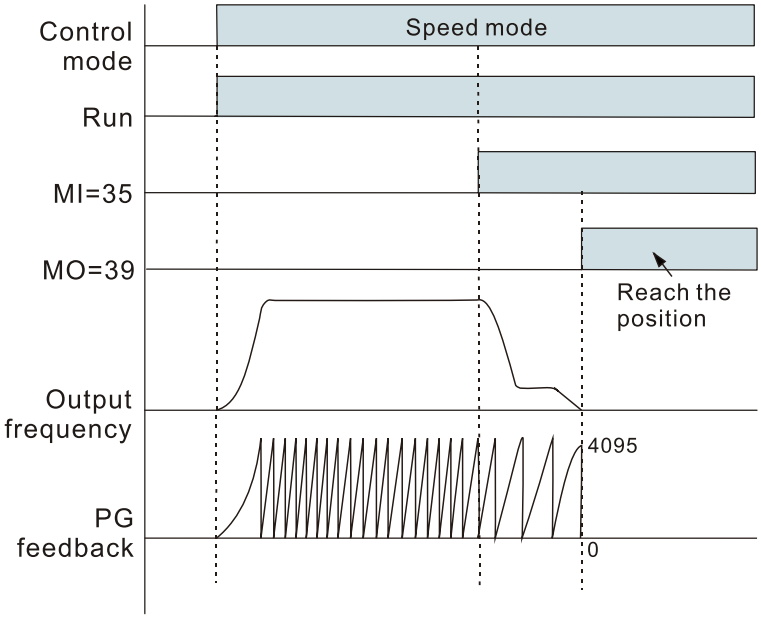 2. MIx = 35 (enable single-point positioning), MOx = 39 (position reached), Pr.10-01 = 1024 (encoder PPR), Pr.11-65 = 0 and Pr.11-66 = 3072 In position control mode (Pr.00-10 = 1), activate MIx = 35 (enable single-point positioning), the motor runs from the current single revolution position to Pr.11-65 and Pr.11-66 setting positions and the moving position does not exceed one revolution if single revolution coordinate system is finished. See the diagram below: 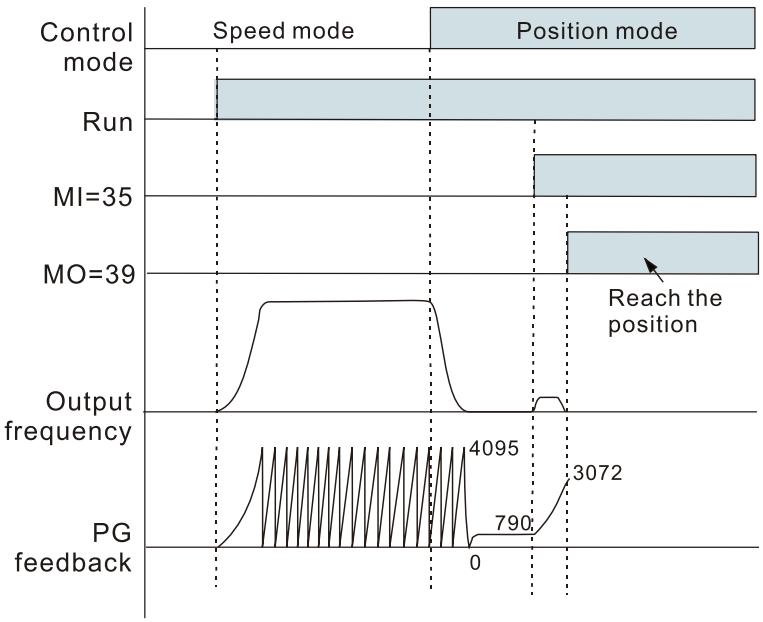

Settings	Functions	Descriptions
		3. MIx = 35 (enable single-point positioning), MOx = 39 (position reached), Pr.10-01 = 1024 (encoder PPR), Pr.11-65 = 0 and Pr.11-66 = 0 In position control mode (Pr.00-10 = 1), activate MIx = 35 (enable single-point positioning), the motor runs through the z-phase to finish single revolution coordinate system before executing single-point positioning function if single revolution coordinate system is not finished. See the diagram below: 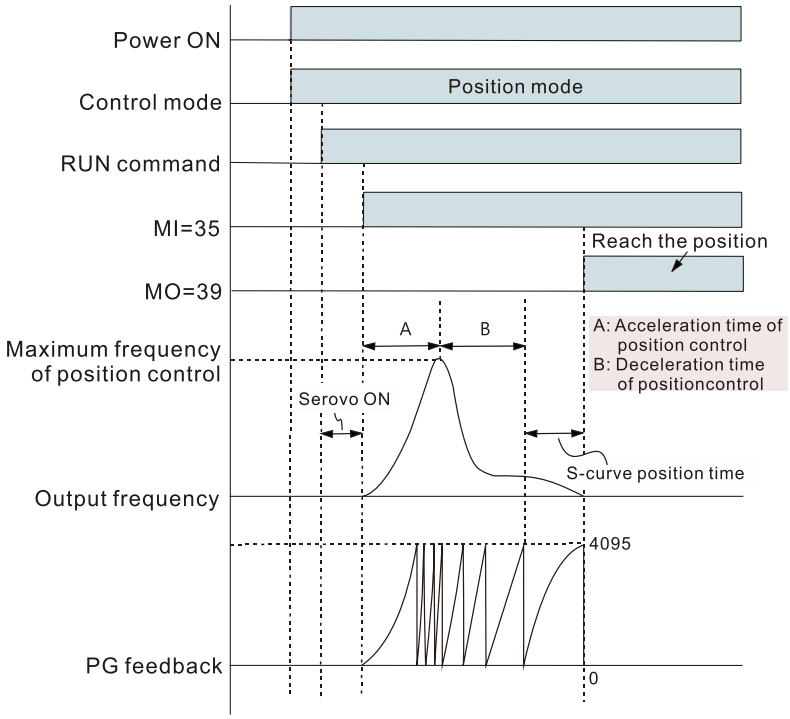
36	Enable multi-step position teaching function (valid at STOP)	Multi-step position teaching function can execute no matter the motor drive is RUN or STOP. ON / OFF: the drive determines the corresponding multi-step positions according to MI1–MI4 ON / OFF status, and the motor's current positions are written into these corresponding multi-step positions.. 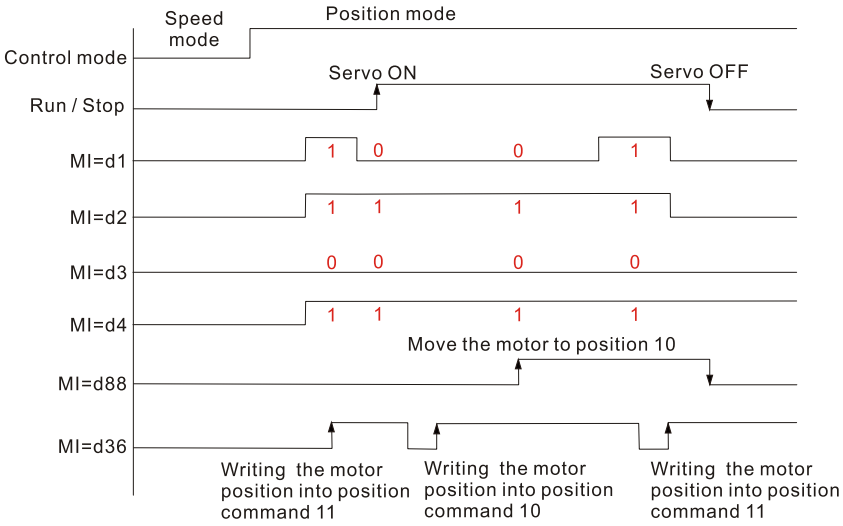

<table>
<tr><th>Settings</th><th>Functions</th><th>Descriptions</th></tr>
<tr><td>37</td><td>Enable pulse-train command position command</td><td>ON: The drive automatically switches to position mode and the position command source is pulse-train input.
 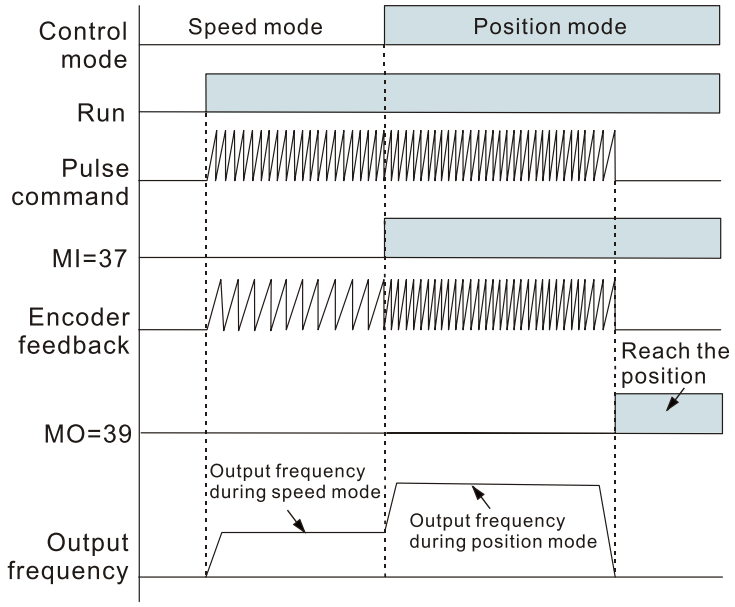
</td></tr>
<tr><td>38</td><td>Disable writing EEPROM function</td><td>ON: writing to EEPROM is disabled. Changed parameters are not saved after power off.</td></tr>
<tr><td>39</td><td>Torque command direction</td><td>For torque control (Pr.00-10 = 2), when the torque command is AVI or ACI, ON: negative torque.</td></tr>
<tr><td>40</td><td>Force coasting to stop</td><td>ON: during operation, the motor coasts to stop.</td></tr>
<tr><td>41</td><td>HAND switch</td><td rowspan="2">1. When the MI terminal switches to OFF, it executes a STOP command. Therefore, if the MI terminal switches to OFF during operation, the drive stops.
2. Use the optional keypad KPC-CC01 to switch between HAND and AUTO. The drive stops first, and then switches to HAND or AUTO status.
3. The optional digital keypad KPC-CC01 displays the current status of the drive (HAND / OFF / AUTO).
<table>
<tr><th></th><th>bit1</th><th>bit0</th></tr>
<tr><td>OFF</td><td>0</td><td>0</td></tr>
<tr><td>AUTO</td><td>0</td><td>1</td></tr>
<tr><td>HAND</td><td>1</td><td>0</td></tr>
<tr><td>OFF</td><td>1</td><td>1</td></tr>
</table></td></tr>
<tr><td>42</td><td>AUTO switch</td></tr>
<tr><td>43</td><td>Enable resolution selection</td><td>Refer to Pr.02-48 for details.</td></tr>
</table>

<table>
<tr><th>Settings</th><th>Functions</th><th>Descriptions</th></tr>
<tr><td>44</td><td>Negative limit switch (NL)</td><td>Signal input for negative limit switch (NL).
ON: The drive executes homing based on Pr.11-68–Pr.11-74 settings.</td></tr>
<tr><td>45</td><td>Positive limit switch (PL)</td><td>Signal input for positive limit switch (PL).
ON: The drive executes homing based on Pr.11-68–Pr.11-74 settings.</td></tr>
<tr><td>46</td><td>Homing (ORG)</td><td>Origin point input.
ON: The drive executes homing based on Pr.11-68–Pr.11-74 settings.</td></tr>
<tr><td>47</td><td>Enable homing function</td><td>When this terminal is active in position control mode (Pr.00-10 = 1), the drive executes homing based on Pr.11-68–Pr.11-74 settings.</td></tr>
<tr><td>48</td><td>Mechanical gear ratio switch</td><td>ON: The mechanical gear ratio switches to the second set of settings (refer to Pr.10-04–Pr.10-07).
OFF: Pr.10-04 and Pr.10-05 (the first set of settings)
ON: Pr.10-06 and Pr.10-07 (the second set of settings)</td></tr>
<tr><td>49</td><td>Enable drive</td><td>When the drive is enabled, the RUN command is valid.
When the drive is disabled, the RUN command is invalid.
When the drive is operating, the motor coasts to stop.
This function varies with MOx = 45.</td></tr>
<tr><td>50</td><td>Slave dEb action to execute</td><td>Enter the message setting in this parameter when the master triggers dEb. This ensures that the slave also triggers dEb, then the master and slave stop simultaneously.</td></tr>
<tr><td>51</td><td>Selection for PLC mode (bit 0)</td><td rowspan="2"><table>
<tr><th>PLC status</th><th>bit1</th><th>bit0</th></tr>
<tr><td>Disable PLC function (PLC 0)</td><td>0</td><td>0</td></tr>
<tr><td>Trigger PLC to operation (PLC 1)</td><td>0</td><td>1</td></tr>
<tr><td>Trigger PLC to stop (PLC 2)</td><td>1</td><td>0</td></tr>
<tr><td>No function</td><td>1</td><td>1</td></tr>
</table></td></tr>
<tr><td>52</td><td>Selection for PLC mode (bit 1)</td></tr>
<tr><td>53</td><td>Trigger CANopen quick stop</td><td>When this function is enabled under CANopen control, it changes to Quick Stop. Refer to Chapter 15 CANopen overview for more details.</td></tr>
<tr><td>55</td><td>Brake release</td><td>When Pr.02-56 ≠ 0, connect the brake release signal to multi-function input terminals. When the brake is opened, and the drive does not receive its confirming signal, the Brk error occurs.</td></tr>
</table>

<table>
<tr><th>Settings</th><th>Functions</th><th>Descriptions</th></tr>
<tr><td>56</td><td>Local / Remote selection</td><td>Use Pr.00-29 to select for LOCAL / REMOTE mode (refer to Pr.00-29). When Pr.00-29 is not set to 0, the digital keypad KPC-CC01 displays the LOC / REM status. (KPC-CC01 firmware version 1.021 and above).
<table>
<tr><td></td><td>bit0</td></tr>
<tr><td>REM</td><td>0</td></tr>
<tr><td>LOC</td><td>1</td></tr>
</table></td></tr>
<tr><td>70</td><td>Force auxiliary frequency return to 0</td><td>When the terminal is active (ON):
Pr.00-35 = 0, master and auxiliary frequency function disable, the PID continues to operate.
Pr.00-35 ≠ 0, master and auxiliary frequency function enable, the auxiliary frequency is forced to 0.</td></tr>
<tr><td>71</td><td>Disable PID function, force PID output to return to 0</td><td>When the master and auxiliary frequencies are enabled and when using the PID function, ON: PID does not operate, returns to integral value to 0, and forces the PID output to return to 0.</td></tr>
<tr><td>72</td><td>Disable PID function, retain the output value before disabled</td><td>When the master and auxiliary frequency are enabled, and the PID function is enabled, and the terminal contact of this parameter is ON, then PID does not operate, and its output value remains the same as the value before it was disabled.</td></tr>
<tr><td>73</td><td>Force PID integral gain to return to 0, disable integral</td><td>ON: PID continues to operate, disable the integral control, and return the integral value to 0.</td></tr>
<tr><td>74</td><td>PID feedback reversed</td><td>ON: PID negative feedback becomes positive feedback, or PID positive feedback becomes negative feedback.</td></tr>
<tr><td>88</td><td>Multi-step position command confirm</td><td>When the terminal is active and the drive is in Servo ON status under the position control mode (Pr.00-10 = 1), the drive determines the corresponding P2P positions according to MI1–MI4 ON/OFF status, and the motor moves to that corresponding position.
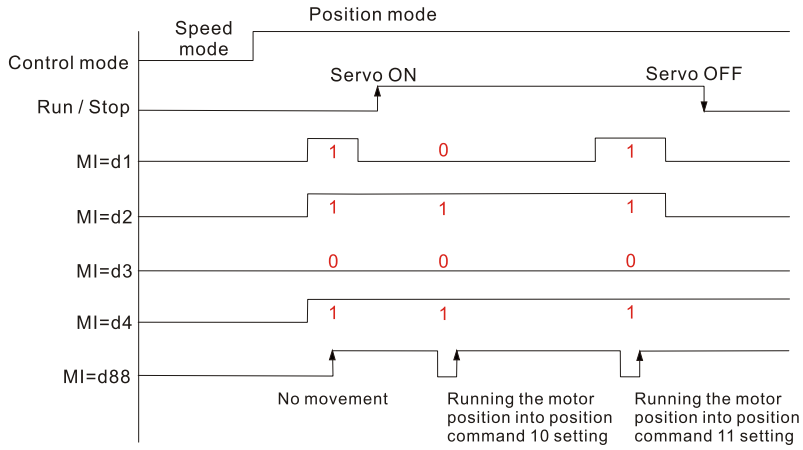

1. When the drive starts, the multi-step position commands (MIx = 1–4) are simply to switch between multiple positions, which does</td></tr>
</table>

<table>
<tr><th>Settings</th><th>Functions</th><th>Descriptions</th></tr>
<tr><td></td><td></td><td>not make the motor run. To make the motor move to the corresponding point-to-point position, set and activate the multi-function input terminal MIx = 88 (multi-step position command confirmation).
2. The route planning immediately changes once there is any change in multi-step position, speed or acceleration / deceleration time in the process of moving to the targeted position.
(1) Each of the multi-function input terminals (MI1–MI15) can be used for the multi-step positioning position control function. However, a maximum of four terminals, using a binary 4-bit, can be used at the same time to switch between 15 positions.
<table>
<tr><th>Multi-Step Position</th><th>Multi-Step Position Command 4</th><th>Multi-Step Position Command 3</th><th>Multi-Step Position Command 2</th><th>Multi-Step Position Command 1</th></tr>
<tr><td>0 (Disabled)</td><td>OFF</td><td>OFF</td><td>OFF</td><td>OFF</td></tr>
<tr><td>1</td><td>OFF</td><td>OFF</td><td>OFF</td><td>ON</td></tr>
<tr><td>2</td><td>OFF</td><td>OFF</td><td>ON</td><td>OFF</td></tr>
<tr><td>3</td><td>OFF</td><td>OFF</td><td>ON</td><td>ON</td></tr>
<tr><td>4</td><td>OFF</td><td>ON</td><td>OFF</td><td>OFF</td></tr>
<tr><td>5</td><td>OFF</td><td>ON</td><td>OFF</td><td>ON</td></tr>
<tr><td>6</td><td>OFF</td><td>ON</td><td>ON</td><td>OFF</td></tr>
<tr><td>7</td><td>OFF</td><td>ON</td><td>ON</td><td>ON</td></tr>
<tr><td>8</td><td>ON</td><td>OFF</td><td>OFF</td><td>OFF</td></tr>
<tr><td>9</td><td>ON</td><td>OFF</td><td>OFF</td><td>ON</td></tr>
<tr><td>10</td><td>ON</td><td>OFF</td><td>ON</td><td>OFF</td></tr>
<tr><td>11</td><td>ON</td><td>OFF</td><td>ON</td><td>ON</td></tr>
<tr><td>12</td><td>ON</td><td>ON</td><td>OFF</td><td>OFF</td></tr>
<tr><td>13</td><td>ON</td><td>ON</td><td>OFF</td><td>ON</td></tr>
<tr><td>14</td><td>ON</td><td>ON</td><td>ON</td><td>OFF</td></tr>
<tr><td>15</td><td>ON</td><td>ON</td><td>ON</td><td>ON</td></tr>
</table>
(2) When MIx = 1–4 (multi-step position command 1–4), the terminal is level-triggered.
(3) When MIx = 36 (enable multi-step positioning teaching function), the terminal is edge-triggered.
(4) When MIx = 88 (multi-step position command confirmation), the terminal is rising edge-triggered.</td></tr>
<tr><td>89</td><td>Speed / position control mode switch
0: Speed mode
1: Position mode</td><td>OFF: Speed mode
ON: Position control mode</td></tr>
<tr><td>90</td><td>Position command source switch
0: Inputs from internal register
1: Inputs from external pulse</td><td>Refer to Pr.11-40
OFF: Input from internal register
ON: Input from external pulse-train</td></tr>
</table>

Settings	Functions	Descriptions
95	Multi speed limit 1	1. Set MI = 95–98 corresponding to the 15 step speed of Pr.04-00–04-14 to limit the speed. 2. If any of the MI is set as 1–4 (multi-step speed command), then none of the MI can be set as 95–98 for speed limit.
96	Multi speed limit 2	
97	Multi speed limit 3	
98	Multi speed limit 4	

02-09 External UP / DOWN Key Mode

Default: 0

Settings 0: By acceleration / deceleration time
1: Constant speed (Pr.02-10)

02-10 External Speed of the UP/ DOWN Key

Default: 0.001

Settings 0.001–1.000 Hz/ms

- Use when the multi-function input terminals are set to 19, 20 (Frequency UP / DOWN command). The frequency increases or decreases according to Pr.02-09 and Pr.02-10.
- When Pr.11-00 bit 7 = 1, the frequency is not saved. The Frequency command returns to zero when the drive stops, and the displayed frequency is 0.00 Hz. At this time, increasing or decreasing the Frequency command (F) by using the UP or DOWN key is valid only when the drive is running.
- When Pr.02-09 is set to 0:
  The increasing or decreasing Frequency command (F) operates according to the setting for acceleration or deceleration time (refer to Pr.01-12–01-19).

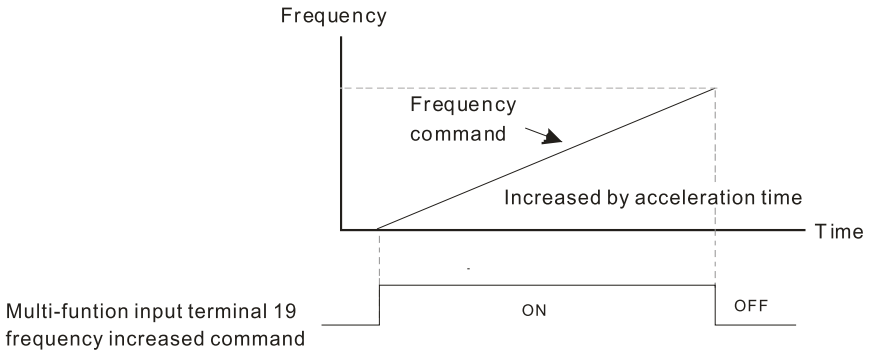

- When Pr.02-09 is set to 1:
  The increasing or decreasing Frequency command (F) operates according to the setting of Pr.02-10 (0.01–1.00 Hz/ms).

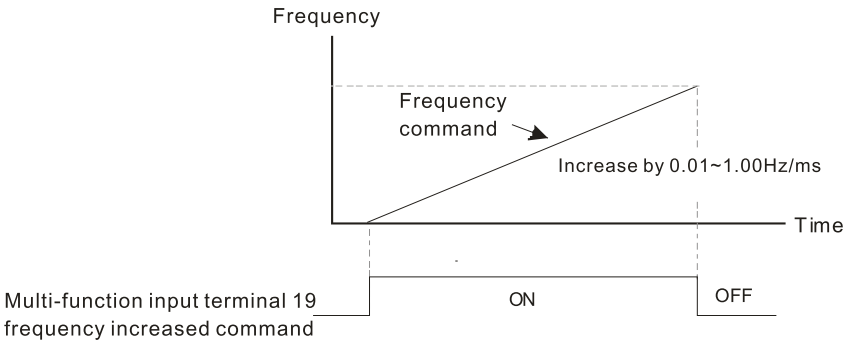

02-11 Multi-function Input Response Time

Default: 0.005

Settings 0.000–30.000 sec.

- Use this parameter to set the response time of the digital input terminals FWD, REV, and MI1–MI8.
- This function is to delay and confirm the digital input terminal signal. The time for delay is also the time for confirmation. The confirmation prevents interference that could cause error in the input to the digital terminals. But in the meanwhile, it delays the response time though confirmation improves accuracy.
- When using MI8 as encoder pulse feedback input, this parameter is be referred.

02-12 Multi-function Input Mode Selection

Default: 0000h

Settings 0000h–FFFFh (0: N.O.; 1: N.C.)

- The parameter setting is in hexadecimal.
- This parameter sets the status of the multi-function input signal (0: normally open; 1: normally closed) and it is not affected by the status of SINK / SOURCE.
- bit2–bit9 correspond to MI1–MI8, bit10–bit15 correspond to MI10–MI15 (Input terminal of I/O extension card).
- The default for bit 0 (MI1) is FWD terminal, and the default for bit 1 (MI2) is REV terminal. You cannot use this parameter to change the input mode when Pr.02-00 ≠ 0.
- You can change the terminal ON / OFF status through communications.
  For example: MI1 is set to 1 (multi-step speed command 1) and MI2 is set to 2 (multi-step speed command 2). Then the forward + second step speed command = $1001_2 = 9_{10}$.
- As long as Pr.02-12 = 9 is set through communications, there is no need to wire any multi-function terminal to run forward with the second step speed.

bit15	bit14	bit13	bit12	bit11	bit10	bit9	bit8	bit7	bit6	bit5	bit4	bit3	bit2	bit1	bit0
MI15	MI14	MI13	MI12	MI11	MI10	MI8	MI7	MI6	MI5	MI4	MI3	MI2	MI1		

- Use Pr.11-42 bit 1 to select whether FWD / REV terminal is controlled by Pr.02-12 bit 0 and bit 1.

02-13 Multi-function Output 1 (Relay1)

Default: 11

02-14 Multi-function Output 2 (Relay2)

Default: 1

02-16 Multi-function Output 3 (MO1)

Default: 66

02-17 Multi-function Output 4 (MO2)

02-36 Output Terminal of I/O Extension Card (MO10) or (RA10)

02-37 Output Terminal of I/O Extension Card (MO11) or (RA11)

02-38 Output Terminal of I/O Extension Card (RA12)

02-39 Output Terminal of I/O Extension Card (RA13)

02-40 Output Terminal of I/O Extension Card (RA14)

✓	**02-41**	Output Terminal of I/O Extension Card (RA15)
✓	**02-42**	Output Terminal of I/O Extension Card (MO16 Virtual Terminal)
✓	**02-43**	Output Terminal of I/O Extension Card (MO17 Virtual Terminal)
✓	**02-44**	Output Terminal of I/O Extension Card (MO18 Virtual Terminal)
✓	**02-45**	Output Terminal of I/O Extension Card (MO19 Virtual Terminal)
✓	**02-46**	Output Terminal of I/O Extension Card (MO20 Virtual Terminal)

Default: 0

Settings

0: No function

1: Indication during RUN

2: Operation speed reached

3: Desired frequency reached 1 (Pr.02-22)

4: Desired frequency reached 2 (Pr.02-24)

5: Zero speed (Frequency command)

6: Zero speed including STOP (Frequency command)

7: Over-torque 1 (Pr.06-06–06-08)

8: Over-torque 2 (Pr.06-09–06-11)

9: Drive is ready

10: Low voltage warning (Lv) (Pr.06-00)

11: Malfunction indication

12: Mechanical brake release (Pr.02-32)

13: Overheat warning (Pr.06-15)

14: Software brake signal indication (Pr.07-00)

15: PID feedback error (Pr.08-13, Pr.08-14)

16: Slip error (oSL)

17: Count value reached, does not return to 0 (Pr.02-20)

18: Count value reached, returns to 0 (Pr.02-19)

19: External interrupt B.B. input (Base Block)

20: Warning output

21: Over-voltage

22: Over-current stall prevention

23: Over-voltage stall prevention

24: Operation source

25: Forward command

26: Reverse command

27: Output when current ≥ Pr.02-33

28: Output when current < Pr.02-33

29: Output when frequency ≥ Pr.02-34

30: Output when frequency < Pr.02-34

31: Y-connection for the motor coil

32: Δ-connection for the motor coil

33: Zero speed (actual output frequency)
34: Zero speed including STOP (actual output frequency)
35: Error output selection 1 (Pr.06-23)
36: Error output selection 2 (Pr.06-24)
37: Error output selection 3 (Pr.06-25)
38: Error output selection 4 (Pr.06-26)
39: Position reached (Pr.11-65, Pr.11-66)
40: Speed reached (including Stop)
42: Crane function
43: Motor actual speed detection
44: Low current output (use with Pr.06-71–Pr.06-73)
45: UVW output electromagnetic valve switch
46: Master dEb output
47: Closed brake output
49: Homing action complete output
50: Output control for CANopen
51: Analog output control for RS-485 (InnerCOM / Modbus)
52: Output control for communication cards
65: Output control for both CANopen and RS-485
66: SO output logic A
67: Analog input level reached
68: SO output logic B
70: FAN warning detection output
75: Forward running status
76: Reverse running status

- Use this parameter to set the function of multi-function terminals.
- Pr.02-36–Pr.02-41 requires additional extension cards to display the parameters, the choices of optional cards are EMC-D42A and EMC-R6AA.
- The optional card EMC-D42A provides two output terminals, use with Pr.02-36–Pr.02-37.
- The optional card EMC-R6AA provides six output terminals, use with Pr.02-36–Pr.02-41.

Summary of function settings

Take the normally open contact (N.O.) for example, ON: contact is closed, OFF: contact is open

Settings	Functions	Descriptions
0	No Function	
1	Indication during RUN	Activates when the drive is not in STOP.
2	Operation speed reached	Activates when output frequency of the drive reaches the setting frequency.
3	Desired Frequency reached 1 (Pr.02-22)	Activates when the desired frequency (Pr.02-22) is reached
4	Desired Frequency reached 2 (Pr.02-24)	Activates when the desired frequency (Pr.02-24) is reached.

Settings	Functions	Descriptions
5	Zero Speed (frequency command)	Activates when frequency command = 0 (the drive must be in RUN status)
6	Zero speed, including STOP (Frequency command)	Activates when frequency command = 0 or stopped.
7	Over-torque 1	Activates when the drive detects over-torque. Pr.06-07 sets the over-torque detection level (motor 1), and Pr.06-08 sets the over-torque detection time (motor 1). Refer to Pr.06-06–06-08.
8	Over-torque 2	Activates when the drive detects over-torque. Pr.06-10 sets the over-torque detection level (motor 2), and Pr.06-11 sets the over-torque detection time (motor 2). Refer to Pr.06-09–06-11.
9	Drive is ready	Activates when the drive is ON and with no error detected.
10	Low voltage warning (Lv)	Activates when the DC bus voltage is too low. (refer to Pr.06-00 Low Voltage Level)
11	Malfunction indication	Activates when fault occurs (except Lv stop).
12	Mechanical brake release (Pr.02-32)	Activates when the drive runs after the set delayed time for Pr.02-32. This function must be used with DC brake function.
13	Overheat warning	Activates when IGBT or heat sink overheats; to prevent the drive from shutting down due to over-heating (refer to Pr.06-15).
14	Software brake signal indication	Activates when the soft brake function is ON. (refer to Pr.07-00)
15	PID feedback error	Activates when the PID feedback signal error is detected.
16	Slip error (oSL)	Activates when the slip error is detected.
17	Count value reached, does not return to 0 (Pr.02-20)	Activates when the drive executes external counter, this contact is active if the count value is equal to the setting value for Pr.02-20. This contact is not active when the setting value for Pr.02-20 > Pr.02-19.
18	Count value reached, returns to 0 (Pr.02-19)	Activates when the drive executes the external counter, this contact is active if the count value is equal to the setting value for Pr.02-19.
19	External interrupt B.B. input (Base Block)	Activates when external interrupt (B.B.) stop output occurs in the drive.
20	Warning output	Activates when a warning is detected.
21	Over-voltage	Activates when over-voltage is detected. (Refer to chapter 14 for the action level of over-voltage)
22	Over-current stall prevention	Activates when over-current stall prevention is detected.
23	Over-voltage stall prevention	Activates when over-voltage stall prevention is detected.

Settings	Functions	Descriptions
24	Operation source	Activates when the operation command is not controlled by external terminal. (Pr.00-21 ≠ 0)
25	Forward Command	Activates when the operation direction is forward.
26	Reverse Command	Activates when the operation direction is reverse.
27	Output when current ≥ Pr.02-33	Activates when current is ≥ Pr.02-33.
28	Output when current < Pr.02-33	Activates when current is < Pr.02-33
29	Output when frequency ≥ Pr.02-34	Activates when frequency is ≥ Pr.02-34.
30	Output when frequency < Pr.02-34	Activates when frequency is < Pr.02-34.
31	Y-connection for the motor coil	Activates when Pr.05-24=1, when frequency output is lower than Pr.05-23 minus 2 Hz, and the time is longer than Pr.05-25.
32	Δ-connection for the motor coil	Activates when Pr.05-24=1, when frequency output is higher than Pr.05-23 plus 2 Hz, and the time is longer than Pr.05-25.
33	Zero speed (actual output frequency)	Activates when the actual output frequency is 0. (the drive is in RUN mode)
34	Zero speed including stop (actual output frequency)	Activates when the actual output frequency is 0 or stopped.
35	Error output selection 1 (Pr.06-23)	Activates when Pr.06-23 is ON.
36	Error output selection 2 (Pr.06-24)	Activates when Pr.06-24 is ON.
37	Error output selection 3 (Pr.06-25)	Activates when Pr.06-25 is ON.
38	Error output selection 4 (Pr.06-26)	Activates when Pr.06-26 is ON.
39	Position reached (Pr.11-65, Pr.11-66)	Activates when the ~~PG~~ position control point reaches Pr.11-65, Pr.11-66.
40	Speed reached (including speed)	Activates when the output frequency reaches the setting frequency or stopped.
42	Crane function	Use this function with Pr.02-32, Pr.02-33, Pr.02-34, Pr.02-57 and Pr.02-58. Refer to the crane function examples below.
43	Actual motor speed detection	Activates when motor actual speed is less than Pr.02-47.
44	Low current output	This function needs to be used with Pr.06-71–Pr.06-73
45	UVW output electromagnetic valve	Use this function with external terminal input = 49 (drive enabled) and external terminal output = 45 (electromagnetic valve enabled),

Settings	Functions	Descriptions
	switch	and then the electromagnetic valve is ON or OFF according to the status of the drive. 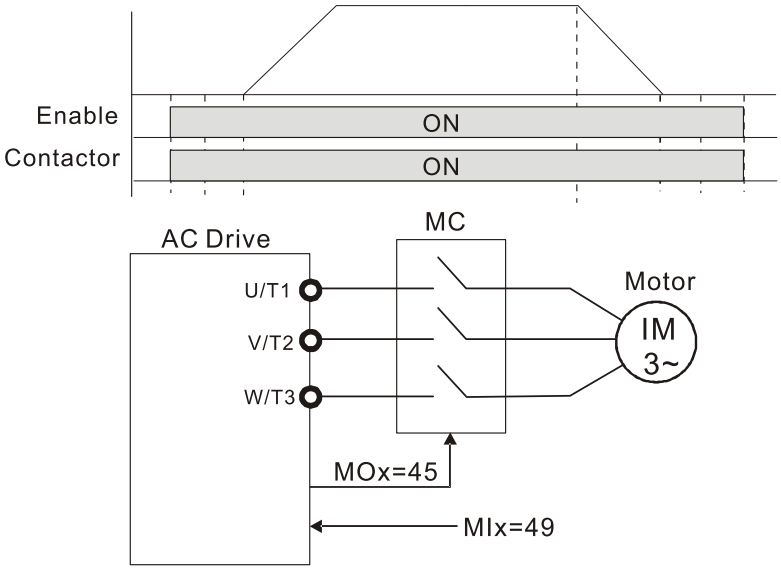
46	Master dEb output	When dEb rises at the master, MO sends a dEb signal to the slave. Output the message when the master triggers dEb. This ensures that the slave also triggers dEb. Then slave follows the deceleration time of the master to stop simultaneously with the master.
47	Closed brake output	When drive stops, and the frequency command < Pr.02-34, the contact of corresponding multi-function terminal is ON. The contact is OFF when the brake delay time exceeds Pr.02-32. 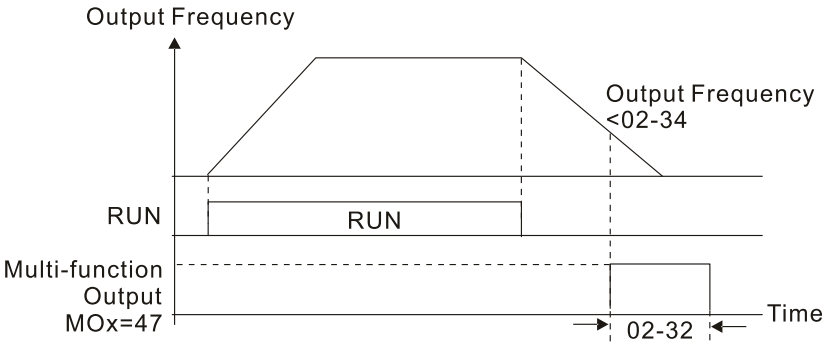
49	Homing action completed	Activates when homing action is completed.

<table>
<tr><th>Settings</th><th>Functions</th><th>Descriptions</th></tr>
<tr><td>50</td><td>Output control for CANopen</td><td>Control the multi-function output terminals through CANopen.
To control RY2, set Pr.02-14 = 50.
The mapping table of the CANopen DO is shown in the following table:
<table>
<tr><th>Physical Terminal</th><th>Setting of Related Parameters</th><th>Attribute</th><th>Corresponding Index</th></tr>
<tr><td>RY1</td><td>Pr.02-13 = 50</td><td>RW</td><td>The bit0 at 2026-41</td></tr>
<tr><td>RY2</td><td>Pr.02-14 = 50</td><td>RW</td><td>The bit1 at 2026-41</td></tr>
<tr><td>MO1</td><td>Pr.02-16 = 50</td><td>RW</td><td>The bit3 at 2026-41</td></tr>
<tr><td>MO2</td><td>Pr.02-17 = 50</td><td>RW</td><td>The bit4 at 2026-41</td></tr>
<tr><td>MO10</td><td rowspan="2">Pr.02-36 = 50</td><td rowspan="2">RW</td><td>The bit5 at 2026-41</td></tr>
<tr><td>RY10</td><td>The bit5 at 2026-41</td></tr>
<tr><td>MO11</td><td rowspan="2">Pr.02-37 = 50</td><td rowspan="2">RW</td><td>The bit6 at 2026-41</td></tr>
<tr><td>RY11</td><td>The bit6 at 2026-41</td></tr>
<tr><td>RY12</td><td>Pr.02-38 = 50</td><td>RW</td><td>The bit7 at 2026-41</td></tr>
<tr><td>RY13</td><td>Pr.02-39 = 50</td><td>RW</td><td>The bit8 at 2026-41</td></tr>
<tr><td>RY14</td><td>Pr.02-40 = 50</td><td>RW</td><td>The bit9 at 2026-41</td></tr>
<tr><td>RY15</td><td>Pr.02-41 = 50</td><td>RW</td><td>The bit10 at 2026-41</td></tr>
</table>
Refer to Section 15-3-5 for more information.</td></tr>
<tr><td>51</td><td>Analog output control for RS-485 interface (InnerCOM / Modbus)</td><td>For RS-485 interface (InnerCOM / Modbus) output.
<table>
<tr><th>Physical Terminal</th><th>Setting of Related Parameters</th><th>Attribute</th><th>Corresponding Index</th></tr>
<tr><td>RY1</td><td>Pr.02-13 = 51</td><td>RW</td><td>bit0 at 2640H</td></tr>
<tr><td>RY2</td><td>Pr.02-14 = 51</td><td>RW</td><td>bit1 at 2640H</td></tr>
<tr><td>MO1</td><td>Pr.02-16 = 51</td><td>RW</td><td>bit3 at 2640H</td></tr>
<tr><td>MO2</td><td>Pr.02-17 = 51</td><td>RW</td><td>bit4 at 2640H</td></tr>
<tr><td>MO10 or RA10</td><td>Pr.02-36 = 51</td><td>RW</td><td>bit5 at 2640H</td></tr>
<tr><td>MO11 or RA11</td><td>Pr.02-37 = 51</td><td>RW</td><td>bit6 at 2640H</td></tr>
<tr><td>RA12</td><td>Pr.02-38 = 51</td><td>RW</td><td>bit7 at 2640H</td></tr>
<tr><td>RA13</td><td>Pr.02-39 = 51</td><td>RW</td><td>bit8 at 2640H</td></tr>
<tr><td>RA14</td><td>Pr.02-40 = 51</td><td>RW</td><td>bit9 at 2640H</td></tr>
<tr><td>RA15</td><td>Pr.02-41 = 51</td><td>RW</td><td>bit10 at 2640H</td></tr>
</table></td></tr>
<tr><td>52</td><td>Output control for communication cards</td><td>Control the output through communication cards (CMC-EIP01, CMC-PN01 and CMC-DN01)
<table>
<tr><th>Physical Terminal</th><th>Setting of Related Parameters</th><th>Attribute</th><th>Corresponding Address</th></tr>
<tr><td>RY1</td><td>Pr.02-13 = 52</td><td>RW</td><td>The bit0 of 2640H</td></tr>
<tr><td>RY2</td><td>Pr.02-14 = 52</td><td>RW</td><td>The bit1 of 2640H</td></tr>
<tr><td>MO1</td><td>Pr.02-16 = 52</td><td>RW</td><td>The bit3 of 2640H</td></tr>
<tr><td>MO2</td><td>Pr.02-17 = 52</td><td>RW</td><td>The bit4 of 2640H</td></tr>
<tr><td>MO10 or RA10</td><td>Pr.02-36 = 51</td><td>RW</td><td>The bit5 of 2640H</td></tr>
<tr><td>MO11 or RA11</td><td>Pr.02-37 = 51</td><td>RW</td><td>The bit6 of 2640H</td></tr>
<tr><td>RA12</td><td>Pr.02-38 = 51</td><td>RW</td><td>The bit7 of 2640H</td></tr>
<tr><td>RA13</td><td>Pr.02-39 = 51</td><td>RW</td><td>The bit8 of 2640H</td></tr>
<tr><td>RA14</td><td>Pr.02-40 = 51</td><td>RW</td><td>The bit9 of 2640H</td></tr>
<tr><td>RA15</td><td>Pr.02-41= 51</td><td>RW</td><td>The bit10 of 2640H</td></tr>
</table></td></tr>
<tr><td>65</td><td>Output control for both CANopen and RS-485</td><td>To control output of CANopen and InnerCOM internal communication.</td></tr>
</table>

<table>
<tr><th>Settings</th><th>Functions</th><th>Descriptions</th></tr>
<tr><td>66</td><td>SO output logic A (N.O.)</td><td rowspan="2">
<table>
<tr><th rowspan="2">Status of the Drive</th><th colspan="2">Status of Safety Output</th></tr>
<tr><th>Status A (MOx = 66)</th><th>Status B (MOx = 68)</th></tr>
<tr><td>Normal</td><td>Broken circuit (Open)</td><td>Short circuit (Close)</td></tr>
<tr><td>STO</td><td>Short circuit (Close)</td><td>Broken circuit (Open)</td></tr>
<tr><td>STL1–STL3</td><td>Short circuit (Close)</td><td>Broken circuit (Open)</td></tr>
</table>
</td></tr>
<tr><td>68</td><td>SO output logic B (N.C.)</td></tr>
<tr><td>67</td><td>Analog input level reached</td><td>The multi-function output terminals operate when the analog input level is between the high level and the low level.
Pr.03-44: Select one of the analog input channels (AVI, ACI and AUI) to be compared.
Pr.03-45: The high level for the analog input, default is 50%.
Pr.03-46: The low level for the analog input, default is 10%.
If analog input > Pr.03-45, the multi-function output terminal operates. If analog input < Pr.03-46, the multi-function output terminal stops output.</td></tr>
<tr><td>70</td><td>Fan warning detection output</td><td>The terminal works when the internal fan warning activates</td></tr>
<tr><td>75</td><td>Forward running status</td><td rowspan="2">MOx = 75 activates (ON) when the drive runs in forward.
MOx = 76 activates (ON) when the drive runs in reverse.
When the drive is in stop status, MOx = 75 and MOx = 76 deactivates (OFF).
<table>
<tr><th rowspan="2"></th><th colspan="4">Multi-function output (MO) terminal</th></tr>
<tr><th>25
Forward command</th><th>26
Reverse command</th><th>75
Forward running status</th><th>76
Reverse running status</th></tr>
<tr><td>Drive runs in FWD</td><td>ON</td><td>OFF</td><td>ON</td><td>OFF</td></tr>
<tr><td>Drive runs in REV</td><td>OFF</td><td>ON</td><td>OFF</td><td>ON</td></tr>
<tr><td>Drive stops</td><td>The drive runs in forward and stops. The "FWD" light on the panel is in a steady ON status, and MO=25 remains ON.</td><td>The drive runs in reverse and stops. The "REV" light on the panel is in a steady ON status, and MO=26 remains ON.</td><td>OFF</td><td>OFF</td></tr>
<tr><td></td><td colspan="2">When the drive is in stop status, either MO=25 or MO=26 activates (ON).</td><td colspan="2">When the drive is in stop status, both MO=75 and MO=76 deactivate (OFF).</td></tr>
</table>
</td></tr>
<tr><td>76</td><td>Reverse running status</td></tr>
</table>

Example: Crane Application

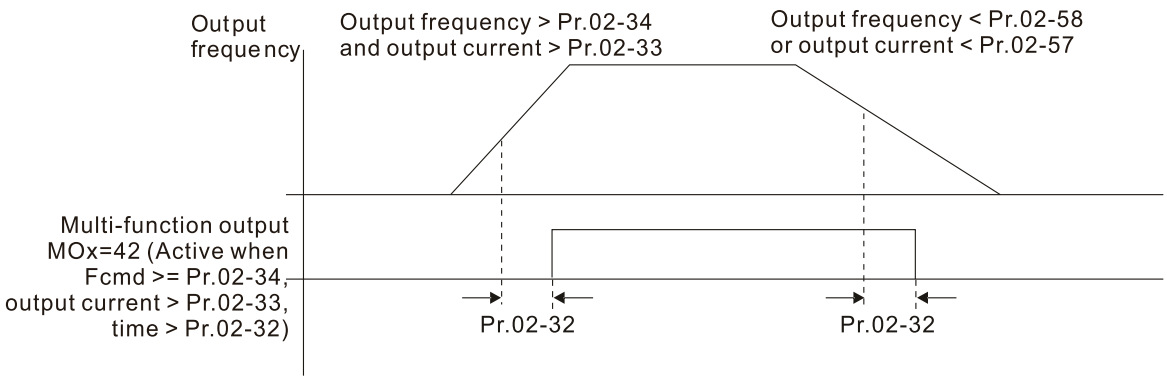

It is recommended to be used with Dwell function as shown in the following:

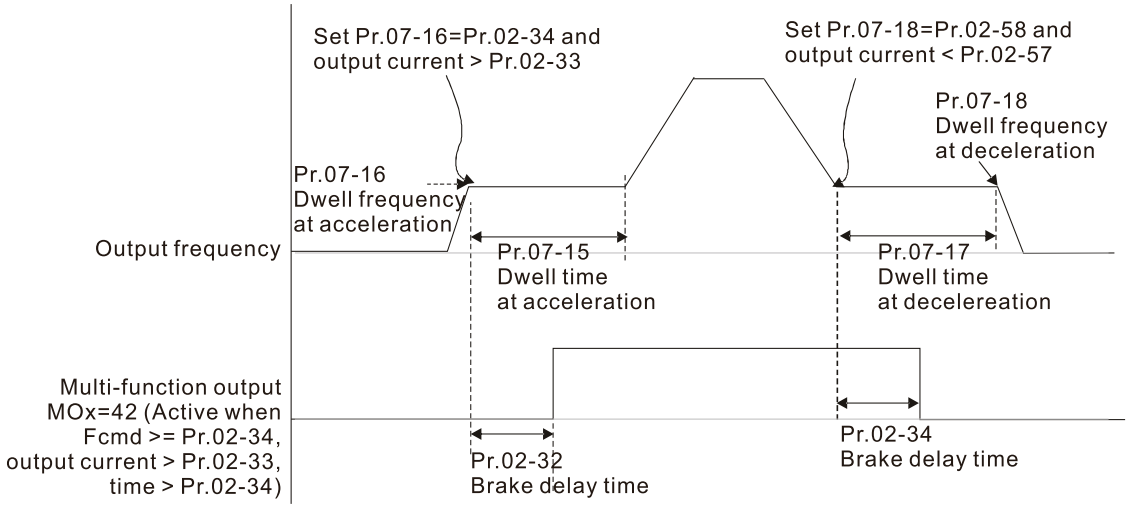

- When using the crane application and MOx = 42, Pr.02-34 must be larger than Pr.02-58; Pr.02-33 must be larger than Pr.02-57.
- Add Remote IO function to directly control drive's AO / DO and read current AI / DI status through the standard Modbus, the corresponding indexes of 26xx are as following:

	bit15	bit14	bit13	bit12	bit11	bit10	bit9	bit8	bit7	bit6	bit5	bit4	bit3	bit2	bit1	bit0
2600h	MI15	MI14	MI13	MI12	MI11	MI10	MI8	MI7	MI6	MI5	MI4	MI3	MI2	MI1	REV	FWD
2640h	-	-	-	-	-	MO15	MO14	MO13	MO12	MO11	MO10	MO2	MO1	-	RY2	RY1
2660h	AVI		-	-	-	-	-	-	-	-	-	-	-	-	-	-
2661h	ACI		-	-	-	-	-	-	-	-	-	-	-	-	-	-
2662h	AUI		-	-	-	-	-	-	-	-	-	-	-	-	-	-
266Ah	AI10		-	-	-	-	-	-	-	-	-	-	-	-	-	-
266Bh	AI11		-	-	-	-	-	-	-	-	-	-	-	-	-	-
26A0h	AFM1			-	-	-	-	-	-	-	-	-	-	-	-	-
26A1h	AFM2			-	-	-	-	-	-	-	-	-	-	-	-	-
26AAh	AO10			-	-	-	-	-	-	-	-	-	-	-	-	-
26ABh	AO11			-	-	-	-	-	-	-	-	-	-	-	-	-

In addition, the AI and DI value can be read directly, while DO and AO must be controlled by Modbus under corresponding parameter function. The related parameter definition is as following:

DO

Terminal	Pr. Setting	Indexes of Modbus direct control
RY1	Pr.02-13 = 51	The bit0 of 2640h
RY2	Pr.02-14 = 51	The bit1 of 2640h
MO1	Pr.02-16 = 51	The bit3 of 2640h
MO2	Pr.02-17 = 51	The bit4 of 2640h

Terminal	Pr. Setting	Indexes of Modbus direct control
MO10	Pr.02-36 = 51	The bit5 of 2640h
MO11	Pr.02-37 = 51	The bit6 of 2640h
MO12	Pr.02-38 = 51	The bit7 of 2640h
MO13	Pr.02-39 = 51	The bit8 of 2640h
MO14	Pr.02-40 = 51	The bit9 of 2640h
MO15	Pr.02-41 = 51	The bit10 of 2640h

AO

Terminal	Pr. Setting	Indexes of Modbus direct control
AFM1	Pr.03-20 = 21	The value of 26A0h
AFM2	Pr.03-23 = 21	The value of 26A1h
AFM10	Pr.14-12 = 21	The value of 26AAh
AFM11	Pr.14-13 = 21	The value of 26ABh

02-18 Multi-function Output Setting

Default: 0000h

Settings 0000h–FFFFh (0: N.O.; 1:N.C.)

This parameter is in hexadecimal.

This parameter is set by a bit. If a bit is 1, the corresponding multi-function output acts in an opposite way.

Example: Assume Pr.02-13 = 1 (indication when the drive is operating). If the output is positive, the bit is set to 0, and the Relay is ON when the drive runs and is OFF when the drive stops. On the contrary, if the output is negative, and the bit is set to 1, then the Relay is OFF when the drive runs and is ON when the drive stops.

bit15	bit14	bit13	bit12	bit11	bit10	bit9	bit8	bit7	bit6	bit5	bit4	bit3	bit2	bit1	bit0
MO20	MO19	MO18	MO17	MO16	MO15	MO14	MO13	MO12	MO11	MO10	MO2	MO1	Reserved	RY2	RY1

02-19 Terminal Counting Value Reached (returns to 0)

Default: 0

Settings 0–65500

You can set the input point for the counter using the multi-function terminal MI6 as a trigger terminal (set Pr.02-06 to 23). When counting is completed, the specified multi-function output terminal is activated (Pr.02-13, Pr.02-14, Pr.02-36, Pr.02-37 are set to 18). Pr.02-19 cannot be set to 0 at this time.

Example: When the displayed value is c5555, the drive count is 5,555 times. If the displayed value is c5555•, the actual count value is 55,550–55,559.

02-20 Preliminary Counting Value Reached (does not return to 0)

Default: 0

Settings 0–65500

When the counter value counts from 1 to reach this value, the corresponding multi-function output terminal is activated (Pr.02-13, Pr.02-14, Pr.02-36, Pr.02-37 are set to 17). You can use this parameter as the end of counting to make the drive run from the low speed to stop.

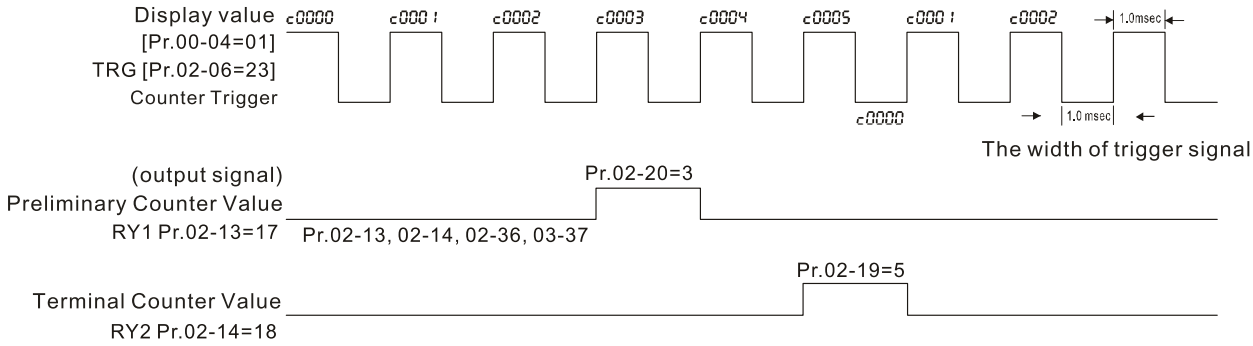

02-21 Digital Output Gain (DFM)

Default: 1

Settings 1–166

Sets the signal for the digital output terminals (DFM-DCM) and the digital frequency output (pulse, work period=50%). The output pulse per second = output frequency × Pr.02-21.

02-22 Desired Frequency Reached 1

Default: 60.0 / 50.00

Settings 0.00–599.00 Hz

02-23 The Width of the Desired Frequency Reached 1

Default: 2.00

Settings 0.00–599.00 Hz

02-24 Desired Frequency Reached 2

Default: 60.00 / 50.00

Settings 0.00–599.00 Hz

02-25 The Width of the Desired Frequency Reached 2

Default: 2.00

Settings 0.00–599.00 Hz

Once the output speed (frequency) reaches desired speed (frequency), if the corresponding multi-function output terminal is set to 3–4 (Pr.02-13, Pr.02-14, Pr.02-36 and Pr.02-37), this multi-function output terminal is “closed”.

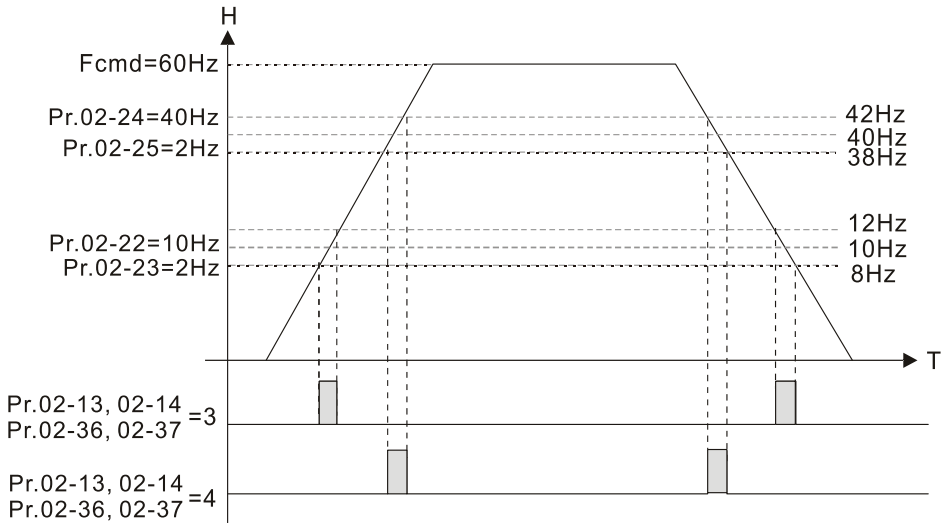

02-32 Brake Delay Time

Default: 0.000

Settings 0.000–65.000 sec.

When the AC motor drive runs after the setting delay time of Pr.02-32, the corresponding multi-function output terminal (12: mechanical brake release) is “closed”. This function must be used with DC brake.

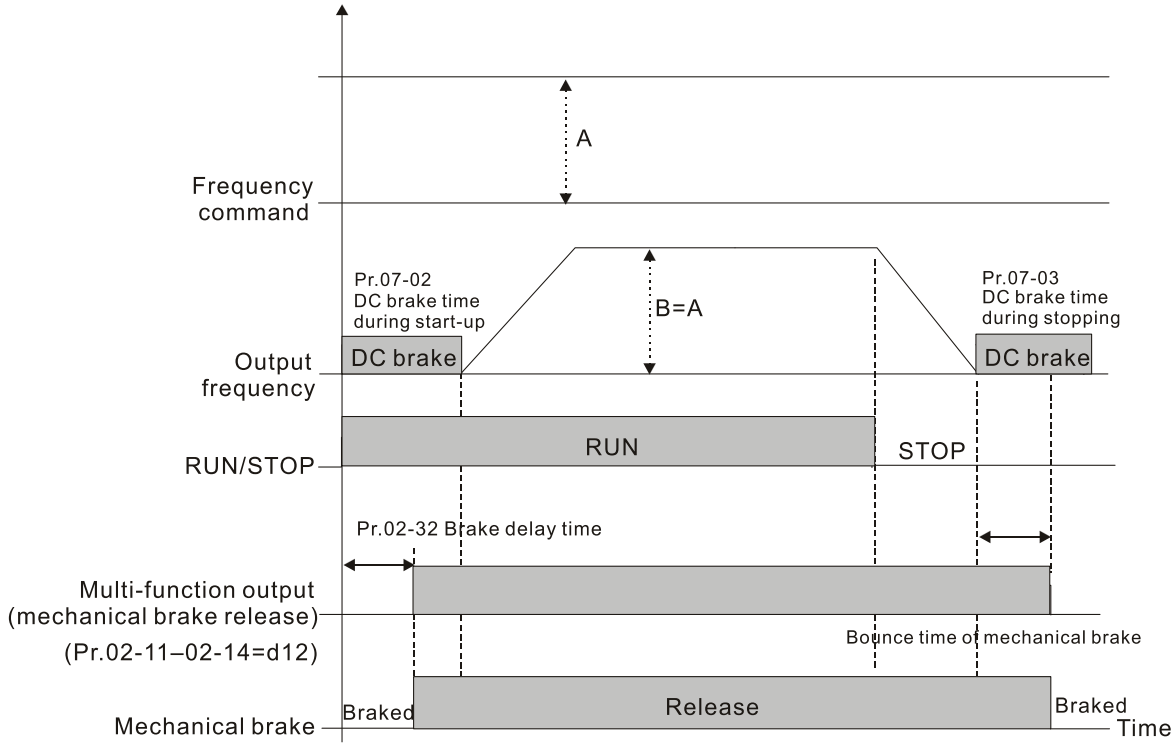

This parameter is invalid if it is used without DC brake. Refer to the following operation timing.

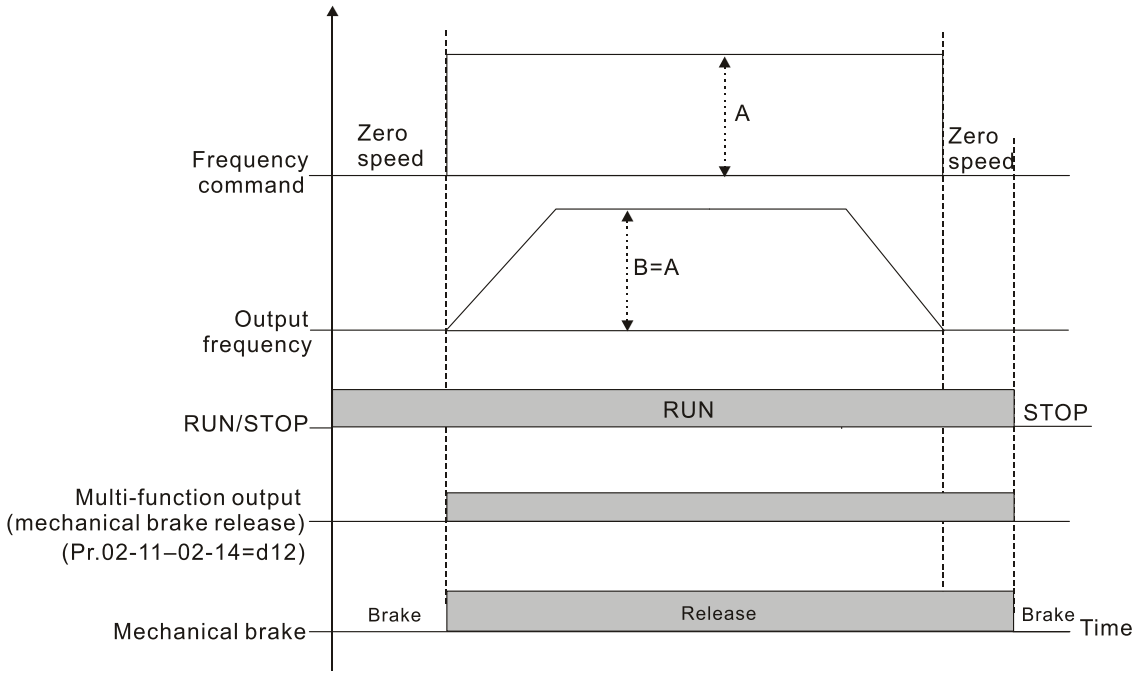

02-33 Output Current Level Setting for Multi-function Output Terminals

Default: 0

Settings 0–100%

- When the drive outputs current higher than or equal to Pr.02-33 (≥ Pr.02-33), the multi-function output parameters active (Pr.02-13, Pr.02-14, Pr.02-16, and Pr.02-17 are set to 27).
- When the drive outputs current lower than Pr.02-33 (< Pr.02-33), the multi-function output parameters active (Pr.02-13, Pr.02-14, Pr.02-16, and Pr.02-17 are set to 28).

02-34 Output Frequency Setting for Multi-function Output Terminals

Default: 3.00

Settings 0.00–599.00 Hz (Motor speed when using PG)

- When the drive outputs frequency higher than or equal to Pr.02-34 (actual output frequency H ≥ Pr.02-34), the multi-function terminals activate (Pr.02-13, Pr.02-14, Pr.02-16 and Pr.02-17 are set to 29).
- When the drive outputs frequency lower than Pr.02-34 (actual output frequency H < Pr.02-34), the multi-function terminals activate (Pr.02-13, Pr.02-14, Pr.02-16 and Pr.02-17 are set to 30).

02-35 External Operation Control Selection after Reset and Reboot

Default: 0

Settings 0: Disable
1: Drive runs if the RUN command remains after reset or re-boot

Setting 1: **The drive automatically executes the RUN command under the following circumstances, pay extra attention on this.**

- Status 1: After the drive is **powered on** and **the external terminal for RUN stays ON**, the drive runs.
- Status 2: After clearing a fault once a fault is detected and the external terminal for RUN stays ON, you can run the drive by pressing the RESET key.

02-47 Motor Zero-speed Level

Default: 0

Settings 0–65535 rpm

- Use this parameter with the multi-function output terminals (set to 43). The motor needs to install encoder to feedback the actual rotating speed and use with PG card.
- Use this parameter to set the level of motor at zero-speed. When the speed is lower than this setting, the corresponding multi-function output terminal that is set to 43 is ON (default), as shown below:

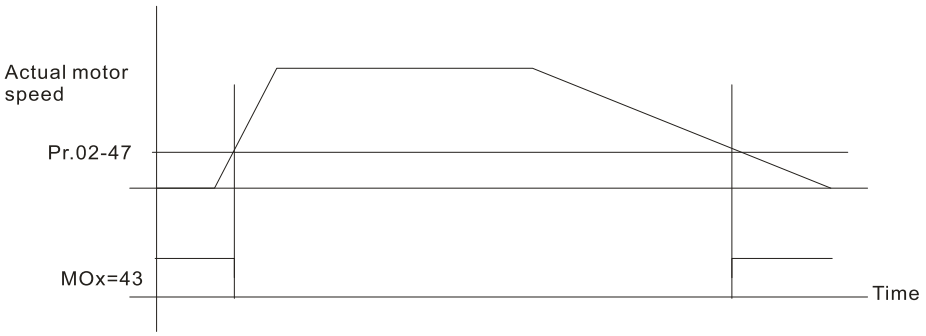

02-48 Maximum Frequency of Resolution Switch

Default: 60.00

Settings 0.00–599.00 Hz

02-49 Switch Delay Time of Maximum Output Frequency

Default: 0.000

Settings 0.000–65.000 sec.

Use this parameter to improve unstable speed or unstable position due to insufficient analog resolution. This function needs to be used with the external terminal (setting to 43). After setting this parameter, you also need to adjust the analog output resolution of the controller so as to work with the parameter function.

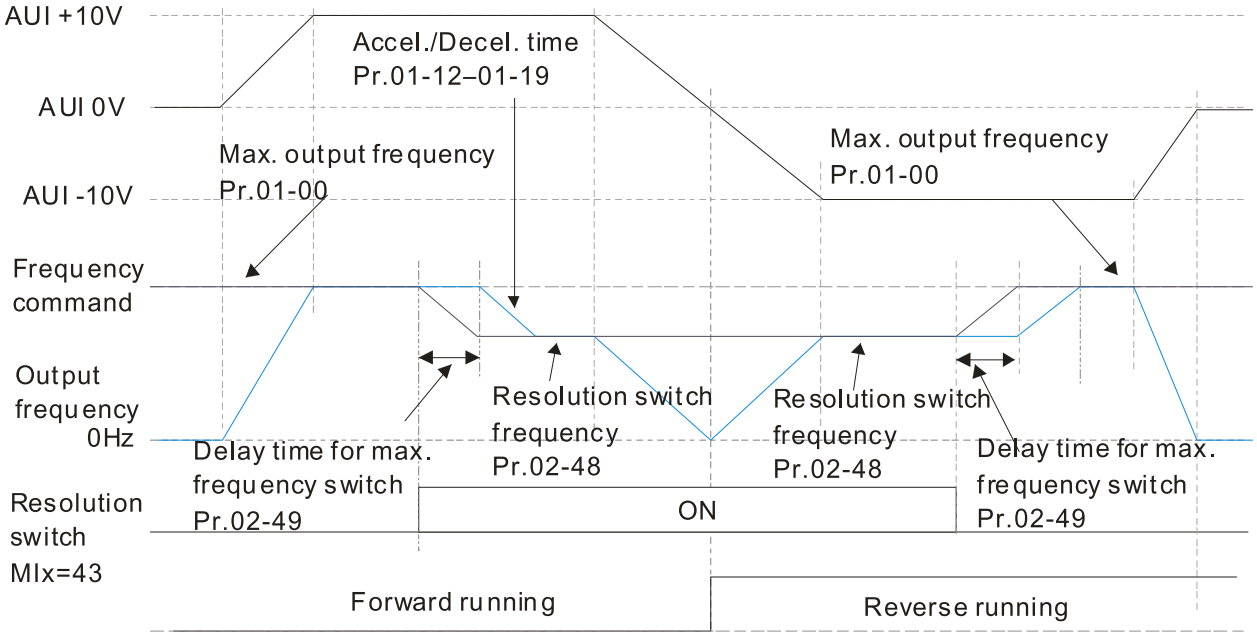

02-50 Display the Status of Multi-function Input Terminal

Default: Read only

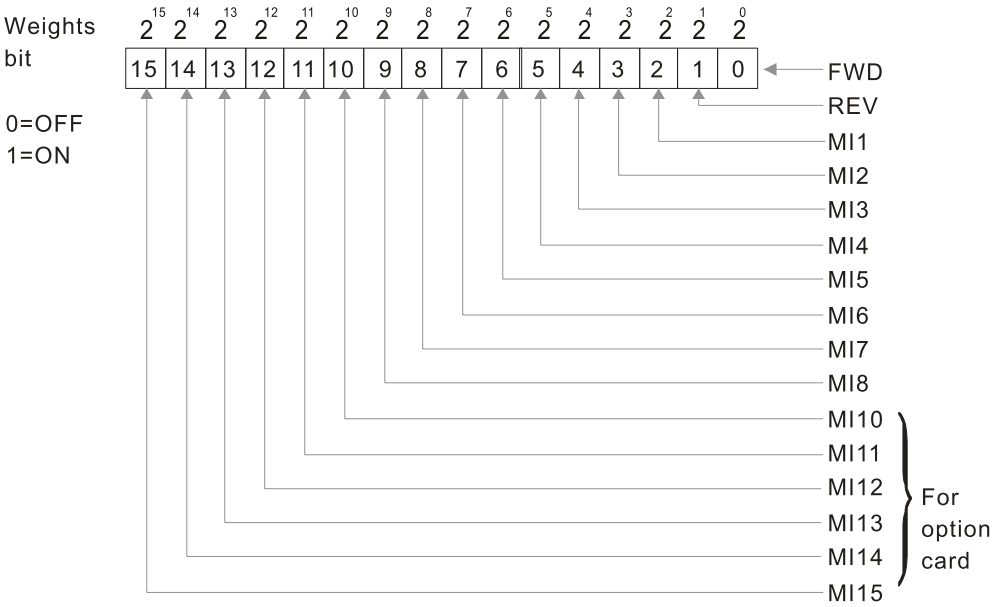

Example:

When Pr.02-50 displays 0034h (hex) (that is, the value is 110100 (binary), it means that MI1, MI3 and MI4 are ON.

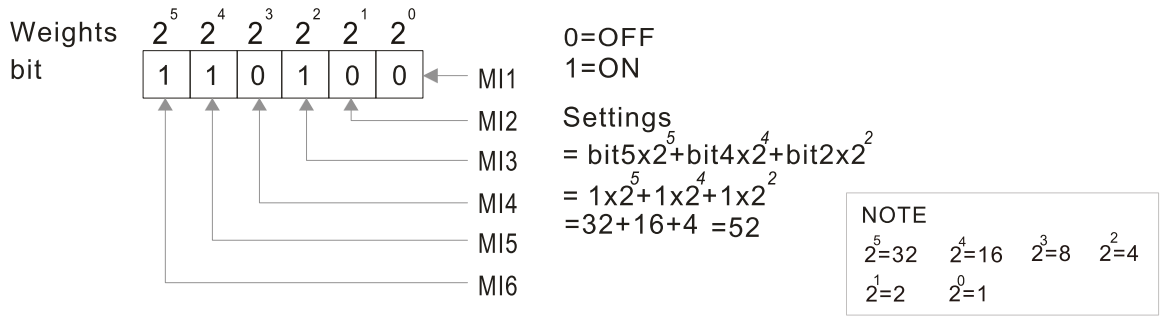

02-51 Display the Status of Multi-function Output Terminal

Default: Read only

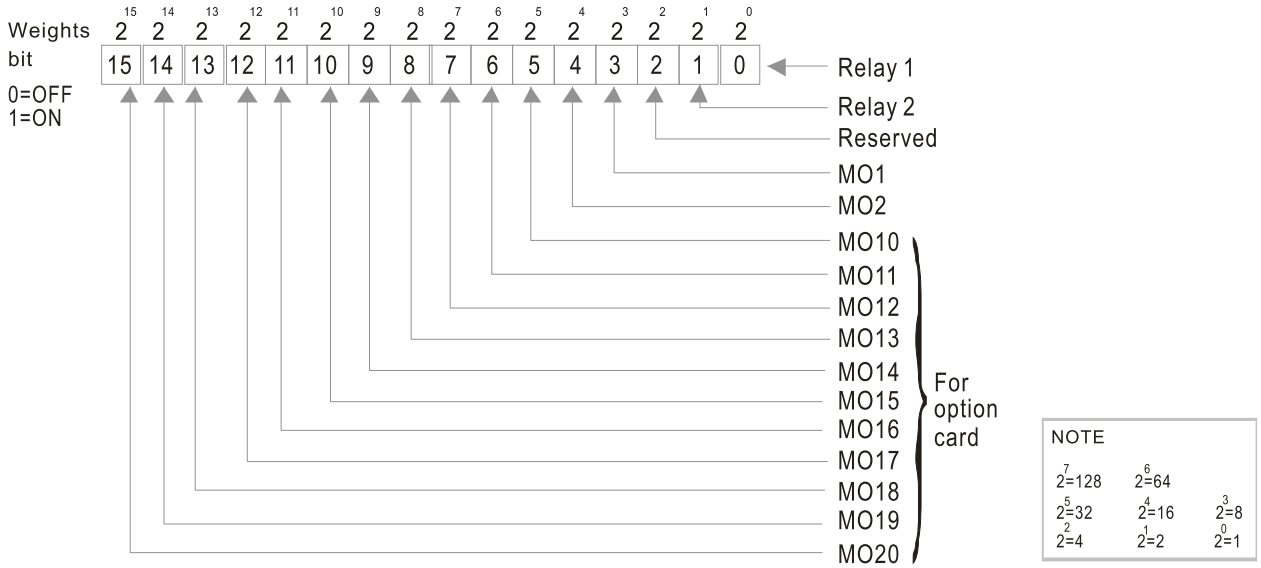

Example:

When Pr.02-51 displays 0023h (hex) (that is, the value is 100011 (binary)), it means that RY1, RY2, and MO1 are ON.

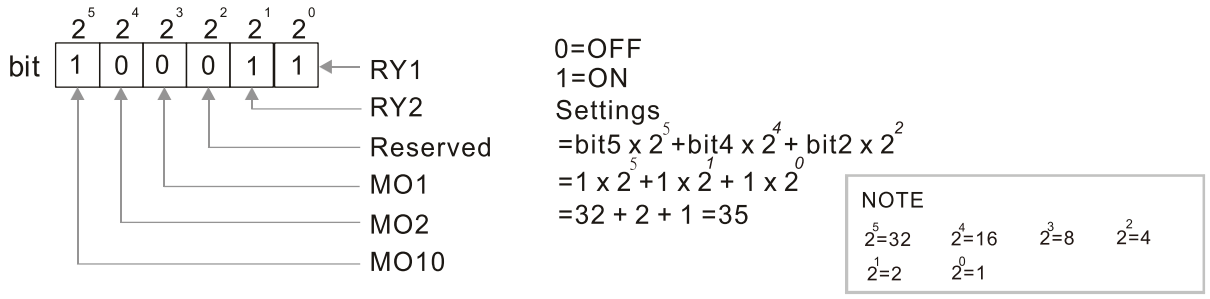

02-52 Display the External Multi-function Input Terminals Used by PLC

Default: Read only

Pr.02-52 displays the external multi-function input terminals that used by PLC.

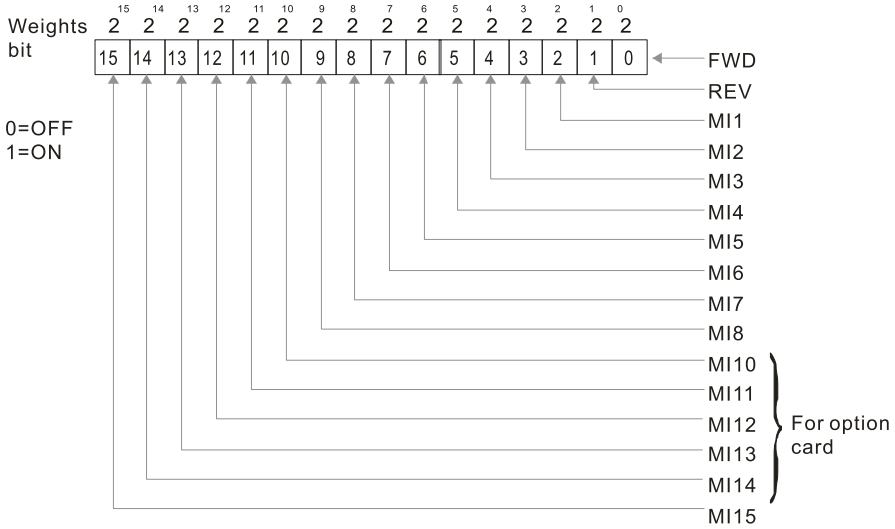

Example:

When Pr.02-52 displays 0034h (hex) (that is, the value is 110100 (binary)), it means that MI1, MI3 and MI4 are used by PLC.

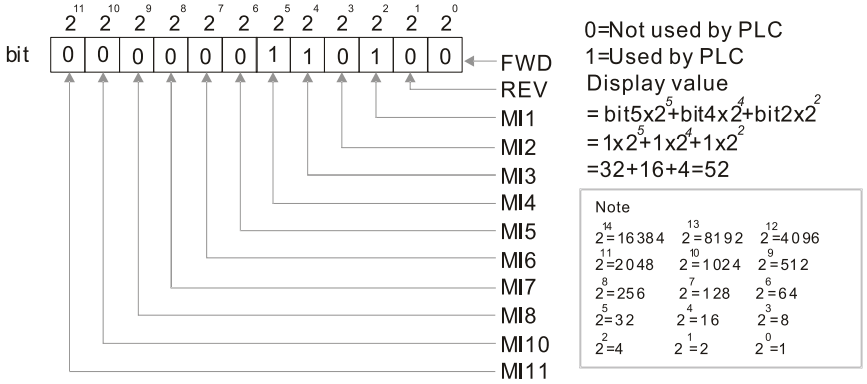

02-53 Display the External Multi-function Output Terminals Used by PLC

Default: Read only

Pr.02-53 displays the external multi-function output terminal that used by PLC.

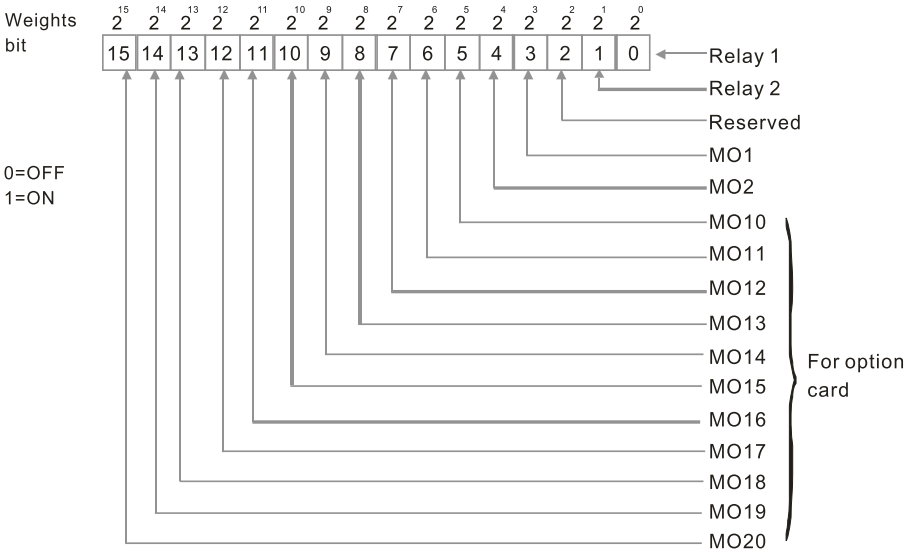

Example:

When Pr.02-53 displays 0003h (hex) (that is, the value is 0011 (binary)), it means that RY1 and RY2 are used by PLC.

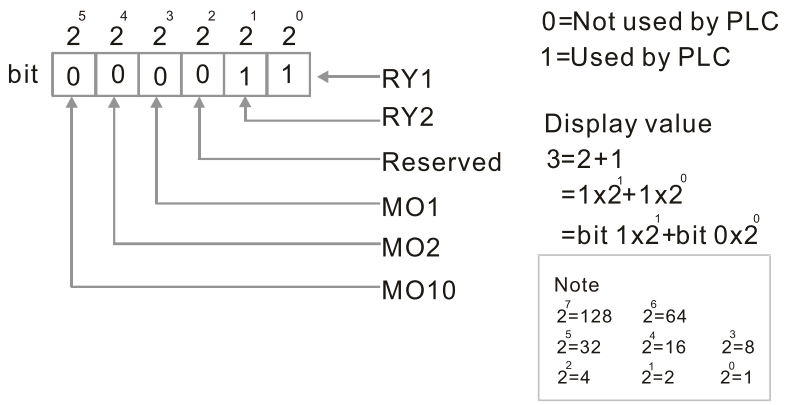

02-54 Display the Frequency Command Executed by External Terminal

Default: Read only

Settings 0.00–599.00 Hz (Read only)

When you set the source of the Frequency command as the external terminal, if Lv or Fault occurs, the external terminal Frequency command is saved in this parameter.

02-56 Brake Release Check Time

Default: 0.000 sec.

Settings 0.000–65.000 sec.

Use Pr.02-56 with MIx = 55 (brake release check). Sets for the time difference of mechanical brake delay time and actual brake operation.

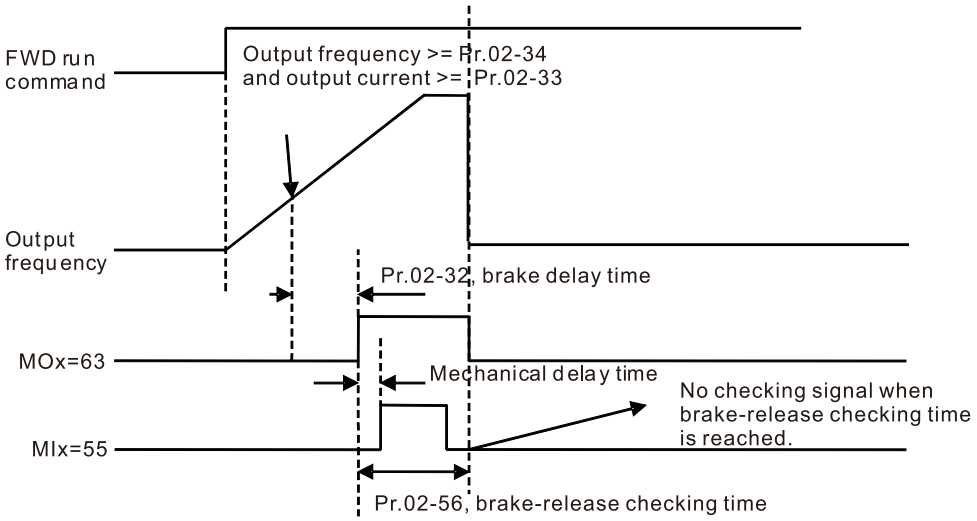

02-57 Multi-function output terminal: Function 42: Brake Current Check Point

Default: 0

Settings 0–100%

02-58 Multi-function output terminal (Function 42) : Brake Frequency Check Point

Default: 0.00

Settings 0.00–599.00 Hz

- Pr.02-32, Pr.02-33, Pr.02-34, Pr.02-57 and Pr.02-58 can be applied on setting up cranes. (Choose crane action #42 to set up multi-function output Pr.02-13, Pr.02-14, Pr.02-16 and Pr.02-17).
- When the drive outputs current higher than the setting for Pr.02-33 Pivot Point of the Current (≥ Pr.02-33), and outputs frequency higher than the setting for Pr.02-34 Pivot Point of the Frequency (≥ Pr.02-34), multi-function output Pr.02-13, Pr.02-14, Pr.02-16 and Pr.02-17 are set to 42 after the delay time setting for Pr.02-32.
- When the Pivot Point of the Current 's setting Pr.02-57 ≠ 0 and when the output current of the drive is lower than the setting for Pr.02-57 (< Pr.02-57), or the output frequency is lower than the setting for Pr.02-58 (< Pr.02-58), disable the setting #42 of the multi-function output Pr.02-13, Pr.02-14, Pr.02-16 and Pr.02-17
- When Pr.02-57 = 0, the output current is lower than the setting for Pr.02-33 Pivot Point of the current (< Pr.02-33), or the output frequency is lower than the setting for Pr.02-58 (< Pr.02-58), disable the setting of #42 of the multi-function output Pr.02-13, Pr.02-14, Pr.02-16 and Pr.02-17.
- When using crane application, and MOx = 42, Pr.02-34 must be larger than Pr.02-58; and Pr.02-33 must be larger than Pr.02-57.

02-59 Reverse Release Current Level

Default: 0

Settings 0–100%

02-60 Reverse Brake Current Level

Default: 0

Settings 0–100%

02-61 Reverse Release Frequency Level

Default: 3.00

Settings 0.00–599.00 Hz

02-62 Reverse Brake Frequency Level

Default: 0.00

Settings 0.00–599.00 Hz

- Refer to the sequence diagrams for MOx = 42 Crane Action.

02-63 Frequency Reached Detection Amplitude

Default: 0.00

Settings 0.00–599.00 Hz

02-64 Light Load Acceleration (LLACC) Mode

Default: 0

Settings 0: Disable
1: Enable

02-65 Light Load Acceleration (LLACC) Active Frequency

Default: 0.00

Settings 0.00–599.00 Hz

02-66 Light Load Acceleration (LLACC) Forward Active Current Level

Default: 0

Settings 0–100%

02-67 Light Load Acceleration (LLACC) Reverse Action Current Level

Default: 0

Settings 0–100%

02-68 Light Load Acceleration (LLACC) Delay Time

Default: 0.000

Settings 0.000–60.000 sec.

02-69 Light Load Acceleration (LLACC) Target Frequency

Default: 0.00

Settings 0.00–60.00 Hz

- Set the frequency higher than Pr.02-65 (LLACC frequency), when the output frequency reaches the set frequency, and the current level is lower than Pr.02-66 (LLACC forward active current level), the light load acceleration counter starts to count to Pr.02-68 (LLACC delay time). During the counting, when all the above conditions are satisfied and the counting time reaches Pr.02-68, the drive starts to accelerate to the target frequency (Pr.02-69).
- During the counting, all the conditions need to be met, or LLACC disables automatically until the next operation command is given.
- When setting acceleration, if the accelerating speed is larger than the primary maximum operation frequency, you need to modify the maximum operation frequency (Pr.01-00 and Pr.01-01) and calculate the first acceleration time.

  The calculation formula:

  Pr.01-12 before the setting = primary setting of Pr.01-12 × Pr.01-00 after the setting ÷ Pr.01-00 before the setting

  For example: assume that the maximum operation frequency (Pr.01-00) before enabling LLACC = Pr.01-00 = 60 Hz, and the first acceleration time (Pr.01-12) is 10 sec. if the speed after LLACC is 90 Hz, then the first acceleration time is: 10 × 90 ÷ 60 = 15 sec.

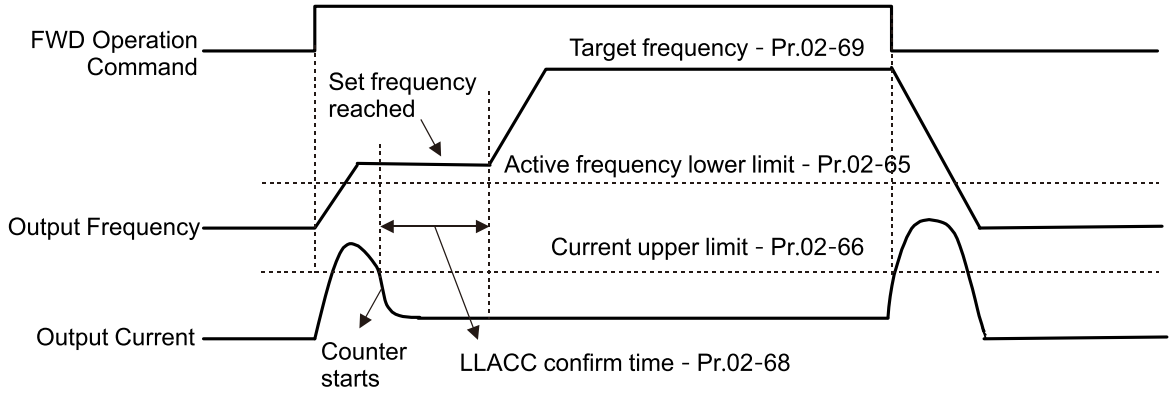

02-70 IO Card Types

Default: Read only

Settings Read only
1: EMC-BPS01
4: EMC-D611A
5: EMC-D42A
6: EMC-R6AA
11: EMC-A22A

02-70 DFM Output Selection

Default: 0

Settings 0: Use frequency with speed control as DFM output frequency
1: Use frequency with system acceleration / deceleration as DFM output frequency

02-74 Internal / External Multi-function Input Terminal Selection

Default: 0000h

Settings 0000–FFFFh

Selects the terminals MI1–MI15 to be internal terminals or external terminals. When the MIx is set as internal terminal, the corresponding external terminal function is disabled.

To activate internal terminals via Pr.02-75 setting.

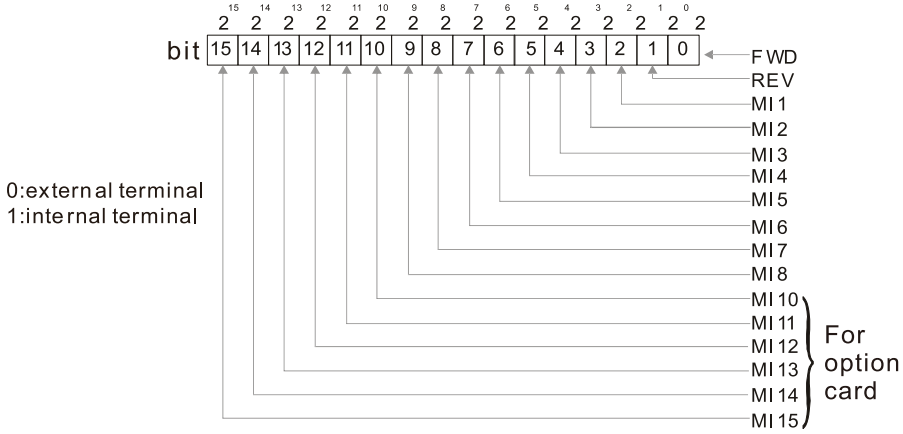

Setting method: convert the binary 12bit number to hexadecimal number for input.

Example: if the MI1, MI3, MI4 are virtual terminals, Pr.02-74 = 34h.

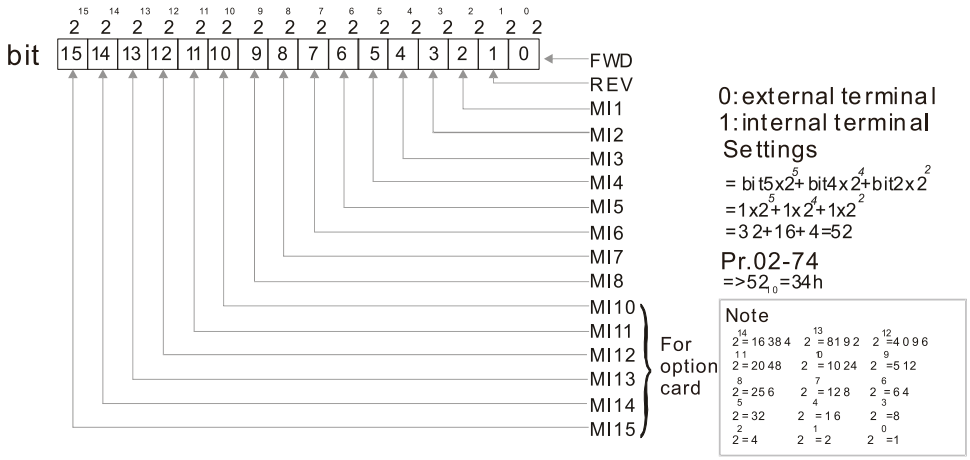

02-75 Internal Multi-function Input Terminal Contact Status

Default: 0000h

Settings 0000–FFFFh

Sets the internal terminal action (ON / OFF) through digital keypad, communication or PLC.

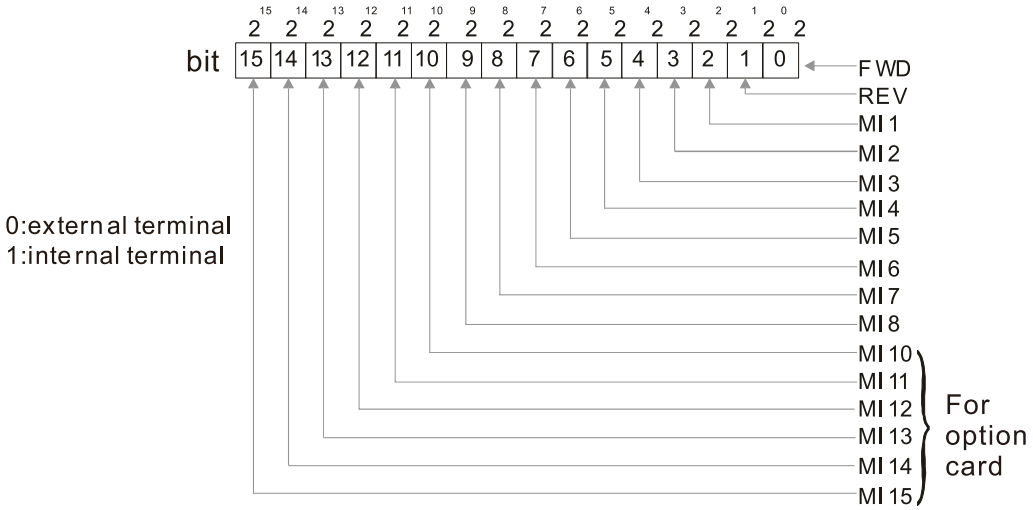

Example: Set Pr.02-75 = 34h to activate MI1, MI3 and MI4.

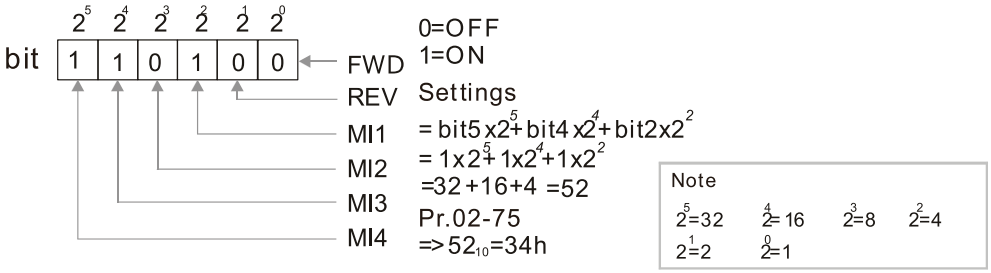

The Local / Remote options on the digital keypad have the lowest priority.

When the PLC uses the entity DI, the corresponded function of original DI can still be triggered through virtual terminals.

Pr.02-74 and Pr.02-75 can both be changed during RUN.

Pr.02-74 and Pr.02-75 are saved after power off.

You can choose N.O. (Pr.02-12 bit = 0) or N.C. (Pr.02-12 bit = 1) through the Pr.02-12 MI mode to trigger the virtual terminals.

02-76 MO Indication Delay Time during RUN

Default: 0.00

Settings 0.00–655.35 sec.

When the AC motor drive runs, MO=1 (Indication during RUN) is ON. When the drive stops, the terminal status changes from ON to OFF after the delay time of Pr.02-76. If the AC motor drive restarts during the delay time, the terminal status remains ON.

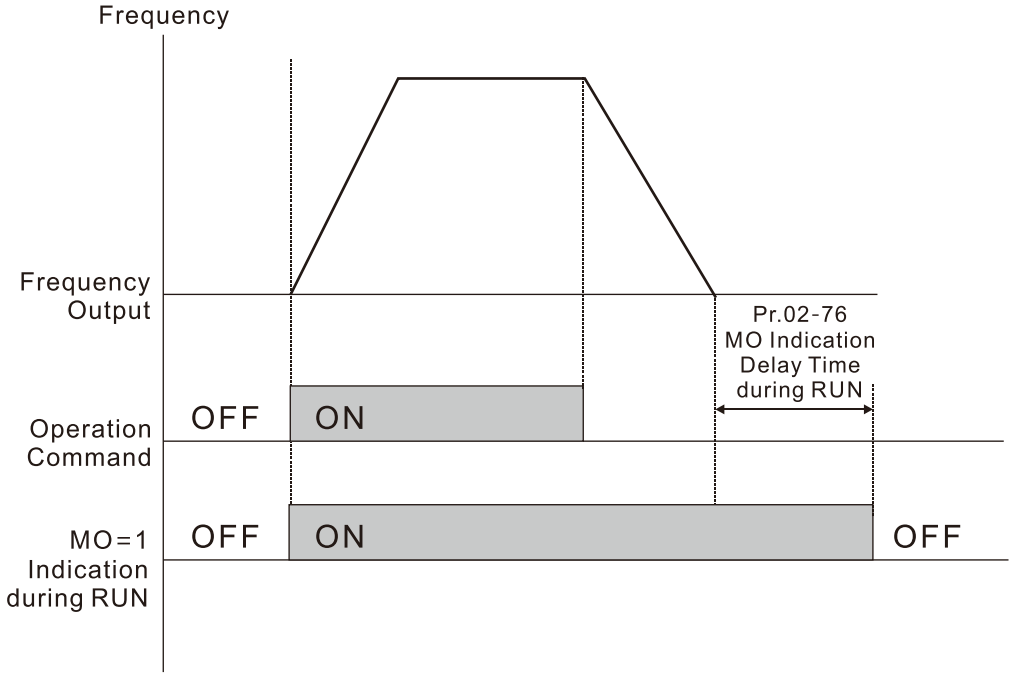

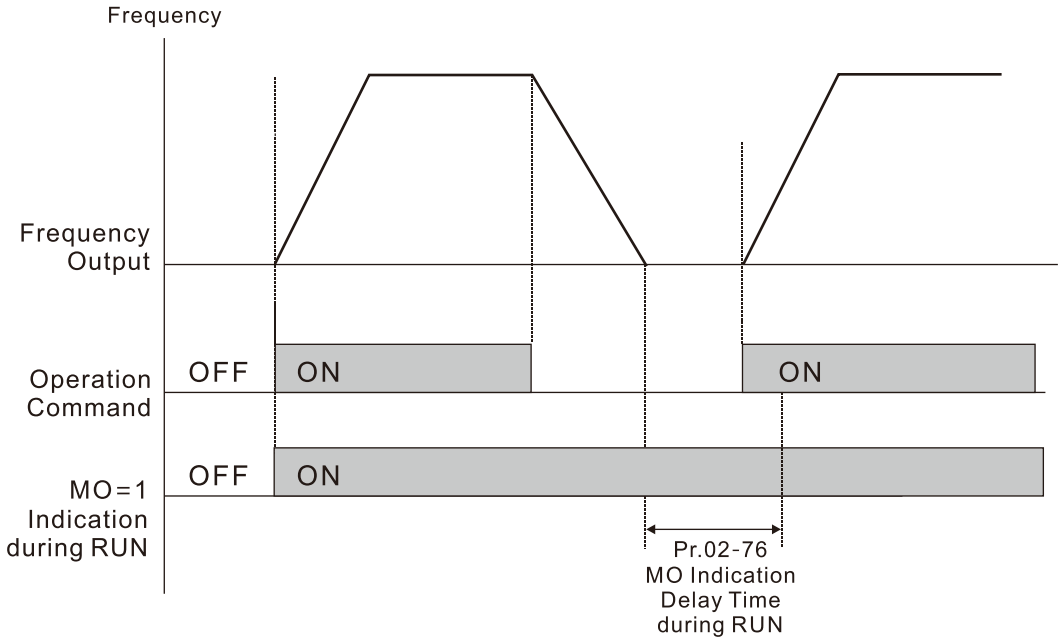

02-77 Frequency Reached Error Accumulated Time

Default: 0.500

Settings 0.000–65.535 sec.

Refer to description of Pr.11-42 bit8.

03 Analog Input / Output Parameter

✓ You can set this parameter during operation.

✓ 03-01 AVI Analog Input Selection

Default: 1

✓ 03-01 ACI Analog Input Selection

Default: 0

✓ 03-02 AUI Analog Input Selection

Default: 0

Settings

0: No function

1: Frequency command (speed limit under torque control mode)

2: Torque command (torque limit under speed control mode)

3: Torque compensation command

4: PID target value

5: PID feedback signal

6: Thermistor (PTC / KTY-84) input value

7: Positive torque limit

8: Negative torque limit

9: Regenerative torque limit

10: Positive / negative torque limit

11: PT100 thermistor input value

12: Auxiliary frequency input

13: PID compensation value

- When you use analog input as the PID reference target input, you must set Pr.00-20 to 2 (external analog input).
  Setting method 1: Pr.03-00–03-02 set 1 as Frequency command.
  Setting method 2: Pr.03-00–03-02 set 4 as PID reference target input.
  If the setting value 1 and setting value 4 exist at the same time, the AVI input has highest priority to become the PID reference target input value.
- When you use analog input as the PID compensation value, you must set Pr.08-16 to 1 (source of PID compensation value is analog input). You can see the compensation value with Pr.08-17.
- When using the Frequency command or TQC speed limit, the corresponding value for 0–±10 V / 4–20 mA is 0–maximum operation frequency (Pr.01-00).
- When using the torque command or torque limit, the corresponding value for 0–±10 V / 4–20 mA is 0–maximum output torque (Pr.11-27).
- When using the torque compensation, the corresponding value for 0–±10 V / 4–20m A is 0–the motor's rated torque.
- The analog input AVI / ACI (use with Switch terminal to switch SW2 to 0–10 V) supports KTY84. The AUI does not support this function.
- When you use KTY84, you can only choose either AVI or ACI at the same time. The AVI is prior to ACI.
- If the settings for Pr.03-00–Pr.03-02 are the same, the AVI input has highest priority.

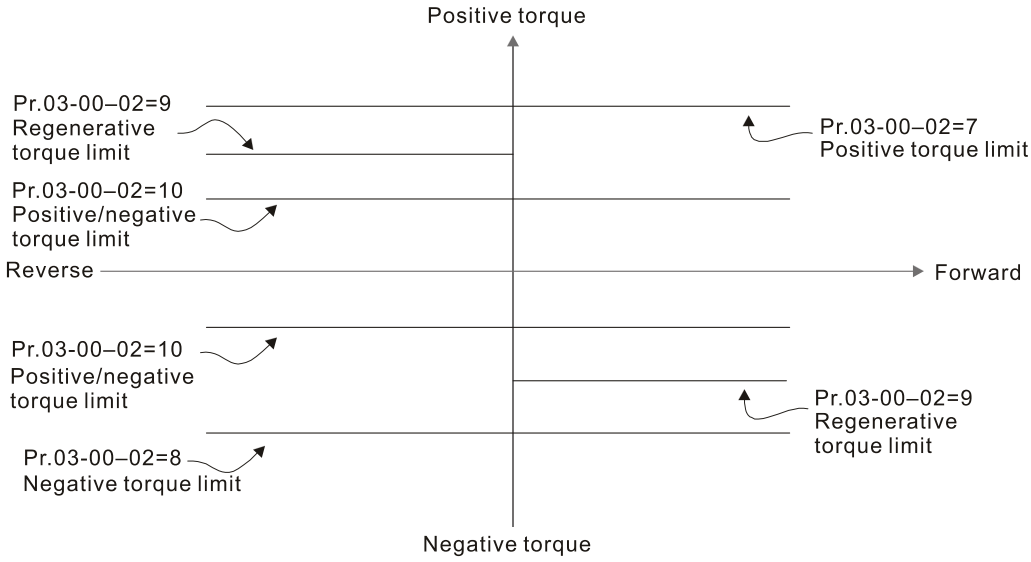

03-03 AVI Analog Input Bias

Default: 0.0

Settings -100.0–100.0%

Sets the corresponding AVI voltage for the external analog input 0.

03-04 ACI Analog Input Bias

Default: 0.0

Settings -100.0–100.0%

Sets the corresponding ACI current for the external analog input 0.

03-05 AUI Analog Voltage Input Bias

Default: 0.0

Settings -100.0–100.0%

Sets the corresponding AUI voltage for the external analog input 0.

The corresponding external input voltage / current signal and the set frequency is 0–10 V (4–20 mA) corresponds to 0–maximum frequency.

03-07 AVI Positive / Negative Bias Mode
03-08 ACI Positive / Negative Bias Mode
03-09 AUI Positive / Negative Bias Mode

Default: 0

Settings 0: No bias
1: Lower than or equal to bias
2: Greater than or equal to bias
3: The absolute value of the bias voltage while serving as the center
4: Serve bias as the center

Using negative bias to set the frequency greatly reduces the noise interference. In a noisy environment, do NOT use signals less than 1 V to set the drive's operation frequency.

In the diagram below: Black line: Curve with no bias. Gray line: curve with bias

Diagram 1

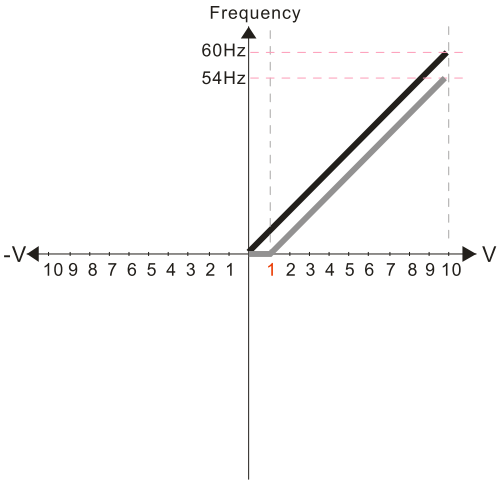

Pr.03-03=10%

Pr.03-07~03-09 (Positive/Negative Bias Mode)

0: No bias
1: Lower than or equal to bias
2: Greater than or equal to bias
3: The absolute value of the bias voltage while serving as the center
4: Serve bias as the center

Pr.03-10 (Analog Frequency Command for Reverse Run)

0: Negative frequency is not valid. Forward and reverse run is controlled by digital keypad or external terminal.
1: Neagtive frequency is valid. Positive frequency = forward run; negative frequency = reverse run. Direction can not be switched by digital keypad or external teriminal control.

Pr.03-11 Analog Input Gain (AVI)= 100%

Diagram 2

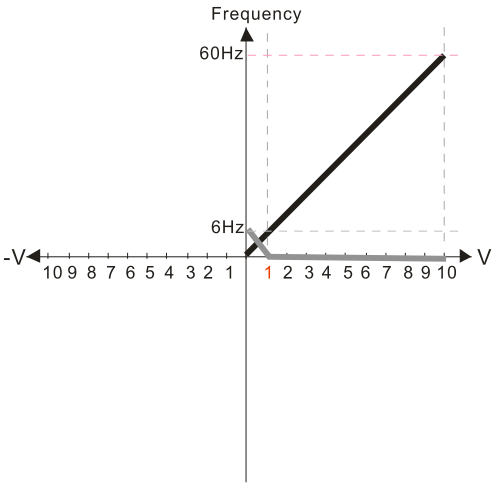

Pr.03-03=10%

Pr.03-07~03-09 (Positive/Negative Bias Mode)

0: No bias
1: Lower than or equal to bias
2: Greater than or equal to bias
3: The absolute value of the bias voltage while serving as the center
4: Serve bias as the center

Pr.03-10 (Analog Frequency Command for Reverse Run)

0: Negative frequency is not valid. Forward and reverse run is controlled by digital keypad or external terminal.
1: Neagtive frequency is valid. Positive frequency = forward run; negative frequency = reverse run. Direction can not be switched by digital keypad or external teriminal control.

Pr.03-11Analog Input Gain (AVI)=100%

Diagram 3

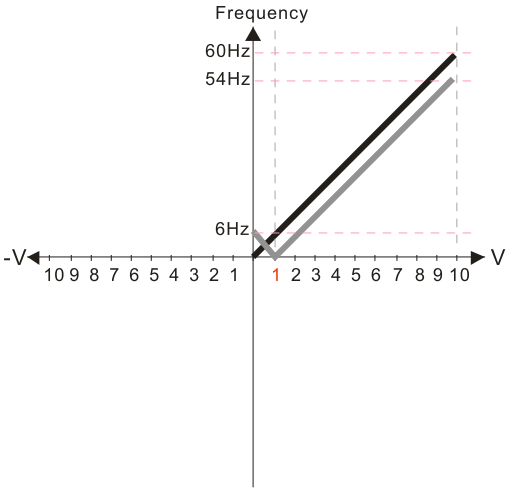

Pr.03-03=10%

Pr.03-07~03-09 (Positive/Negative Bias Mode)

0: No bias
1: Lower than or equal to bias
2: Greater than or equal to bias
3: The absolute value of the bias voltage while serving as the center
4: Serve bias as the center

Pr.03-10 (Analog Frequency Command for Reverse Run)

0: Negative frequency is not valid. Forward and reverse run is controlled by digital keypad or external terminal.
1: Neagtive frequency is valid. Positive frequency = forward run; negative frequency = reverse run. Direction can not be switched by digital keypad or external teriminal control.

Pr.03-11 Analog Input Gain (AVI) = 100%

Diagram 4

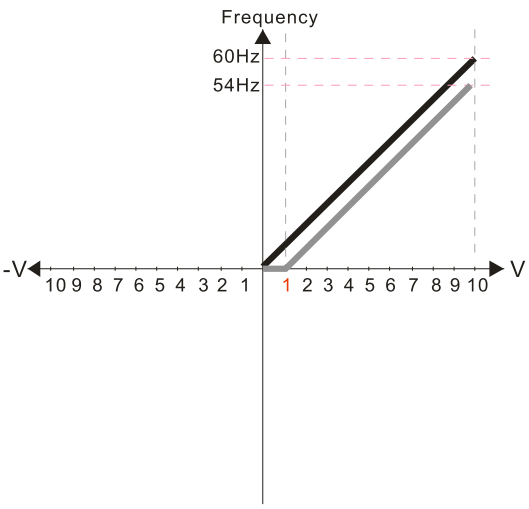

Pr.03-03=10%

Pr.03-07~03-09 (Positive/Negative Bias Mode)

0: No bias
1: Lower than or equal to bias
2: Greater than or equal to bias
3: The absolute value of the bias voltage while serving as the center
4: Serve bias as the center

Pr.03-10 (Analog Frequency Command for Reverse Run)

0: Negative frequency is not valid. Forward and reverse run is controlled by digital keypad or external terminal.
1: Neagtive frequency is valid. Positive frequency = forward run; negative frequency = reverse run. Direction can not be switched by digital keypad or external teriminal control.

Pr.03-11 Analog Input Gain (AVI) = 100%

Diagram 5

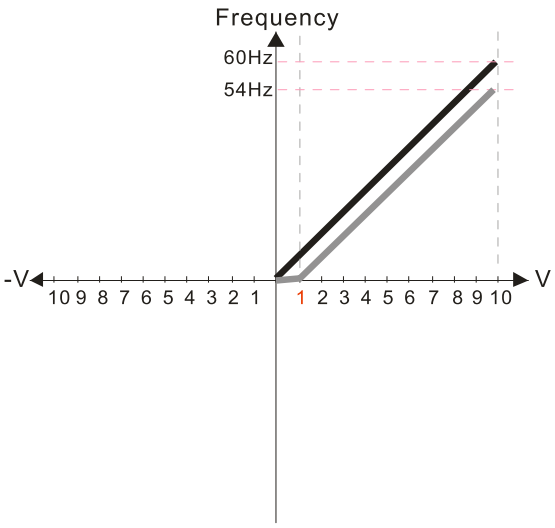

Pr.03-03=10%

Pr.03-07~03-09 (Positive/Negative Bias Mode)

0: No bias
1: Lower than or equal to bias
2: Greater than or equal to bias
3: The absolute value of the bias voltage while serving as the center
4: Serve bias as the center

Pr.03-10 (Analog Frequency Command for Reverse Run)

0: Negative frequency is not valid. Forward and reverse run is controlled by digital keypad or external terminal.
1: Neagtive frequency is valid. Positive frequency = forward run; negative frequency = reverse run. Direction can not be switched by digital keypad or external teriminal control.

Pr.03-11 Analog Input Gain (AVI)= 100%

Diagram 6

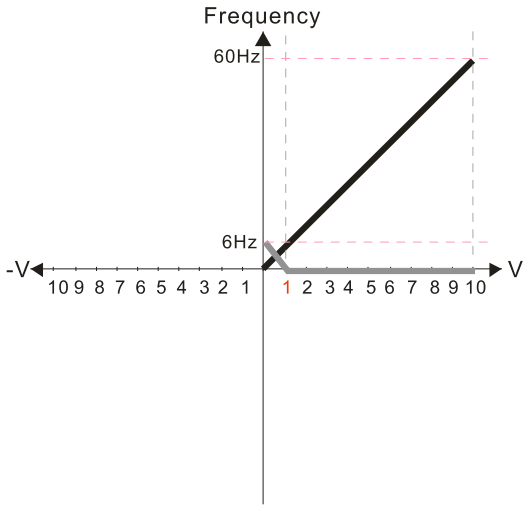

Pr.03-03=10%

Pr.03-07~03-09 (Positive/Negative Bias Mode)

0: No bias
1: Lower than or equal to bias
2: Greater than or equal to bias
3: The absolute value of the bias voltage while serving as the center
4: Serve bias as the center

Pr.03-10 (Analog Frequency Command for Reverse Run)

0: Negative frequency is not valid. Forward and reverse run is controlled by digital keypad or external terminal.
1: Neagtive frequency is valid. Positive frequency = forward run; negative frequency = reverse run. Direction can not be switched by digital keypad or external teriminal control.

Pr.03-11Analog Input Gain (AVI)= 100%

Diagram 7

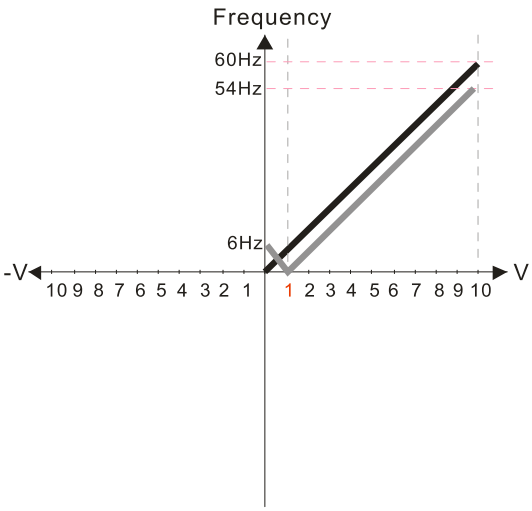

Pr.03-03=10%

Pr.03-07~03-09 (Positive/Negative Bias Mode)

0: No bias
1: Lower than or equal to bias
2: Greater than or equal to bias
3: The absolute value of the bias voltage while serving as the center
4: Serve bias as the center

Pr.03-10 (Analog Frequency Command for Reverse Run)

0: Negative frequency is not valid. Forward and reverse run is controlled by digital keypad or external terminal.
1: Neagtive frequency is valid. Positive frequency = forward run; negative frequency = reverse run. Direction can not be switched by digital keypad or external teriminal control.

Pr.03-11 Analog Input Gain (AVI) = 100%

Diagram 8

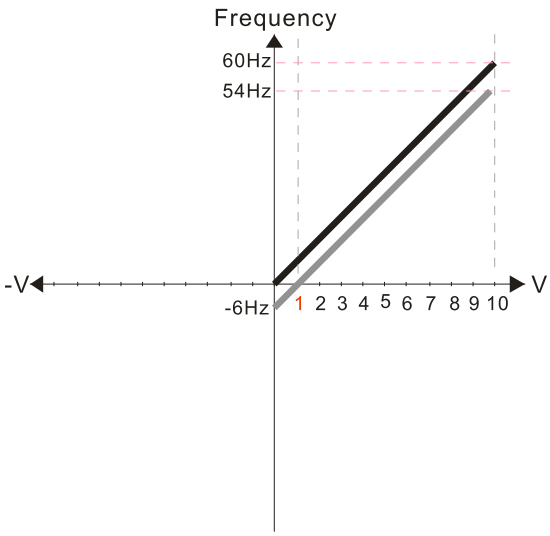

Pr.03-03=10%

Pr.03-07~03-09 (Positive/Negative Bias Mode)

0: No bias
1: Lower than or equal to bias
2: Greater than or equal to bias
3: The absolute value of the bias voltage while serving as the center
4: Serve bias as the center

Pr.03-10 (Analog Frequency Command for Reverse Run)

0: Negative frequency is not valid. Forward and reverse run is controlled by digital keypad or external terminal.
1: Neagtive frequency is valid. Positive frequency = forward run; negative frequency = reverse run. Direction can not be switched by digital keypad or external teriminal control.

Pr.03-11 Analog Input Gain (AVI) = 100%

Diagram 9

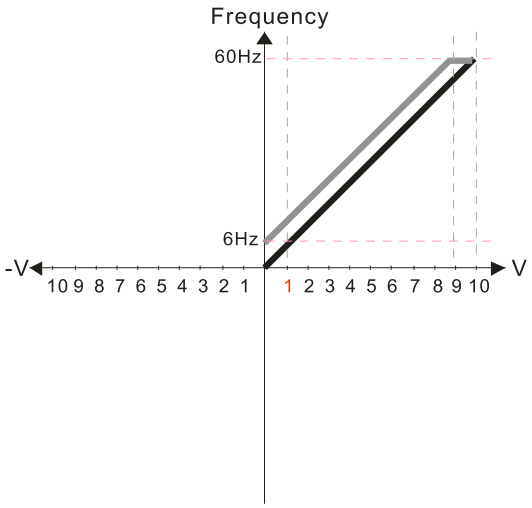

Pr.03-03=-10%

Pr.03-07~03-09 (Positive/Negative Bias Mode)

0: No bias
1: Lower than or equal to bias
2: Greater than or equal to bias
3: The absolute value of the bias voltage while serving as the center
4: Serve bias as the center

Pr.03-10 (Analog Frequency Command for Reverse Run)

0: Negative frequency is not valid. Forward and reverse run is controlled by digital keypad or external terminal.
1: Neagtive frequency is valid. Positive frequency = forward run; negative frequency = reverse run. Direction can not be switched by digital keypad or external teriminal control.

Pr.03-11 Analog Input Gain (AVI)= 100%

Diagram 10

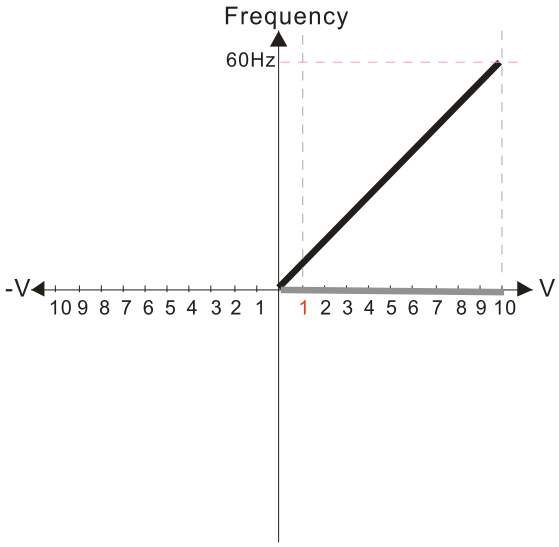

Pr.03-03=-10%

Pr.03-07~03-09 (Positive/Negative Bias Mode)

0: No bias
1: Lower than or equal to bias
2: Greater than or equal to bias
3: The absolute value of the bias voltage while serving as the center
4: Serve bias as the center

Pr.03-10 (Analog Frequency Command for Reverse Run)

0: Negative frequency is not valid. Forward and reverse run is controlled by digital keypad or external terminal.
1: Neagtive frequency is valid. Positive frequency = forward run; negative frequency = reverse run. Direction can not be switched by digital keypad or external teriminal control.

Pr.03-11 Analog Input Gain (AVI)= 100%

Diagram 11

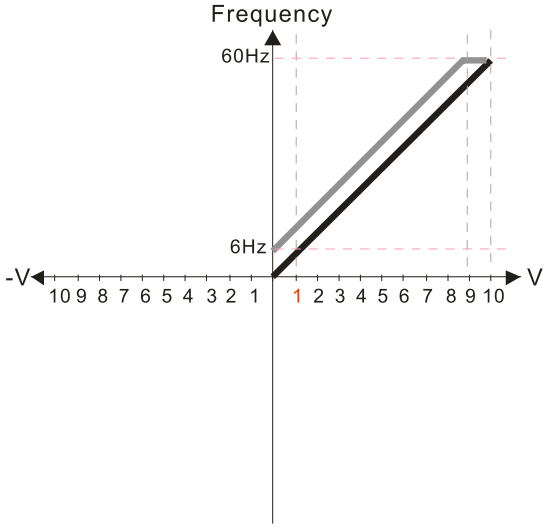

Pr.03-03=-10%

Pr.03-07~03-09 (Positive/Negative Bias Mode)

0: No bias
1: Lower than or equal to bias
2: Greater than or equal to bias
3: The absolute value of the bias voltage while serving as the center
4: Serve bias as the center

Pr.03-10 (Analog Frequency Command for Reverse Run)

0: Negative frequency is not valid. Forward and reverse run is controlled by digital keypad or external terminal.
1: Neagtive frequency is valid. Positive frequency = forward run; negative frequency = reverse run. Direction can not be switched by digital keypad or external teriminal control.

Pr.03-11 Analog Input Gain (AVI) = 100%

Diagram 12

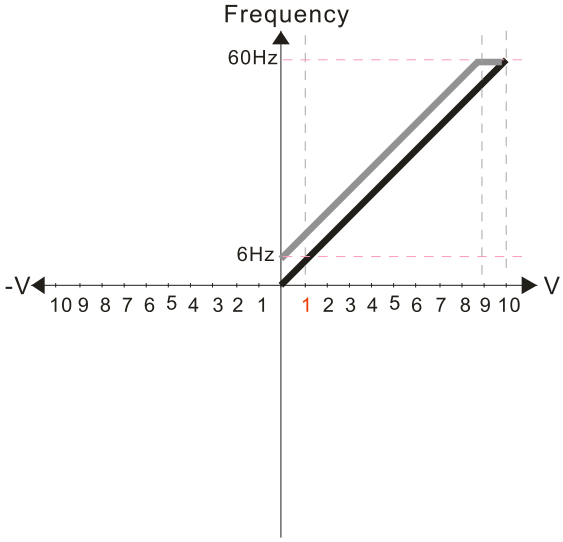

Pr.03-03=-10%

Pr.03-07~03-09 (Positive/Negative Bias Mode)

0: No bias
1: Lower than or equal to bias
2: Greater than or equal to bias
3: The absolute value of the bias voltage while serving as the center
4: Serve bias as the center

Pr.03-10 (Analog Frequency Command for Reverse Run)

0: Negative frequency is not valid. Forward and reverse run is controlled by digital keypad or external terminal.
1: Neagtive frequency is valid. Positive frequency = forward run; negative frequency = reverse run. Direction can not be switched by digital keypad or external teriminal control.

Pr.03-11 Analog Input Gain (AVI) = 100%

Diagram 13

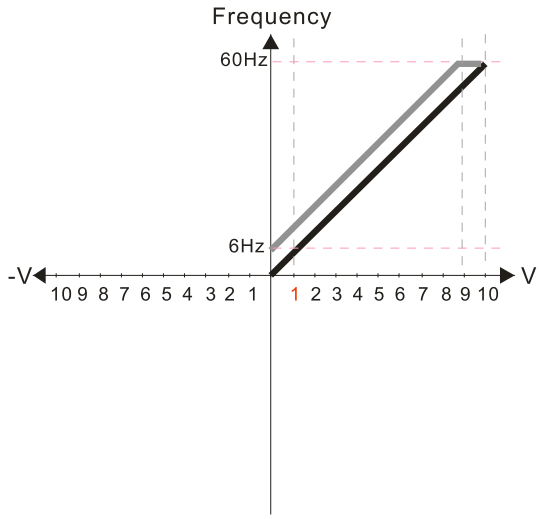

Pr.03-03=-10%

Pr.03-07~03-09 (Positive/Negative Bias Mode)
0: No bias
1: Lower than or equal to bias
2: Greater than or equal to bias
3: The absolute value of the bias voltage while serving as the center
4: Serve bias as the center

Pr.03-10 (Analog Frequency Command for Reverse Run)
0: Negative frequency is not valid. Forward and reverse run is controlled by digital keypad or external terminal.
1: Neagtive frequency is valid. Positive frequency = forward run; negative frequency = reverse run. Direction can not be switched by digital keypad or external teriminal control.

Pr.03-11 Analog Input Gain (AVI)= 100%

Diagram 14

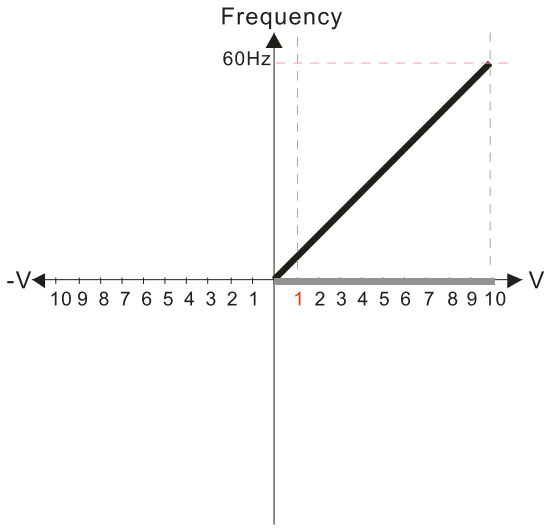

Pr.03-03=-10%

Pr.03-07~03-09 (Positive/Negative Bias Mode)
0: No bias
1: Lower than or equal to bias
2: Greater than or equal to bias
3: The absolute value of the bias voltage while serving as the center
4: Serve bias as the center

Pr.03-10 (Analog Frequency Command for Reverse Run)
0: Negative frequency is not valid. Forward and reverse run is controlled by digital keypad or external terminal.
1: Neagtive frequency is valid. Positive frequency = forward run; negative frequency = reverse run. Direction can not be switched by digital keypad or external teriminal control.

Pr.03-11 Analog Input Gain (AVI)= 100%

Diagram 15

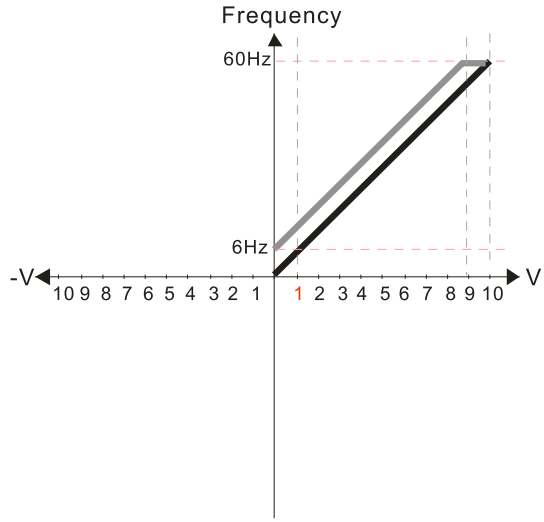

Pr.03-03=-10%

Pr.03-07~03-09 (Positive/Negative Bias Mode)
0: No bias
1: Lower than or equal to bias
2: Greater than or equal to bias
3: The absolute value of the bias voltage while serving as the center
4: Serve bias as the center

Pr.03-10 (Analog Frequency Command for Reverse Run)
0: Negative frequency is not valid. Forward and reverse run is controlled by digital keypad or external terminal.
1: Neagtive frequency is valid. Positive frequency = forward run; negative frequency = reverse run. Direction can not be switched by digital keypad or external teriminal control.

Pr.03-11 Analog Input Gain (AVI) = 100%

Diagram 16

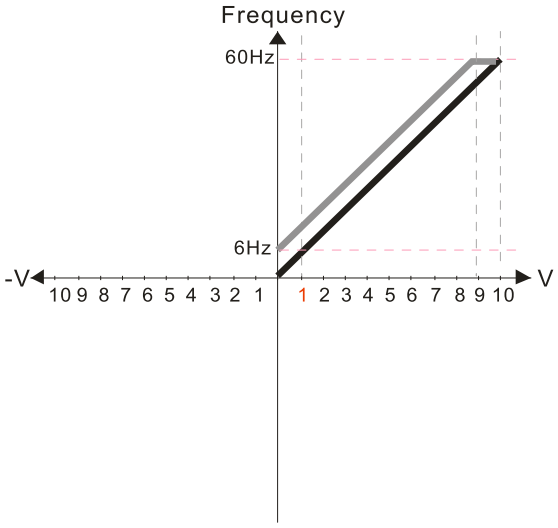

Pr.03-03=-10%

Pr.03-07~03-09 (Positive/Negative Bias Mode)

0: No bias
1: Lower than or equal to bias
2: Greater than or equal to bias
3: The absolute value of the bias voltage while serving as the center
4: Serve bias as the center

Pr.03-10 (Analog Frequency Command for Reverse Run)

0: Negative frequency is not valid. Forward and reverse run is controlled by digital keypad or external terminal.
1: Neagtive frequency is valid. Positive frequency = forward run; negative frequency = reverse run. Direction can not be switched by digital keypad or external teriminal control.

Pr.03-11 Analog Input Gain (AVI) = 100%

Diagram 17

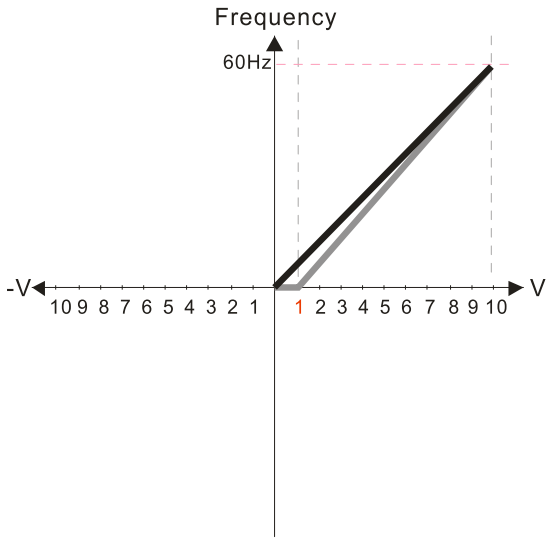

Pr.03-03=10%

Pr.03-07~03-09 (Positive/Negative Bias Mode)

0: No bias
1: Lower than or equal to bias
2: Greater than or equal to bias
3: The absolute value of the bias voltage while serving as the center
4: Serve bias as the center

Pr.03-10 (Analog Frequency Command for Reverse Run)

0: Negative frequency is not valid. Forward and reverse run is controlled by digital keypad or external terminal.
1: Neagtive frequency is valid. Positive frequency = forward run; negative frequency = reverse run. Direction can not be switched by digital keypad or external teriminal control.

Pr.03-11 Analog Input Gain (AVI)= 111.1%

10/9=111.1%

Diagram 18

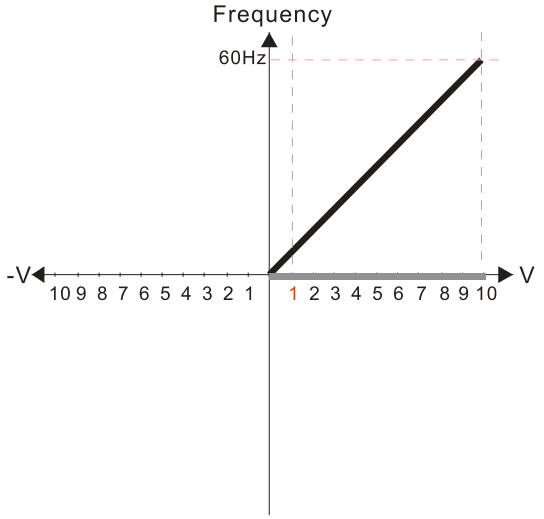

Pr.03-03=10%

Pr.03-07~03-09 (Positive/Negative Bias Mode)

0: No bias
1: Lower than or equal to bias
2: Greater than or equal to bias
3: The absolute value of the bias voltage while serving as the center
4: Serve bias as the center

Pr.03-10 (Analog Frequency Command for Reverse Run)

0: Negative frequency is not valid. Forward and reverse run is controlled by digital keypad or external terminal.
1: Neagtive frequency is valid. Positive frequency = forward run; negative frequency = reverse run. Direction can not be switched by digital keypad or external teriminal control.

Pr.03-11 Analog Input Gain (AVI)=111.1%

10/9 =111.1%

Diagram 19

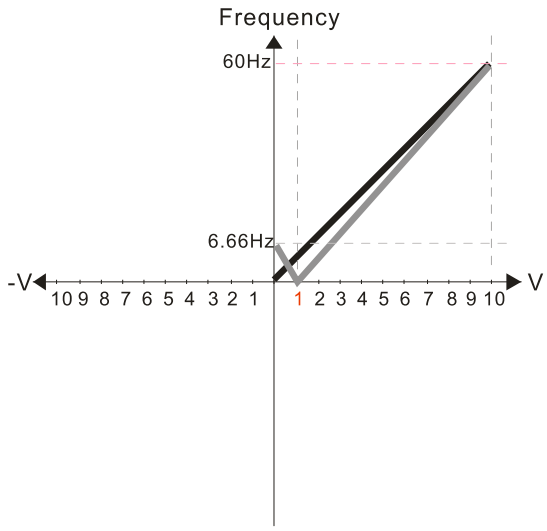

Pr.03-03=10%

Pr.03-07~03-09 (Positive/Negative Bias Mode)

0: No bias
1: Lower than or equal to bias
2: Greater than or equal to bias
3: The absolute value of the bias voltage while serving as the center
4: Serve bias as the center

Pr.03-10 (Analog Frequency Command for Reverse Run)

0: Negative frequency is not valid. Forward and reverse run is controlled by digital keypad or external terminal.
1: Neagtive frequency is valid. Positive frequency = forward run; negative frequency = reverse run. Direction can not be switched by digital keypad or external teriminal control.

Pr.03-11 Analog Input Gain (AVI) = 111.1%
10/9 =111.1%

Diagram 20

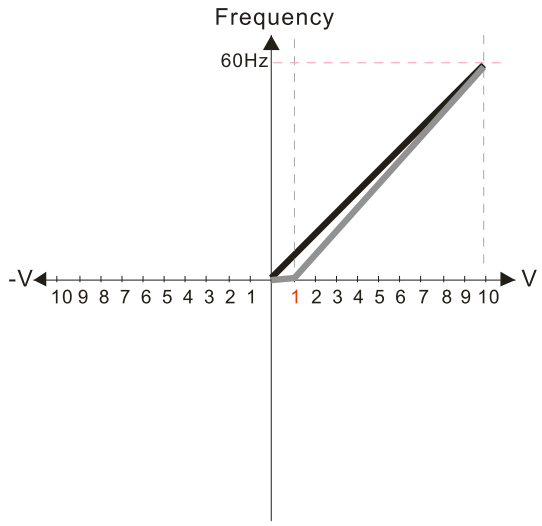

Pr.03-03=10%

Pr.03-07~03-09 (Positive/Negative Bias Mode)

0: No bias
1: Lower than or equal to bias
2: Greater than or equal to bias
3: The absolute value of the bias voltage while serving as the center
4: Serve bias as the center

Pr.03-10 (Analog Frequency Command for Reverse Run)

0: Negative frequency is not valid. Forward and reverse run is controlled by digital keypad or external terminal.
1: Neagtive frequency is valid. Positive frequency = forward run; negative frequency = reverse run. Direction can not be switched by digital keypad or external teriminal control.

Pr.03-11 Analog Input Gain (AVI) = 111.1%
10/9 =111.1%

Diagram 21

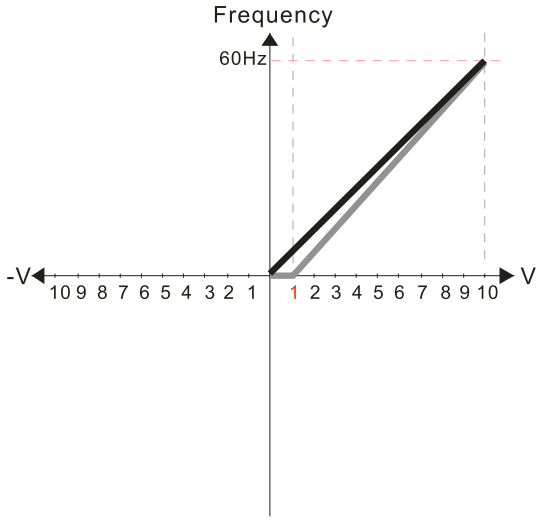

Pr.03-03=10%

Pr.03-07~03-09 (Positive/Negative Bias Mode)

0: No bias
1: Lower than or equal to bias
2: Greater than or equal to bias
3: The absolute value of the bias voltage while serving as the center
4: Serve bias as the center

Pr.03-10 (Analog Frequency Command for Reverse Run)

0: Negative frequency is not valid. Forward and reverse run is controlled by digital keypad or external terminal.
1: Neagtive frequency is valid. Positive frequency = forward run; negative frequency = reverse run. Direction can not be switched by digital keypad or external teriminal control.

Pr.03-11Analog Input Gain (AVI) = 111.1%
10/9 =111.1%

Diagram 22

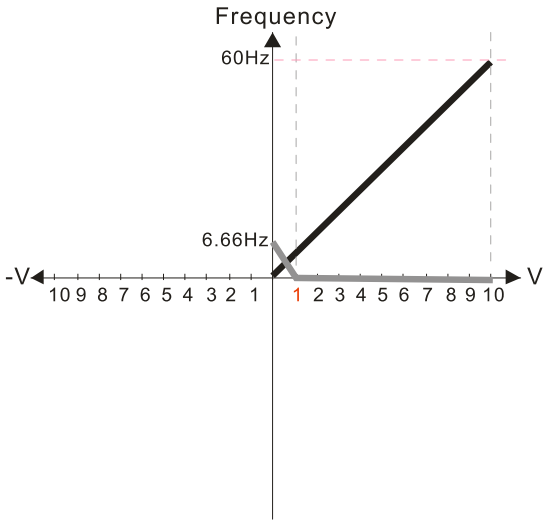

Pr.03-03=10%

Pr.03-07~03-09 (Positive/Negative Bias Mode)
0: No bias
1: Lower than or equal to bias
2: Greater than or equal to bias
3: The absolute value of the bias voltage while serving as the center
4: Serve bias as the center

Pr.03-10 (Analog Frequency Command for Reverse Run)
0: Negative frequency is not valid. Forward and reverse run is controlled by digital keypad or external terminal.
1: Neagtive frequency is valid. Positive frequency = forward run; negative frequency = reverse run. Direction can not be switched by digital keypad or external teriminal control.

Pr03-11Analog Input Gain (AVI) = 111.1%
10/9 =111.1%

Diagram 23

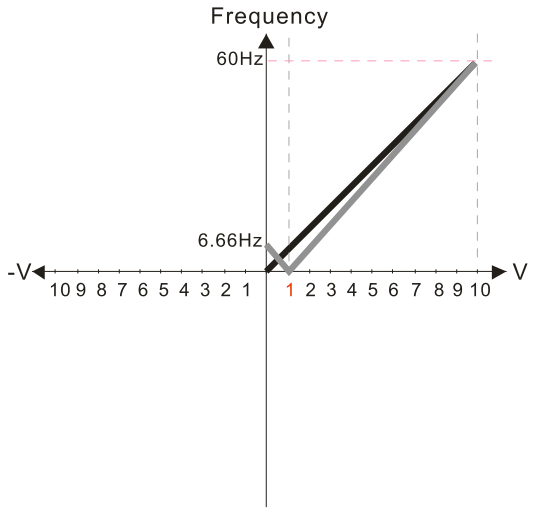

Pr.03-03=10%

Pr.03-07~03-09 (Positive/Negative Bias Mode)
0: No bias
1: Lower than or equal to bias
2: Greater than or equal to bias
3: The absolute value of the bias voltage while serving as the center
4: Serve bias as the center

Pr.03-10 (Analog Frequency Command for Reverse Run)
0: Negative frequency is not valid. Forward and reverse run is controlled by digital keypad or external terminal.
1: Neagtive frequency is valid. Positive frequency = forward run; negative frequency = reverse run. Direction can not be switched by digital keypad or external teriminal control.

Pr.03-11 Analog Input Gain (AVI) = 111.1%
10/9 =111.1%

Diagram 24

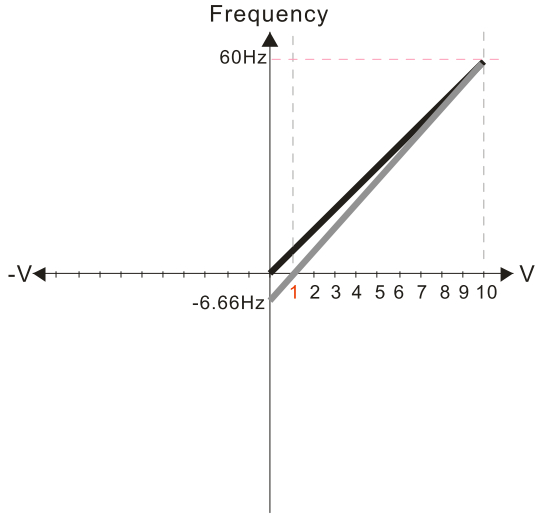

Pr.03-03=10%

Pr.03-07~03-09 (Positive/Negative Bias Mode)
0: No bias
1: Lower than or equal to bias
2: Greater than or equal to bias
3: The absolute value of the bias voltage while serving as the center
4: Serve bias as the center

Pr.03-10 (Analog Frequency Command for Reverse Run)
0: Negative frequency is not valid. Forward and reverse run is controlled by digital keypad or external terminal.
1: Neagtive frequency is valid. Positive frequency = forward run; negative frequency = reverse run. Direction can not be switched by digital keypad or external teriminal control.

Pr.03-11 Analog Input Gain (AVI) = 100%
10/9 =111.1%

Diagram 25

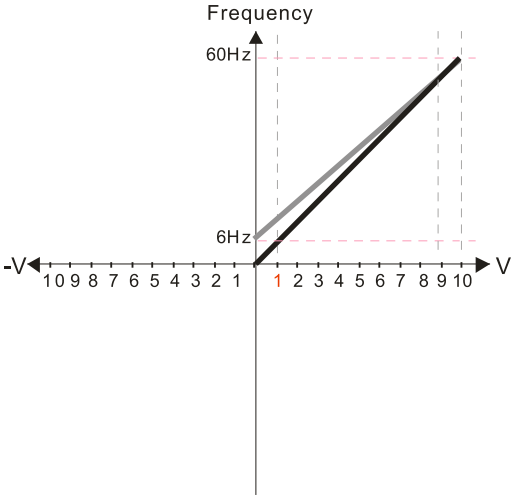

Pr.03-07~03-09 (Positive/Negative Bias Mode)

0: No bias
1: Lower than or equal to bias
2: Greater than or equal to bias
3: The absolute value of the bias voltage while serving as the center
4: Serve bias as the center

Pr.03-10 (Analog Frequency Command for Reverse Run)

0: Negative frequency is not valid. Forward and reverse run is controlled by digital keypad or external terminal.
1: Neagtive frequency is valid. Positive frequency = forward run; negative frequency = reverse run. Direction can not be switched by digital keypad or external teriminal control.

Calculate the bias:

$$\frac{60\text{-}6\text{Hz}}{10\text{V}} = \frac{6\text{-}0\text{Hz}}{(0\text{-}x\text{V})} \quad x\text{V} = \frac{10}{-9} = -1.11\text{V} \quad \therefore 03\text{-}03 = \frac{-1.11}{10} \times 100\% = -11.1\%$$

Calculate the gain: $03\text{-}11 = \frac{10\text{V}}{11.1\text{V}} \times 100\% = 90.0\%$

Diagram 26

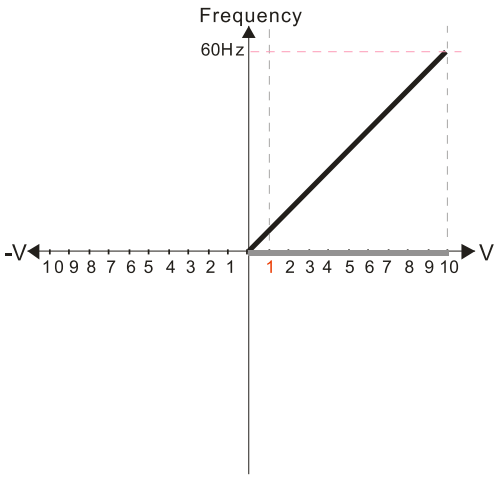

Pr.03-07~03-09 (Positive/Negative Bias Mode)

0: No bias
1: Lower than or equal to bias
2: Greater than or equal to bias
3: The absolute value of the bias voltage while serving as the center
4: Serve bias as the center

Pr.03-10 (Analog Frequency Command for Reverse Run)

0: Negative frequency is not valid. Forward and reverse run is controlled by digital keypad or external terminal.
1: Neagtive frequency is valid. Positive frequency = forward run; negative frequency = reverse run. Direction can not be switched by digital keypad or external teriminal control.

Calculate the bias:

$$\frac{60\text{-}6\text{Hz}}{10\text{V}} = \frac{6\text{-}0\text{Hz}}{(0\text{-}x\text{V})} \quad x\text{V} = \frac{10}{-9} = -1.11\text{V} \quad \therefore 03\text{-}03 = \frac{-1.11}{10} \times 100\% = -11.1\%$$

Calculate the gain: $03\text{-}11 = \frac{10\text{V}}{11.1\text{V}} \times 100\% = 90.0\%$

Diagram 27

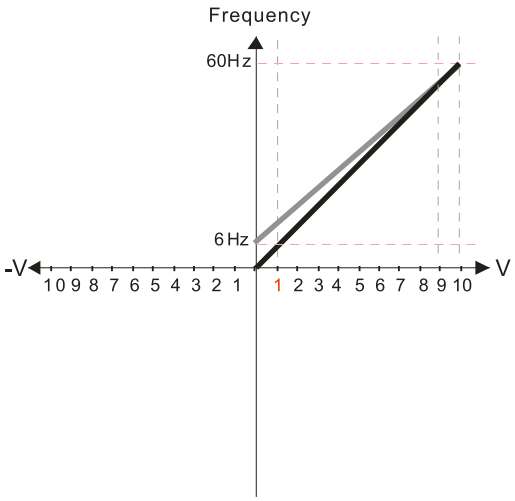

Pr.03-07~03-09 (Positive/Negative Bias Mode)

0: No bias
1: Lower than or equal to bias
2: Greater than or equal to bias
3: The absolute value of the bias voltage while serving as the center
4: Serve bias as the center

Pr.03-10 (Analog Frequency Command for Reverse Run)

0: Negative frequency is not valid. Forward and reverse run is controlled by digital keypad or external terminal.
1: Neagtive frequency is valid. Positive frequency = forward run; negative frequency = reverse run. Direction can not be switched by digital keypad or external teriminal control.

Calculate the bias:

$$\frac{60\text{-}6\text{Hz}}{10\text{V}} = \frac{6\text{-}0\text{Hz}}{(0\text{-}x\text{V})} \quad x\text{V} = \frac{10}{-9} = -1.11\text{V} \quad \therefore 03\text{-}03 = \frac{-1.11}{10} \times 100\% = -11.1\%$$

Calculate the gain: $03\text{-}11 = \frac{10\text{V}}{11.1\text{V}} \times 100\% = 90.0\%$

Diagram 28

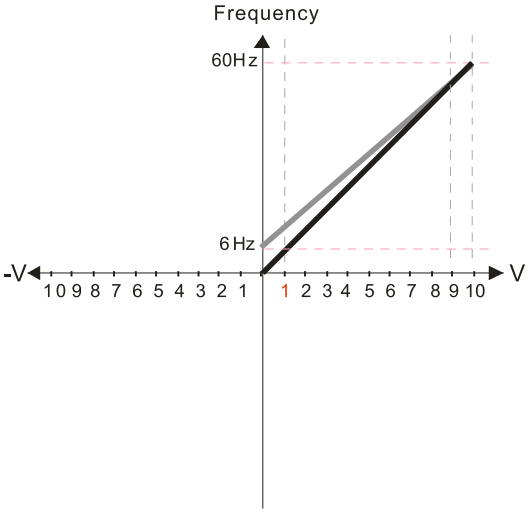

Pr.03-07~03-09 (Positive/Negative Bias Mode)

0: No bias
1: Lower than or equal to bias
2: Greater than or equal to bias
3: The absolute value of the bias voltage while serving as the center
4: Serve bias as the center

Pr.03-10 (Analog Frequency Command for Reverse Run)

0: Negative frequency is not valid. Forward and reverse run is controlled by digital keypad or external terminal.
1: Neagtive frequency is valid. Positive frequency = forward run; negative frequency = reverse run. Direction can not be switched by digital keypad or external teriminal control.

Calculate the bias:

$$\frac{60\text{-}6\text{Hz}}{10\text{V}} = \frac{6\text{-}0\text{Hz}}{(0\text{-}\ x\text{V})} \quad x\text{V} = \frac{10}{-9} = -1.11\text{V} \quad \therefore 03\text{-}03 = \frac{-1.11}{10} \times 100\% = -11.1\%$$

Calculate the gain: $03\text{-}11 = \frac{10\text{V}}{11.1\text{V}} \times 100\% = 90.0\%$

Diagram 29

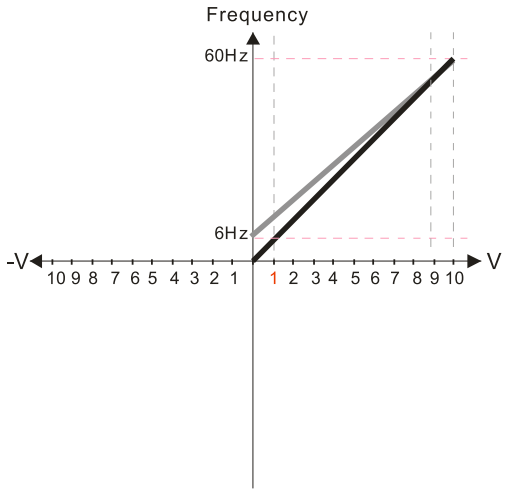

Pr.03-07~03-09 (Positive/Negative Bias Mode)

0: No bias
1: Lower than or equal to bias
2: Greater than or equal to bias
3: The absolute value of the bias voltage while serving as the center
4: Serve bias as the center

Pr.03-10 (Analog Frequency Command for Reverse Run)

0: Negative frequency is not valid. Forward and reverse run is controlled by digital keypad or external terminal.
1: Neagtive frequency is valid. Positive frequency = forward run; negative frequency = reverse run. Direction can not be switched by digital keypad or external teriminal control.

Calculate the bias:

$$\frac{60\text{-}6\text{Hz}}{10\text{V}} = \frac{6\text{-}0\text{Hz}}{(0\text{-}\ x\text{V})} \quad x\text{V} = \frac{10}{-9} = -1.11\text{V} \quad \therefore 03\text{-}03 = \frac{-1.11}{10} \times 100\% = -11.1\%$$

Calculate the gain: $03\text{-}11 = \frac{10\text{V}}{11.1\text{V}} \times 100\% = 90.0\%$

Diagram 30

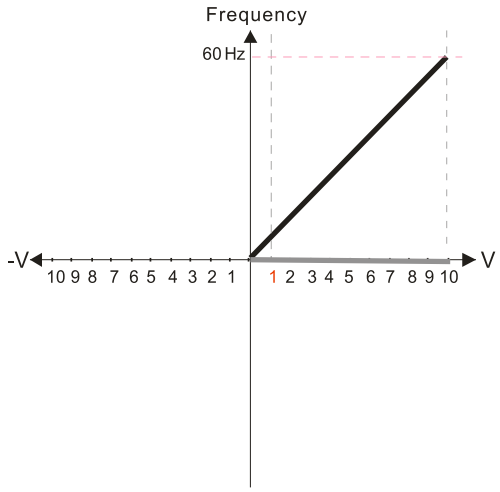

Pr.03-07~03-09 (Positive/Negative Bias Mode)

0: No bias
1: Lower than or equal to bias
2: Greater than or equal to bias
3: The absolute value of the bias voltage while serving as the center
4: Serve bias as the center

Pr.03-10 (Analog Frequency Command for Reverse Run)

0: Negative frequency is not valid. Forward and reverse run is controlled by digital keypad or external terminal.
1: Neagtive frequency is valid. Positive frequency = forward run; negative frequency = reverse run. Direction can not be switched by digital keypad or external teriminal control.

Calculate the bias:

$$\frac{60\text{-}6\text{Hz}}{10\text{V}} = \frac{6\text{-}0\text{Hz}}{(0\text{-}\ x\text{V})} \quad x\text{V} = \frac{10}{-9} = -1.11\text{V} \quad \therefore 03\text{-}03 = \frac{-1.11}{10} \times 100\% = -11.1\%$$

Calculate the gain: $03\text{-}11 = \frac{10\text{V}}{11.1\text{V}} \times 100\% = 90.0\%$

Diagram 31

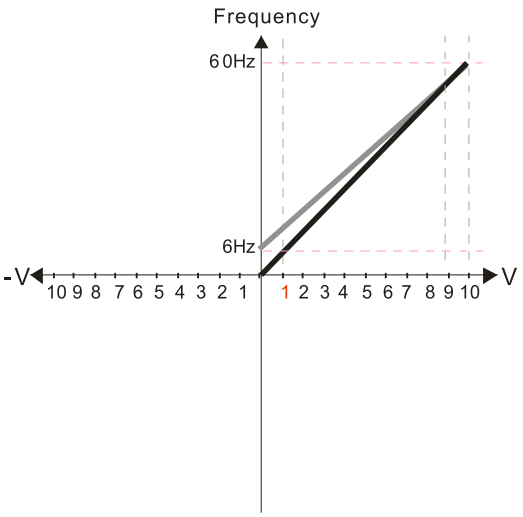

Pr.03-07~03-09 (Positive/Negative Bias Mode)
0: No bias
1: Lower than or equal to bias
2: Greater than or equal to bias
3: The absolute value of the bias voltage while serving as the center
4: Serve bias as the center

Pr.03-10 (Analog Frequency Command for Reverse Run)
0: Negative frequency is not valid. Forward and reverse run is controlled by digital keypad or external terminal.
1: Neagtive frequency is valid. Positive frequency = forward run; negative frequency = reverse run. Direction can not be switched by digital keypad or external teriminal control.

Calculate the bias:

$$\frac{60\text{-}6\text{Hz}}{10\text{V}} = \frac{6\text{-}0\text{Hz}}{(0\text{-}x\text{V})} \quad x\text{V} = \frac{10}{-9} = -1.11\text{V} \quad \therefore 03\text{-}03 = \frac{-1.11}{10} \times 100\% = -11.1\%$$

Calculate the gain: $03\text{-}11 = \frac{10\text{V}}{11.1\text{V}} \times 100\% = 90.0\%$

Diagram 32

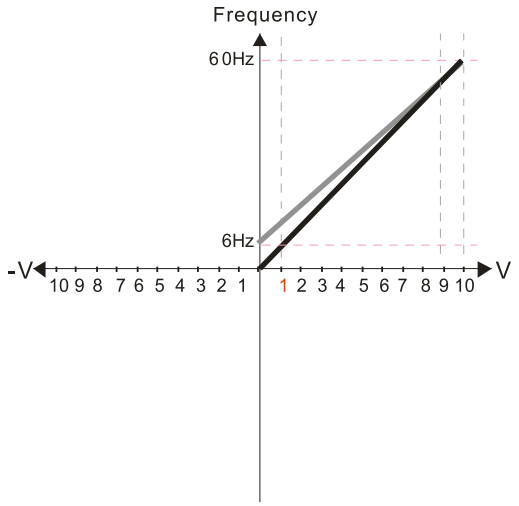

Pr.03-07~03-09 (Positive/Negative Bias Mode)
0: No bias
1: Lower than or equal to bias
2: Greater than or equal to bias
3: The absolute value of the bias voltage while serving as the center
4: Serve bias as the center

Pr.03-10 (Analog Frequency Command for Reverse Run)
0: Negative frequency is not valid. Forward and reverse run is controlled by digital keypad or external terminal.
1: Neagtive frequency is valid. Positive frequency = forward run; negative frequency = reverse run. Direction can not be switched by digital keypad or external teriminal control.

Calculate the bias:

$$\frac{60\text{-}6\text{Hz}}{10\text{V}} = \frac{6\text{-}0\text{Hz}}{(0\text{-}x\text{V})} \quad x\text{V} = \frac{10}{-9} = -1.11\text{V} \quad \therefore 03\text{-}03 = \frac{-1.11}{10} \times 100\% = -11.1\%$$

Calculate the gain: $03\text{-}11 = \frac{10\text{V}}{11.1\text{V}} \times 100\% = 90.0\%$

Diagram 33

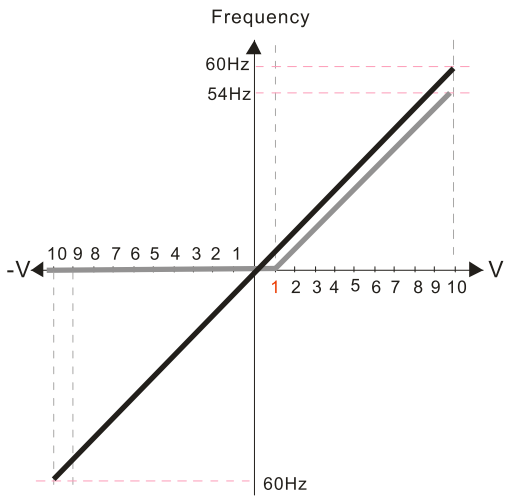

Pr.00-21=0 (Digital keypad control and run in FWD direction)
Pr.03-05 Analog Positive Voltage Input Bias (AUI) = 10%
Pr.03-07~03-09 (Positive/Negative Bias Mode)
0: No bias
1: Lower than or equal to bias
2: Greater than or equal to bias
3: The absolute value of the bias voltage while serving as the center
4: Serve bias as the center

Pr.03-13 Analog Positive Input Gain (AUI) = 100%
Pr.03-14 Analog Positive Input Gain (AUI) = 100%

Diagram 34

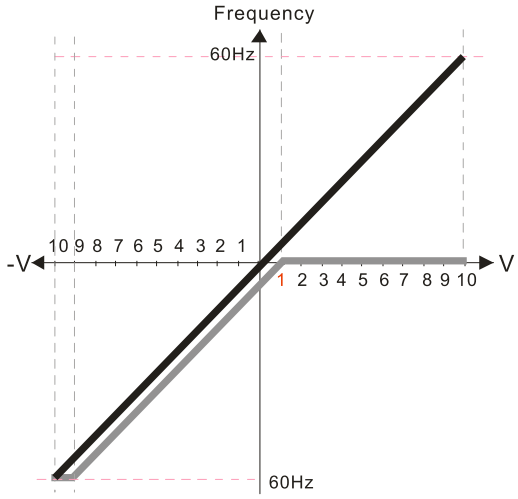

Pr.00-21=0 (Digital keypad control and run in FWD direction)
Pr.03-05 Analog Positive Voltage Input Bias (AUI) = 10%
Pr.03-07~03-09 (Positive/Negative Bias Mode)
0: No bias
1: Lower than or equal to bias
2: Greater than or equal to bias
3: The absolute value of the bias voltage while serving as the center
4: Serve bias as the center

Pr.03-13 Analog Positive Input Gain (AUI) = 100%
Pr.03-14 Analog Positive Input Gain (AUI) = 100%

Diagram 35

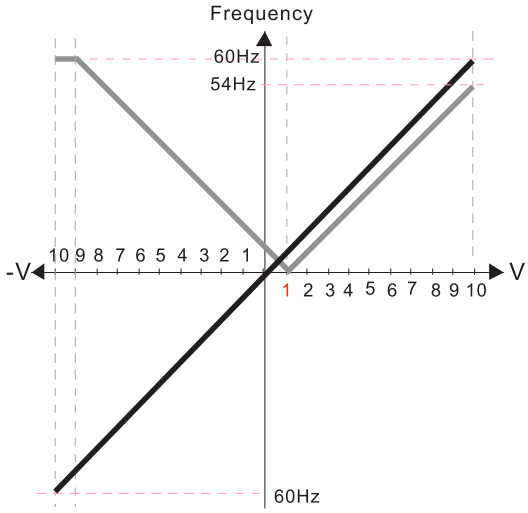

Pr.00-21=0 (Digital keypad control and run in FWD direction)
Pr.03-05 Analog Positive Voltage Input Bias (AUI) = 10%
Pr.03-07~03-09 (Positive/Negative Bias Mode)
0: No bias
1: Lower than or equal to bias
2: Greater than or equal to bias
3: The absolute value of the bias voltage while serving as the center
4: Serve bias as the center

Pr.03-13 Analog Positive Input Gain (AUI) = 100%
Pr.03-14 Analog Positive Input Gain (AUI) = 100%

Diagram 36

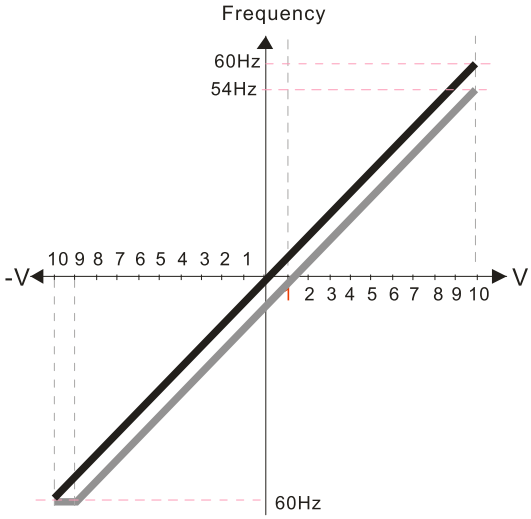

Pr.00-21=0 (Digital keypad control and run in FWD direction)
Pr.03-05 Analog Positive Voltage Input Bias (AUI) = 10%
Pr.03-07~03-09 (Positive/Negative Bias Mode)
0: No bias
1: Lower than or equal to bias
2: Greater than or equal to bias
3: The absolute value of the bias voltage while serving as the center
4: Serve bias as the center

Pr.03-13 Analog Positive Input Gain (AUI) = 100%
Pr.03-14 Analog Positive Input Gain (AUI) = 100%

Diagram 37

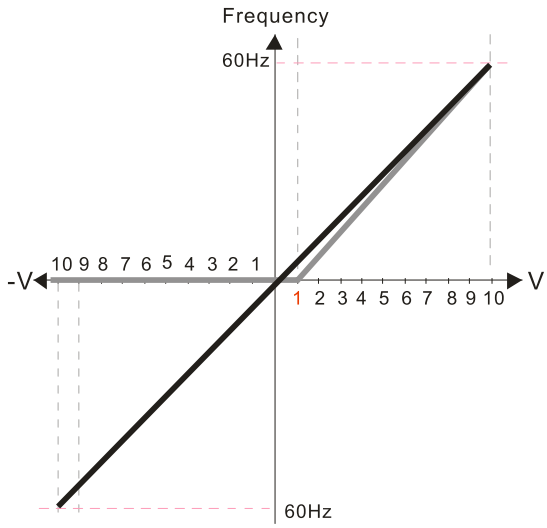

Pr.00-21=0 (Digital keypad control and run in FWD direction)
Pr.03-05 Analog Positive Voltage Input Bias (AUI) = 10%
Pr.03-07~03-09 (Positive/Negative Bias Mode)
0: No bias
1: Lower than or equal to bias
2: Greater than or equal to bias
3: The absolute value of the bias voltage while serving as the center
4: Serve bias as the center

Pr.03-13 Analog Positive Input Gain (AUI) = 111.1%
(10/9)*100% = 111.1%
Pr.03-14 Analog Positive Input Gain (AUI) = 100%

Diagram 38

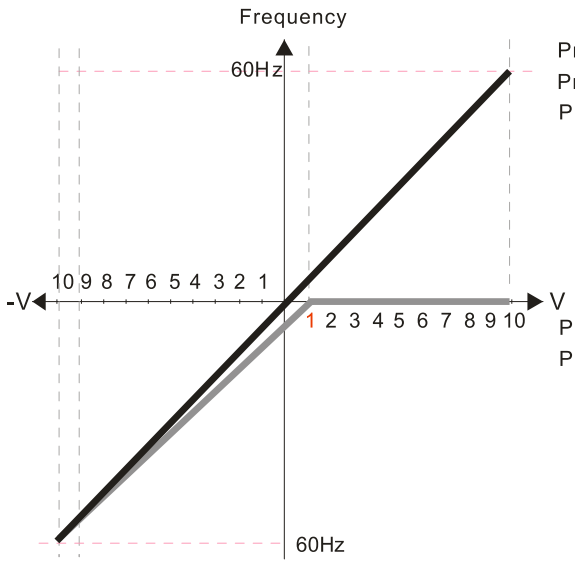

Pr.00-21=0 (Digital keypad control and run in FWD direction)
Pr.03-05 Analog Positive Voltage Input Bias (AUI) = 10%
Pr.03-07~03-09 (Positive/Negative Bias Mode)
0: No bias
1: Lower than or equal to bias
2: Greater than or equal to bias
3: The absolute value of the bias voltage while serving as the center
4: Serve bias as the center

Pr.03-13 Analog Positive Input Gain (AUI) = 100%
Pr.03-14 Analog Positive Input Gain (AUI) = 90.0%
(10/11)*100% = 90.9%

Diagram 39

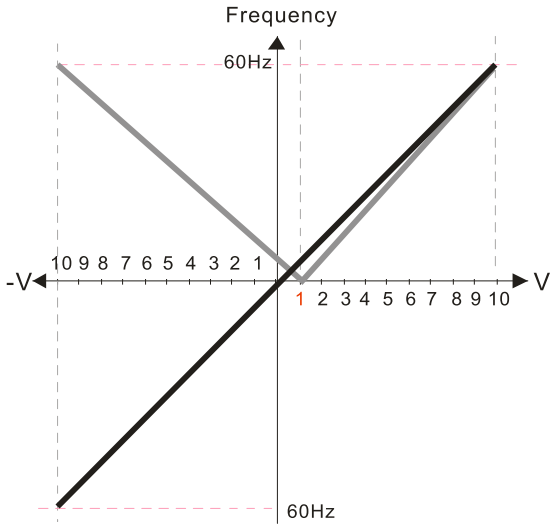

Pr.00-21=0 (Digital keypad control and run in FWD direction)
Pr.03-05 Analog Positive Voltage Input Bias (AUI) = 10%
Pr.03-07~03-09 (Positive/Negative Bias Mode)
0: No bias
1: Lower than or equal to bias
2: Greater than or equal to bias
3: The absolute value of the bias voltage while serving as the center
4: Serve bias as the center

Pr.03-13 Analog Positive Input Gain (AUI) = 111.1%
(10/9)*100% = 111.1%
Pr.03-14 Analog Positive Input Gain (AUI) = 90.0%
(10/11)*100% = 90.9%

Diagram 40

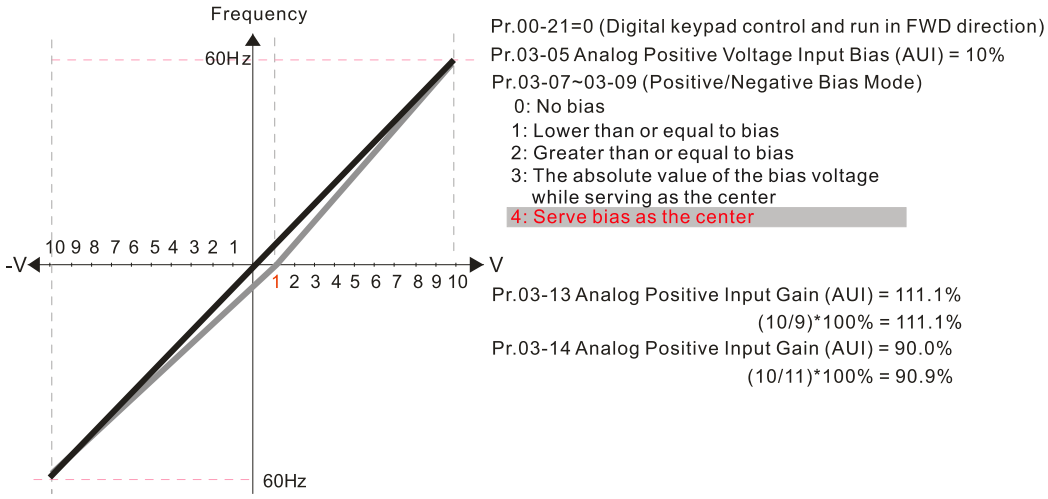

03-10 Reverse Setting when Analog Signal Input is Negative Frequency

Default: 0

Settings 0: Negative frequency is not allowed. The digital keypad or external terminal controls the forward and reverse direction.

1: Negative frequency is allowed. Positive frequency = run in forward direction; negative frequency = run in reverse direction. The digital keypad or external terminal control cannot switch the running direction.

- Use this parameter only for AVI or ACI analog input.
- Requirements for negative frequency (reverse running)
  1. Pr.03-10 = 1
  2. Bias mode = Bias serves as the center
  3. Corresponded analog input gain < 0 (negative); this makes the input frequency negative.
- In using the additional analog input function (Pr.03-18 = 1), when the analog signal is negative after the addition, you can set this parameter to allow or not allow the reverse running. The result after adding depends on the “Requirements for negative frequency (reverse running)”.

03-11 AVI Analog Input Gain
03-12 ACI Analog Input Gain
03-13 AUI Analog Positive Input Gain
03-14 AUI Analog Negative Input Gain

Default: 100.0

Settings -500.0–500.0%

- Pr.03-03–Pr.03-14 are used when the Frequency command source is the analog voltage or current signal.

03-15 AVI Analog Input Filter Time
03-16 ACI Analog Input Filter Time
03-17 AUI Analog Input Filter Time

Default: 0.01

Settings 0.00–20.00 sec.

- Analog signals, such as those entering AVI, ACI and AUI, are commonly affected by interference

that affects the stability of the analog control. Use the Input Noise Filter to create a more stable system.

- When the time constant setting is too large, the control is stable, but the control response is slow. When the time constant setting is too small, the control response is faster, but the control may be unstable. For optimal setting, adjust the setting based on the control stability or the control response.

03-18 Analog Input Addition Function

Default: 0

Settings 0: Disable (AVI, ACI, AUI)
1: Enable

- When Pr.03-18 = 1:
  Example 1: Pr.03-00 = Pr.03-01 = 1, Frequency command = AVI + ACI
  Example 2: Pr.03-00 = Pr.03-01 = Pr.03-02 = 1, Frequency command = AVI + ACI + AUI
  Example 3: Pr.03-00 = Pr.03-02 = 1, Frequency command = AVI + AUI
  Example 4: Pr.03-01 = Pr.03-02 = 1, Frequency command = ACI + AUI
- When Pr.03-18 = 0 and the analog input selection settings (Pr.03-00, Pr.03-01 and Pr.03-02) are the same, AVI has priority over ACI and AUI (AVI > ACI > AUI).

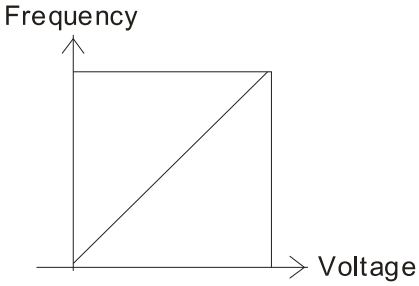

$$Fcmd=[(ay \pm bias)*gain]*\frac{Fmax(01\text{-}00)}{10V \text{ or } 16mA \text{ or } 20mA}$$

Fcmd: the corresponding frequency of 10V or 20mA

ay : 0~10V, 4~20mA, 0~20mA
bias : Pr.03-03,Pr. 03-04, Pr.03-05
gain : Pr.03-11, Pr.03-12, Pr.03-13, Pr.03-14

03-19 Signal Loss Selection for the Analog Input 4–20 mA

Default: 0

Settings 0: Disable
1: Continue operation at the last frequency
2: Decelerate to 0 Hz
3: Stop immediately and display “ACE”
4: Operates with output frequency lower limit (Pr.01-11) and displays ANL

- Determines the treatment when the 4–20 mA signal is lost [AVIc (Pr.03-28 = 2) or ACIc (Pr.03-29 = 0)].
- When Pr.03-28 ≠ 2, the voltage input to AVI terminal is 0–10 V or 0–20 mA, and Pr.03-19 is invalid.
- When Pr.03-29 ≠ 0, the voltage input to ACI terminal is 0–10 V or 0–20 mA, and the Pr.03-19 is invalid.
- When the setting is 1, 2 or 4, the keypad displays the warning code “ANL”. It keeps blinking until the ACI signal is recovered.
- When the drive stops, the condition that causes the warning does not exist, so the warning automatically disappears.

📖 The ACI (4–20 mA) signal loss level is 3.6 mA, and the return level is 4 mA.

03-20 AFM1 Multi-function Output 1

Default: 0

03-23 AFM2 Multi-function Output 2

Default: 0

Settings 0–25

Function Chart

<table>
<tr><th>Settings</th><th>Functions</th><th>Descriptions</th></tr>
<tr><td>0</td><td>Output frequency (Hz)</td><td>Maximum frequency Pr.01-00 is processed as 100%.</td></tr>
<tr><td>1</td><td>Frequency command (Hz)</td><td>Maximum frequency Pr.01-00 is processed as 100%.</td></tr>
<tr><td>2</td><td>Motor speed (Hz)</td><td>Maximum frequency Pr.01-00 is processed as 100%.</td></tr>
<tr><td>3</td><td>Output current (rms)</td><td>(2.5 × drive rated current) is processed as 100%</td></tr>
<tr><td>4</td><td>Output voltage</td><td>(2 × motor rated voltage) is processed as 100%</td></tr>
<tr><td>5</td><td>DC bus Voltage</td><td>450 V (900 V) =100%</td></tr>
<tr><td>6</td><td>Power factor</td><td>-1.000–1.000=100%</td></tr>
<tr><td>7</td><td>Power</td><td>(2 × drive rated power) is processed as 100%</td></tr>
<tr><td>8</td><td>Output torque</td><td>Full-load torque = 100%</td></tr>
<tr><td>9</td><td>AVI</td><td>0–10 V = 0–100%</td></tr>
<tr><td>10</td><td>ACI</td><td>4–20 mA = 0–100%</td></tr>
<tr><td>11</td><td>AUI</td><td>-10–10 V = 0–100%</td></tr>
<tr><td>12</td><td>Iq current command</td><td>(2.5 × drive rated current) is processed as 100%</td></tr>
<tr><td>13</td><td>Iq feedback value</td><td>(2.5 × drive rated current) is processed as 100%</td></tr>
<tr><td>14</td><td>Id current command</td><td>(2.5 × drive rated current) is processed as 100%</td></tr>
<tr><td>15</td><td>Id feedback value</td><td>(2.5 × drive rated current) is processed as 100%</td></tr>
<tr><td>18</td><td>Torque command</td><td>Motor rated torque = 100%</td></tr>
<tr><td>19</td><td>PG2 frequency command</td><td>Maximum operation frequency (Pr.01-00) is processed as 100%.</td></tr>
<tr><td>20</td><td>CANopen analog output</td><td>For CANopen communication analog output
<table>
<tr><th>Terminal</th><th>Address</th></tr>
<tr><td>AFM1</td><td>2026-A1</td></tr>
<tr><td>AFM2</td><td>2026-A2</td></tr>
<tr><td>AO10</td><td>2026-AB</td></tr>
<tr><td>AO11</td><td>2026-AC</td></tr>
</table></td></tr>
<tr><td>21</td><td>RS-485 analog output</td><td>For RS-485 (InnerCOM / Modbus) control analog output
<table>
<tr><th>Terminal</th><th>Address</th></tr>
<tr><td>AFM1</td><td>26A0H</td></tr>
<tr><td>AFM2</td><td>26A1H</td></tr>
<tr><td>AO10</td><td>26AAH</td></tr>
<tr><td>AO11</td><td>26ABH</td></tr>
</table></td></tr>
</table>

Settings	Functions	Descriptions
22	Communication card analog output	For communication analog output (CMC-EIP01, CMC-PN01, CMC-DN01) Terminal / Address AFM1 / 26A0H AFM2 / 26A1H AO10 / 26AAH AO11 / 26ABH
23	Constant voltage output	Pr.03-32 and Pr.03-33 control the voltage output level. 0–100% of Pr.03-32 corresponds to 0–10 V of AFM1.
25	CANopen and RS-485 analog output	For CANopen and InnerCOM control output

03-21 AFM1 Analog Output Gain 1

Default: 100.0

03-24 AFM2 Analog Output Gain 2

Default: 100.0

Settings 0.0–500.0%

Adjusts the voltage level outputted to the analog meter from the analog signal (Pr.03-20) output terminal AFM of the drive.

03-22 AFM1 Analog Output 1 in REV Direction

Default: 0

03-25 AFM2 Analog Output 2 in REV Direction

Default: 0

Settings 0: Absolute value in output voltage
1: Reverse output 0 V; forward output 0–10 V
2: Reverse output 5–0 V; forward output 5–10 V

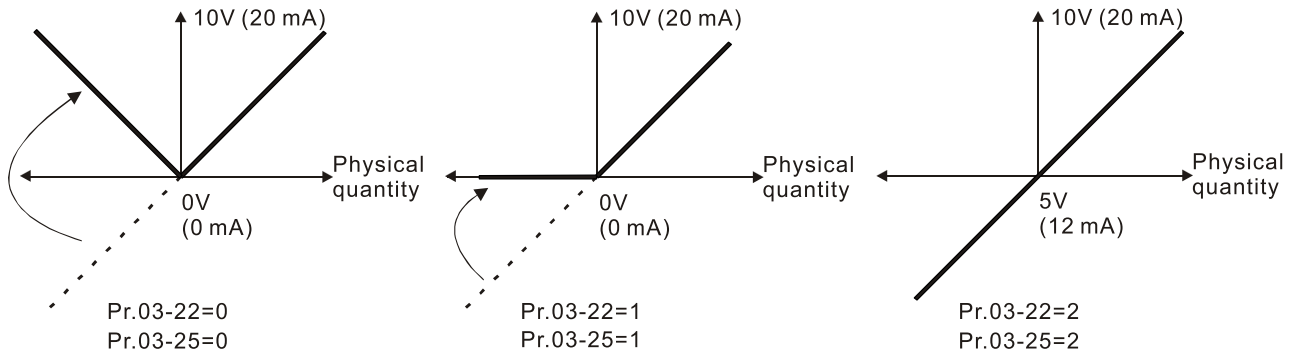

Selections for the analog output direction

03-27 AFM2 Output Bias

Default: 0.00

Settings -100.00–100.00%

Example 1, AFM2 0–10 V is set to the output frequency, the output equation is:
10 V × (output frequency / Pr.01-00) × Pr.03-24 + 10 V × Pr.03-27

- Example 2, AFM2 0–20 mA is set to the output frequency, the output equation is:
  20 mA × (output frequency / Pr.01-00) × Pr.03-24 + 20 mA × Pr.03-27
- Example 3, AFM2 4–20 mA is set to the output frequency, the output equation is:
  4 mA + 16 mA × (output frequency / Pr.01-00) × Pr.03-24 + 16 mA × Pr.03-27
- This parameter sets the corresponding voltage of the analog output 0.

03-28 AVI Terminal Input Selection

Default: 0

Settings 0: 0–10 V
1: 0–20 mA
2: 4–20 mA

03-29 ACI Terminal Input Selection

Default: 0

Settings 0: 4–20 mA
1: 0–10 V
2: 0–20 mA

- When you change the input mode, verify that the external terminal switch (SW3, SW4) corresponds to the setting for Pr.03-28–Pr.03-29.
- When you change the setting, proportion to the corresponding AVI and ACI will change to default.

03-30 PLC Analog Output Terminal Status

Default: Read only

Settings Monitor the status of the PLC analog output terminals

- Pr.03-30 displays the external multi-function output terminal that used by PLC.

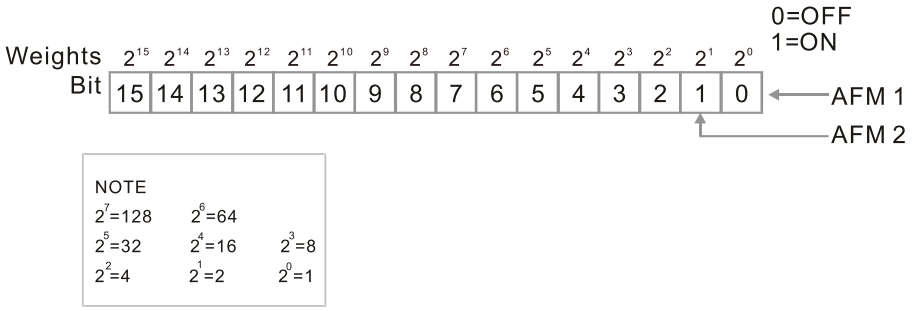

- For Example:
  When Pr.03-30 displays 0002h (hex), it means that AFM2 is used by PLC.

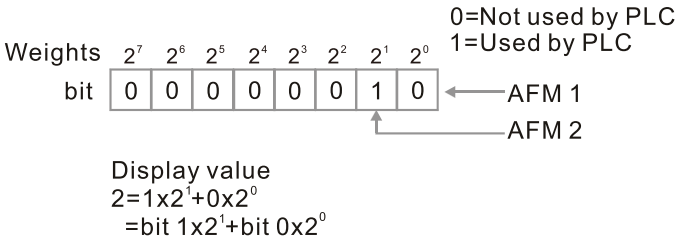

03-31 AFM2 Output Selection

Default: 0

Settings 0: 0–20 mA output
1: 4–20 mA output

03-32 AFM1 DC Output Setting Level

03-33 AFM2 DC Output Setting Level

Default: 0.00

Settings 0.00–100.00%

03-35 AFM1 Output Filter Time

03-36 AFM2 Output Filter Time

Default: 0.01

Settings 0.00–20.00 sec.

03-44 Multi-function Output (MO) by AI Level Source

Default: 0

Settings 0: AVI
1: ACI
2: AUI

03-45 AI Upper Level (MO)

Default: 50.00

Settings -100.00–100.00%

03-46 AI Lower Level (MO)

Default: 10.00

Settings -100.00–100.00%

- Use this function (Pr.03-44) with the multi-function output setting 67 (analog input level reached). The MO is active when the AI input level is higher than the Pr.03-45. The MO is disabled when the AI input is lower than the Pr.03-46.
- When setting levels, Pr.03-45 AI upper level must be higher than Pr.03-46 AI lower level.

03-50 Analog Input Curve Selection

Default: 0

Settings 0: Normal Curve
1: Three-point curve of AVI
2: Three-point curve of ACI
3: Three-point curve of AVI & ACI
4: Three-point curve of AUI
5: Three-point curve of AVI & AUI
6: Three-point curve of ACI & AUI
7: Three-point curve of AVI & ACI & AUI

- Sets the calculation method for analog input.
- When Pr.03-50 = 0, all analog input signal is calculated by bias and gain.
- When Pr.03-50 = 1, AVI calculates by frequency and voltage / current (Pr.03-51–03-56), other

analog input signal calculates by bias and gain.

- When Pr.03-50 = 2, ACI consulates by frequency and voltage / current (Pr.03-57–03-62), other analog input signal calculates by bias and gain.
- When Pr.03-50 = 3, AVI and ACI calculate by frequency and voltage/ current (Pr.03-51–03-62), other analog input signal calculates by bias and gain.
- When Pr.03-50 = 4, AVI calculates by frequency and voltage / current (Pr.03-63–03-74), other analog input signal calculates by bias and gain.
- When Pr.03-50 = 5, AVI and AUI calculate by frequency and voltage / current (Pr.03-51–03-56 and 03-63–03-74), other analog input signal calculates by bias and gain.
- When Pr.03-50 = 6, ACI and AVI calculate by frequency and voltage / current (Pr.03-57–03-74), other analog input signal calculates by bias and gain.
- When Pr.03-50 = 7, all analog input signal calculate by frequency and voltage / current (Pr.03-51–03-74).

03-51 AVI Lowest Point

Default: 0.00 / 0.00 / 4.00

Settings Pr.03-28 = 0, 0.00–10.00 V
Pr.03-28 = 1, 0.00–20.00 mA
Pr.03-28 = 2, 4.00–20.00 mA

03-52 AVI Proportional Lowest Point

Default: 0.00

Settings -100.00–100.00%

03-53 AVI Mid-Point

Default: 5.00 / 10.00 / 12.00

Settings Pr.03-28 = 0, 0.00–10.00 V
Pr.03-28 = 1, 0.00–20.00 mA
Pr.03-28 = 2, 4.00–20.00 mA

03-54 AVI Proportional Mid-Point

Default: 50.00

Settings -100.00–100.00%

03-55 AVI Highest Point

Default: 10.00 / 20.00 / 20.00

Settings Pr.03-28 = 0, 0.00–10.00 V
Pr.03-28 = 1, 0.00–20.00 mA
Pr.03-28 = 2, 4.00–20.00 mA

03-56 AVI Proportional Highest Point

Default: 100.00

Settings -100.00–100.00%

- When Pr.03-28 = 0, the AVI setting is 0–10 V and the unit is in voltage (V).
- When Pr.03-28 ≠ 0, the AVI setting is 0–20 mA or 4–20 mA and the unit is in current (mA).
- When you set the analog input AVI to frequency command, 100% corresponds to Fmax (Pr.01-00 Maximum Operation Frequency).

- The requirement for these three parameters (Pr.03-51, Pr.03-53 and Pr.03-55) is Pr.03-51 < Pr.03-53 < Pr.03-55. The values for three proportional points (Pr.03-52, Pr.03-54 and Pr.03-56) have no limits. Values between two points are calculated by a linear equation. The ACI and AUI are same as AVI.
- The output percentage 0% when the AVI input value is lower than the lowest point setting. Example: Pr.03-51 = 1 V; Pr.03-52 = 10%. The output is 0 % when AVI input is lower than 1V. If the AVI input varies between 1V and 1.1V, the drive's output frequency is between 0% and 10%.
- When Pr.03-28 = 2 (AVI terminal input selection = 4–20 mA) and Pr.03-29 = 0 (ACI terminal input selection = 4–20 mA), the ACI input range for Pr.03-51 (AVI lowest point) and Pr.03-57 (ACI lowest point) is 0–20 mA. However, the drive frequency output remains 4 mA when the ACI input is lower than 4 mA.
- The drive remains at the lowest percentage when the input is lower than the lowest point, same as the action when input higher than the highest point.

Pr.03-51=0V; Pr.03-52=0%
Pr.03-53=5V; Pr.03-54=50%
Pr.03-55=10V; Pr.03-56=100%

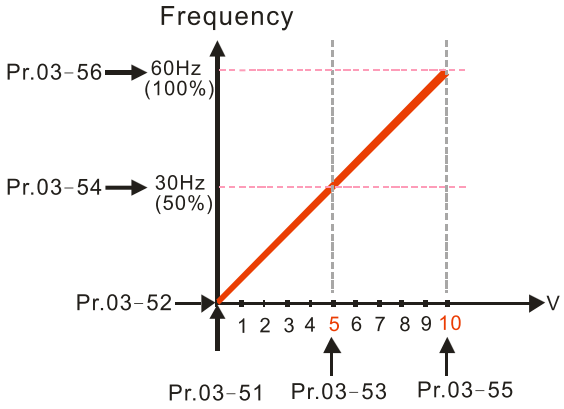

Pr.03-51=0V; Pr.03-52=100%
Pr.03-53=5V; Pr.03-54=50%
Pr.03-55=10V; Pr.03-56=0%

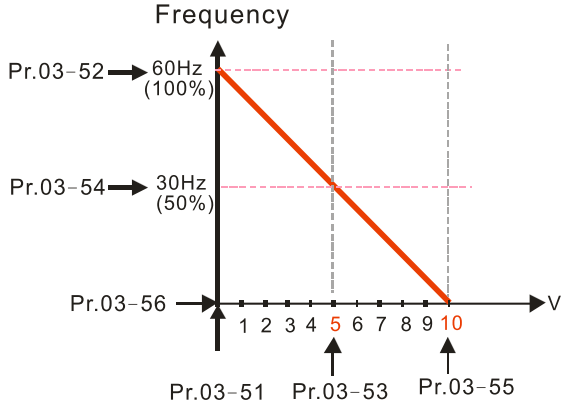

Pr.03-51=1V; Pr.03-52=10%
Pr.03-53=5V; Pr.03-54=50%
Pr.03-55=10V; Pr.03-56=100%

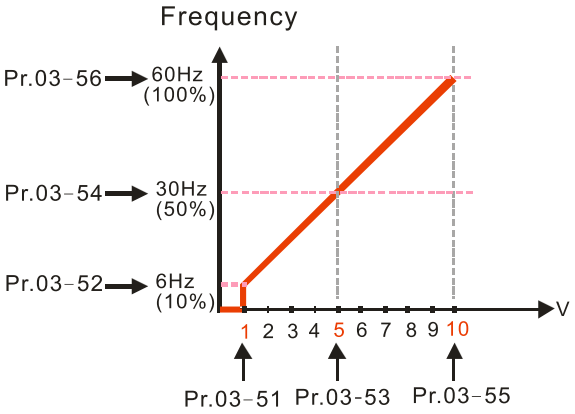

Pr.03-51=1V; Pr.03-52=10%
Pr.03-53=5V; Pr.03-54=50%
Pr.03-55=9V; Pr.03-56=100%

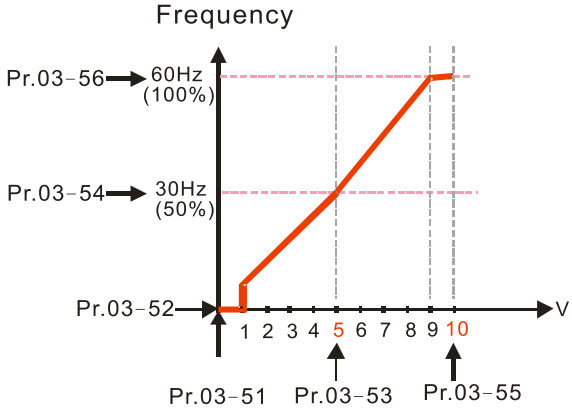

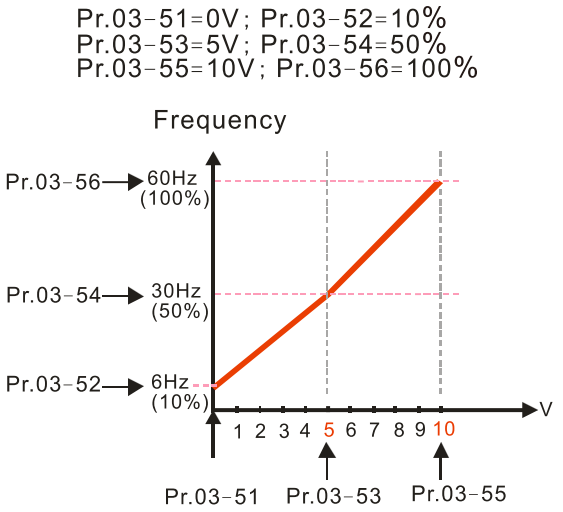

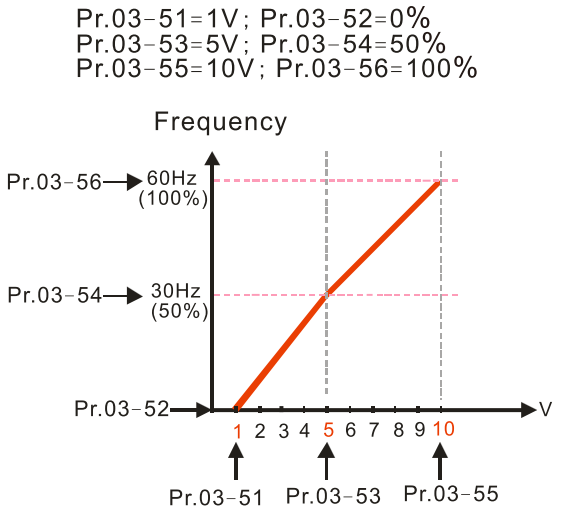

03-57 ACI Lowest Point

Default: 4.00 / 0.00 / 0.00

Settings Pr.03-29 = 0, 4.00–20.0 mA
Pr.03-29 = 1, 0.00–10.00 V
Pr.03-29 = 2, 0.00–20.00 mA

03-58 ACI Proportional Lowest Point

Default: 0.00

Settings -100.00–100.00%

03-59 ACI Mid-Point

Default: 12.00 / 5.00 / 10.00

Settings Pr.03-29 = 0, 4.00–20.00 mA
Pr.03-29 = 1, 0.00–10.00 V
Pr.03-29 = 2, 0.00–20.00 mA

03-60 ACI Proportional Mid-Point

Default: 50.00

Settings -100.00–100.00%

03-61 ACI Highest Point

Default: 20.00 / 10.00 / 20.00

Settings Pr.03-29 = 0, 4.00–20.00 mA
Pr.03-29 = 1, 0.00–10.00 V
Pr.03-29 = 2, 0.00–20.00 mA

03-62 ACI Proportional Highest Point

Default: 100.00

Settings -100.00–100.00%

- When Pr.03-29 = 1, the ACI setting is 0–10 V and the unit is in voltage (V).
  When Pr.03-29 ≠ 1, the ACI setting is 0–20 mA or 4–20 mA and the unit is in current (mA).
- When you set the analog input ACI to the Frequency command, 100% corresponds to Fmax (Pr.01-00 Maximum Operation Frequency).
- The requirement for these three parameters (Pr.03-57, Pr.03-59 and Pr.03-61) is Pr.03-57 < Pr.03-59 < Pr.03-61. The values for three proportional points (Pr.03-58, Pr.03-60 and Pr.03-62)

have no limits. There is a linear calculation between two points.

- The output percentage becomes 0% when the ACI input value is lower than the lowest point setting.
- Example:
  Pr.03-57 = 2 mA; Pr.03-58 = 10%, then the output becomes 0% when the AVI input is ≤ 2 mA. If the ACI input swings between 2 mA and 2.1 mA, the drive's output frequency oscillates between 0% and 10%.

03-63 Positive AUI Voltage Lowest Point

Default: 0.00

Settings 0.00–10.00 V

03-64 Positive AUI Voltage Proportional Lowest Point

Default: 0.00

Settings -100.00–100.00%

03-65 Positive AUI Voltage Mid-Point

Default: 5.00

Settings 0.00–10.00 V

03-66 Positive AUI Voltage Proportional Mid-Point

Default: 50.00

Settings -100.00–100.00%

03-67 Positive AUI Voltage Highest Point

Default: 10.00

Settings 0.00–10.00 V

03-68 Positive AUI Voltage Proportional Highest Point

Default: 100.00

Settings -100.00–100.00%

- When you set the positive voltage AUI to the Frequency command, 100% corresponds to Fmax (Pr.01-00 Maximum Operation Frequency) and the motor runs in the forward direction.
- The requirement for these three parameters (Pr.03-63, Pr.03-65 and Pr.03-67) is Pr.03-63 < Pr.03-65 < Pr.03-67. The values for three proportional points (Pr.03-64, Pr.03-66 and Pr.03-68) have no limits. There is a linear calculation between two points.
- The output percentage becomes 0% when the positive voltage AUI input value is lower than the lowest point setting.
  For example:
  If Pr.03-63 = 1 V; Pr.03-64 = 10%, then the output becomes 0% when the AUI input is ≤ 1V. If the AUI input swings between 1V and 1.1V, the drive's output frequency oscillates between 0% and 10%.
- Use Pr.03-51~03-68 to set the open circuit corresponding function of analog input value and max. operation frequency (Pr.01-00), as shown in the figure below:

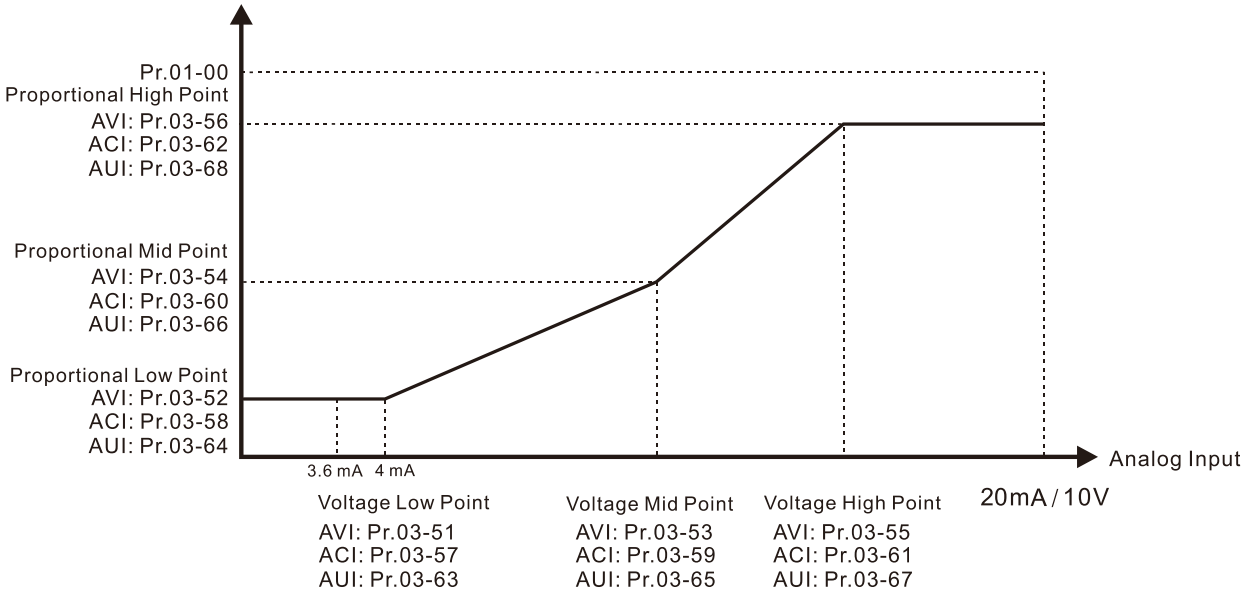

03-69 Negative AUI Voltage Highest Point

Default: 0.00

Settings -10.00–0.00 V

03-70 Negative AUI Voltage Proportional Highest Point

Default: 0.00

Settings -100.00–100.00%

03-71 Negative AUI Voltage Mid-Point

Default: -5.00

Settings -10.00–0.00 V

03-72 Negative AUI Voltage Proportional Mid-Point

Default: -50.00

Settings -100.00–100.00%

03-73 Negative AUI Voltage Lowest Point

Default: -10.00

Settings -10.00–0.00 V

03-74 Negative AUI Voltage Proportional Lowest Point

Default: -100.00

Settings -100.00–100.00%

- When you set the negative voltage AUI to the Frequency command, -100% corresponds to Fmax (Pr.01-00 Maximum Operation Frequency) and the motor runs in the reverse direction.
- The requirement for these three parameters (Pr.03-69, Pr.03-71 and Pr.03-73) is Pr.03-69 < Pr.03-71 < Pr.03-73. The values for three proportional points (Pr.03-70, Pr.03-72 and Pr.03-74) have not limits. There is a linear calculation between two points.
- The output percentage becomes 0% when the negative AUI input value is lower than the lowest point setting.

  For example:

  If Pr.03-69 = -1 V; Pr.03-70 = 10%, then the output becomes 0% when the AUI input is ≥ -1V. If the AUI input swings] between -1 V and -1.1 V, the drive's output frequency oscillates between 0% and 10%.

04 Multi-step Speed Parameters

✓ You can set this parameter during operation.

✓	04-00	1st Step Speed Frequency
✓	04-01	2nd Step Speed Frequency
✓	04-02	3rd Step Speed Frequency
✓	04-03	4th Step Speed Frequency
✓	04-04	5th Step Speed Frequency
✓	04-05	6th Step Speed Frequency
✓	04-06	7th Step Speed Frequency
✓	04-07	8th Step Speed Frequency
✓	04-08	9th Step Speed Frequency
✓	04-09	10th Step Speed Frequency
✓	04-10	11th Step Speed Frequency
✓	04-11	12th Step Speed Frequency
✓	04-12	13th Step Speed Frequency
✓	04-13	14th Step Speed Frequency
✓	04-14	15th Step Speed Frequency

Default: 0.00

Settings 0.00–599.00 Hz

📖 Use the multi-function input terminals (refer to settings 1–4 of Pr.02-01–02-08 and Pr.02-26– 02-31 Multi-function Input Command) to select the multi-step speed command (the maximum is 15th step speed). Pr.04-00 to Pr.04-14 set the multi-step speed (frequency) as shown in the following diagram.

📖 The external terminal / digital keypad / communication controls the RUN and STOP commands with Pr.00-21.

📖 You can set each multi-step speed between 0.00–599.00 Hz during operation.

Explanation for the timing diagram of the multi-step speed and external terminals.

The related parameter settings are:

1. Pr.04-00–Pr.04-14: sets the 1st–15th multi-step speed (to set the frequency of each step speed)
2. Pr.02-01–Pr.02-08 and Pr.02-26–Pr.02-31: sets the multi-function input terminals (multi-step speed command 1–4)

📖 Related parameters:

- Pr.01-22 JOG Frequency
- Pr.02-01 Multi-function Input Command 1 (MI1)
- Pr.02-02 Multi-function Input Command 2 (MI2)
- Pr.02-03 Multi-function Input Command 3 (MI3)
- Pr.02-04 Multi-function Input Command 4 (MI4)

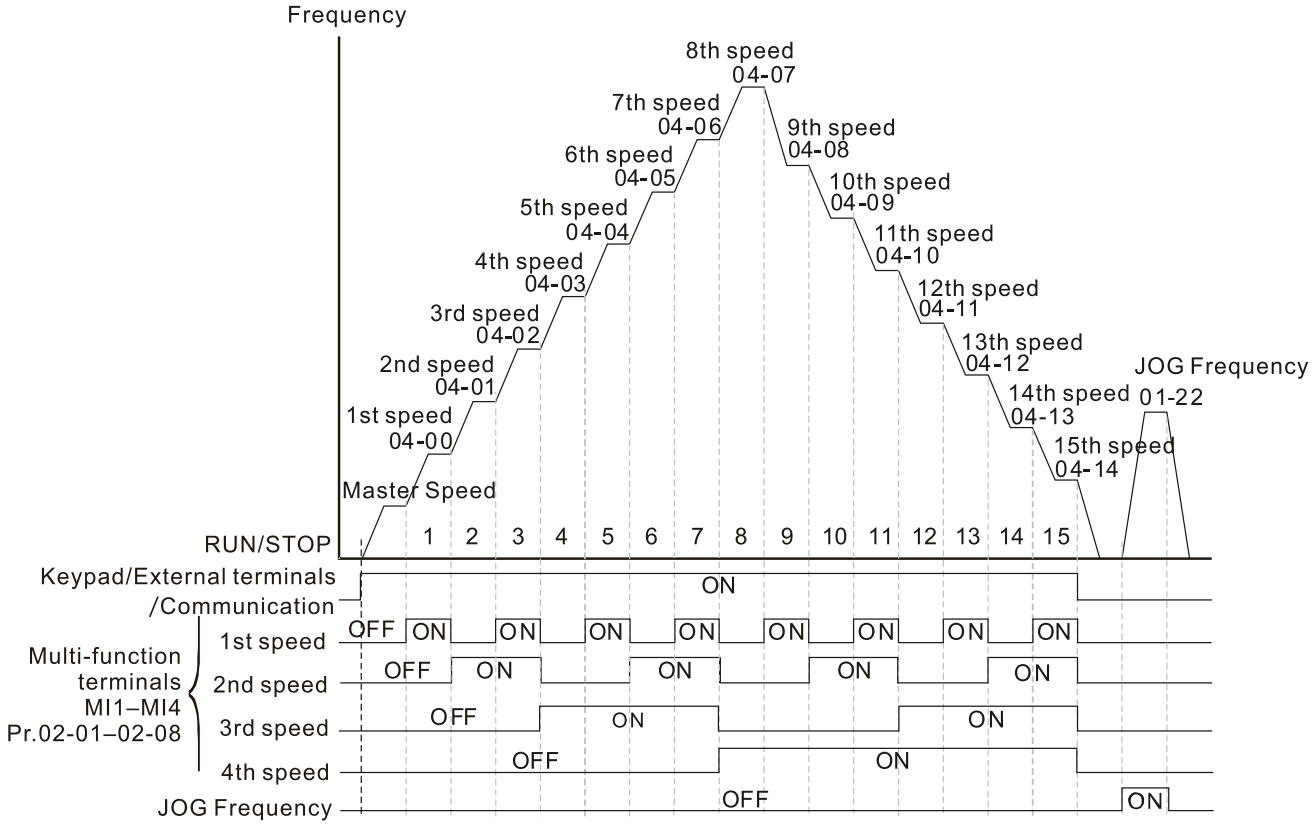

Multi-speed via External Terminals

Related parameters for speed limit:

- Pr.02-01 Multi-function Command 1 (MI95)
- Pr.02-02 Multi-function Command 2 (MI96)
- Pr.02-03 Multi-function Command 3 (MI97)
- Pr.02-04 Multi-function Command 4 (MI98)

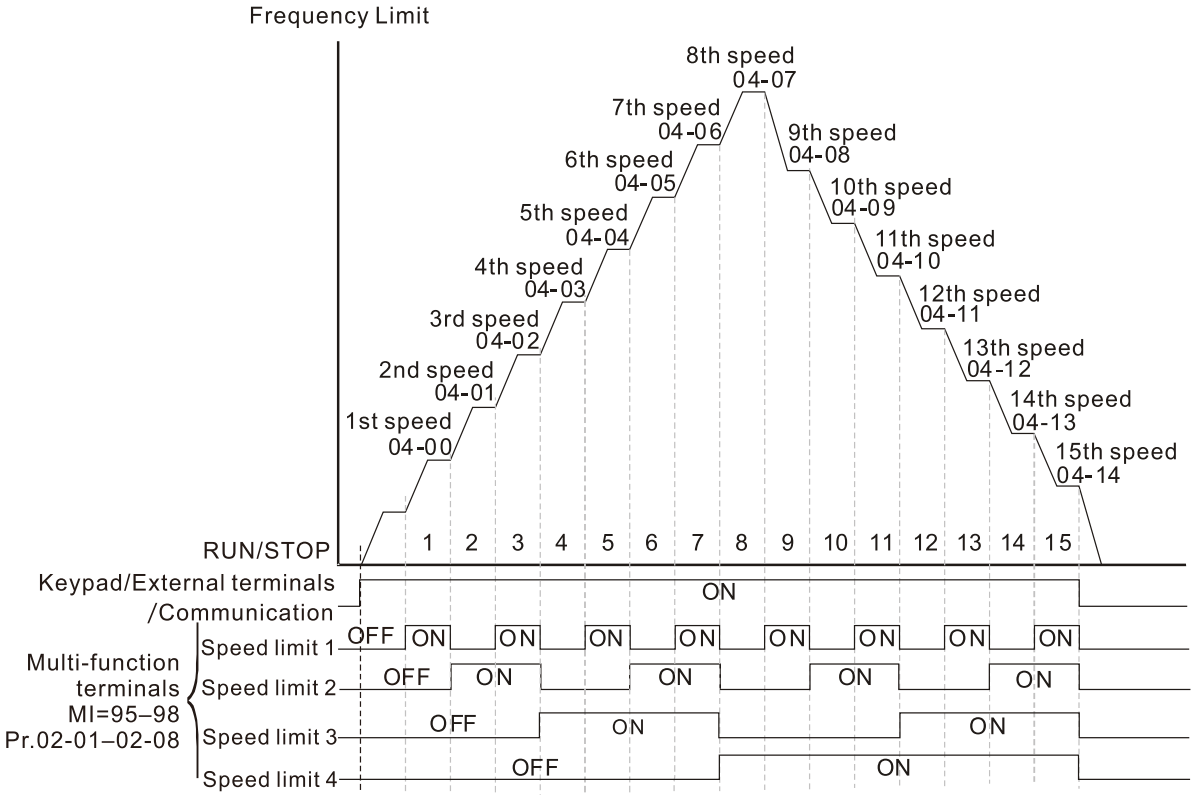

Multi-speed via External Terminals

✓	04-15	Position Command 1 (Rotation)
✓	04-17	Position Command 2 (Rotation)
✓	04-19	Position Command 3 (Rotation)
✓	04-21	Position Command 4 (Rotation)
✓	04-23	Position Command 5 (Rotation)
✓	04-25	Position Command 6 (Rotation)
✓	04-27	Position Command 7 (Rotation)
✓	04-29	Position Command 8 (Rotation)
✓	04-31	Position Command 9 (Rotation)
✓	04-33	Position Command 10 (Rotation)
✓	04-35	Position Command 11 (Rotation)
✓	04-37	Position Command 12 (Rotation)
✓	04-39	Position Command 13 (Rotation)
✓	04-41	Position Command 14 (Rotation)
✓	04-43	Position Command 15 (Rotation)

Default: 0

Settings -30000–30000

✓	04-16	Position Command 1 (Pulse)
✓	04-18	Position Command 2 (Pulse)
✓	04-20	Position Command 3 (Pulse)
✓	04-22	Position Command 4 (Pulse)
✓	04-24	Position Command 5 (Pulse)
✓	04-26	Position Command 6 (Pulse)
✓	04-28	Position Command 7 (Pulse)
✓	04-30	Position Command 8 (Pulse)
✓	04-32	Position Command 9 (Pulse)
✓	04-34	Position Command 10 (Pulse)
✓	04-36	Position Command 11 (Pulse)
✓	04-38	Position Command 12 (Pulse)
✓	04-40	Position Command 13 (Pulse)
✓	04-42	Position Command 14 (Pulse)
✓	04-44	Position Command 15 (Pulse)

Default: 0

Settings -32767–32767

- Switch the target position through external terminal, that is, set the multi-function input commands MI1 to MI4 (Pr.02-01 = 1, Pr.02-02 = 2, Pr.02-03 = 3, and Pr.02-04 = 4), and determine the multi-step position control target position using the multi-step speed.
- Setting method: Target Position = Pr.04-15 × (Pr.10-01 × 4) + Pr.04-16

Multi-step Speed Status	Multi-step Position Control Target Position			Multi-step Position Control Maximum Speed	
0000	0			Pr.11-00 bit8=0	Pr.11-00 bit8=1
0001	Position 1	Pr.04-15	Pr.04-16	Pr.11-43	Pr.04-00
0010	Position 2	Pr.04-17	Pr.04-18		Pr.04-01
0011	Position 3	Pr.04-19	Pr.04-20		Pr.04-02
0100	Position 4	Pr.04-21	Pr.04-22		Pr.04-03
0101	Position 5	Pr.04-23	Pr.04-24		Pr.04-04
0110	Position 6	Pr.04-25	Pr.04-26		Pr.04-05
0111	Position 7	Pr.04-27	Pr.04-28		Pr.04-06
1000	Position 8	Pr.04-29	Pr.04-30	Pr.11-43	Pr.04-07
1001	Position 9	Pr.04-31	Pr.04-32		Pr.04-08
1010	Position 10	Pr.04-33	Pr.04-34		Pr.04-09
1011	Position 11	Pr.04-35	Pr.04-36		Pr.04-10
1100	Position 12	Pr.04-37	Pr.04-38		Pr.04-11
1101	Position 13	Pr.04-39	Pr.04-40		Pr.04-12
1110	Position 14	Pr.04-41	Pr.04-42		Pr.04-13
1111	Position 15	Pr.04-43	Pr.04-44		Pr.04-14

04-50	PLC Buffer 0
04-51	PLC Buffer 1
04-52	PLC Buffer 2
04-53	PLC Buffer 3
04-54	PLC Buffer 4
04-55	PLC Buffer 5
04-56	PLC Buffer 6
04-57	PLC Buffer 7
04-58	PLC Buffer 8
04-59	PLC Buffer 9
04-60	PLC Buffer 10
04-61	PLC Buffer 11
04-62	PLC Buffer 12
04-63	PLC Buffer 13
04-64	PLC Buffer 14
04-65	PLC Buffer 15
04-66	PLC Buffer 16
04-67	PLC Buffer 17
04-68	PLC Buffer 18
04-69	PLC Buffer 19

Default: 0

Settings 0–65535

You can combine the PLC buffer with the built-in PLC function for a variety of applications.

04-70	PLC Application Parameter 0
04-71	PLC Application Parameter 1

✓	**04-72**	PLC Application Parameter 2
✓	**04-73**	PLC Application Parameter 3
✓	**04-74**	PLC Application Parameter 4
✓	**04-75**	PLC Application Parameter 5
✓	**04-76**	PLC Application Parameter 6
✓	**04-77**	PLC Application Parameter 7
✓	**04-78**	PLC Application Parameter 8
✓	**04-79**	PLC Application Parameter 9
✓	**04-80**	PLC Application Parameter 10
✓	**04-81**	PLC Application Parameter 11
✓	**04-82**	PLC Application Parameter 12
✓	**04-83**	PLC Application Parameter 13
✓	**04-84**	PLC Application Parameter 14
✓	**04-85**	PLC Application Parameter 15
✓	**04-86**	PLC Application Parameter 16
✓	**04-87**	PLC Application Parameter 17
✓	**04-88**	PLC Application Parameter 18
✓	**04-89**	PLC Application Parameter 19
✓	**04-90**	PLC Application Parameter 20
✓	**04-91**	PLC Application Parameter 21
✓	**04-92**	PLC Application Parameter 22
✓	**04-93**	PLC Application Parameter 23
✓	**04-94**	PLC Application Parameter 24
✓	**04-95**	PLC Application Parameter 25
✓	**04-96**	PLC Application Parameter 26
✓	**04-97**	PLC Application Parameter 27
✓	**04-98**	PLC Application Parameter 28
✓	**04-99**	PLC Application Parameter 29

Default: 0

Settings 0–65535

📖 Pr.04-70–Pr.04-99 are user-defined parameters. You can combine these 30 PLC Application Parameters with the PLC programming for a variety of applications.

[This page intentionally left blank]

05 Motor Parameters

The following are abbreviations for different types of motors:

- IM: Induction motor
- PM: Permanent magnet synchronous AC motor
- IPM: Interior permanent magnet synchronous AC motor
- SPM: Surface permanent magnet synchronous AC motor
- SynRM: Synchronous reluctance motor

✎ You can set this parameter during operation.

05-00 Motor Parameter Auto-Tuning

Default: 0

Settings
0: No function
1: Simple rolling auto-tuning for induction motor (IM)
2: Static auto-tuning for induction motor
4: Dynamic test for PM magnetic pole (with the running in forward direction)
5: Rolling auto-tuning for PM (IPM / SPM)
6: Advanced rolling auto-tuning for IM flux curve
11: SynRM parameter auto-tuning
12: FOC Sensorless inertia estimation
13: Static auto-tuning for PM

📖 Refer to Section 12-2 “Adjustment and Application” for more details of motor adjustment process.

05-01 Full-load Current for Induction Motor 1 (A)

Default: Depending on the model power

Settings Depending on the model power

📖 Sets this value according to the rated current of the motor as indicated on the motor nameplate.

📖 The default is 90% of the drive’s rated current.
Example: The rated current for a 7.5 HP (5.5 kW) is 25 A. The default is 22.5 A.
The setting range is between 40–120% of the rated current.
(25 × 40% = 10 A and 25 × 120% = 30 A)

✎ 05-02 Rated Power for Induction Motor 1 (kW)

Default:
Depending on the model power

Settings 0.00–655.35 kW

📖 Sets the rated power for motor 1. The default is the drive’s power value.

✎ 05-03 Rated Speed for Induction Motor 1 (rpm)

Default: Depending on the motor’s number of poles

Settings 0–xxxx rpm (Depending on the motor’s number of poles)

📖 Sets the rated speed for the motor as indicated on the motor nameplate.

📖 Pr.01-01 and Pr.05-04 determine the maximum rotor speed for IM.
For example: Pr.01-01 = 20 Hz, Pr.05-04 = 2, according to the equation 120 × 20 Hz / 2 = 1200 rpm and take integers. Due to the slip of the IM, the maximum setting value for Pr.05-03 is 1199 rpm (1200 rpm – 1).

05-04 Number of Poles for Induction Motor 1

Default: 4

Settings 2–64

📖 Sets the number poles for the motor (must be an even number).

📖 Set up Pr.01-01 and Pr.05-03 before setting up Pr.05-04 to make sure the motor operates normally. Pr.01-01 and Pr.05-03 determine the maximum set up number poles for the IM.
For example: Pr.01-01 = 20 Hz and Pr.05-03 = 39 rpm, according to the equation 120 × 20 Hz ÷ 39 rpm = 61.5 and take even number, the number of poles is 60. Therefore, Pr.05-04 can be set to the maximum of 60 poles.

05-05 No-load Current for Induction Motor 1 (A)

Default:
Depending on the model power

Settings 0.00–Pr.05-01 default

📖 For model with 110 kW and above, default setting is 20% of motor rated current.

05-06 Stator Resistance (Rs) for Induction Motor 1

Default:
Depending on the model power

Settings 0.000–65.535 Ω

05-07 Rotor Resistance (Rr) for Induction Motor 1

Default:
Depending on the model power

Settings 0.000–65.535 Ω

05-08 Magnetizing Inductance (Lm) for Induction Motor 1

05-09 Stator Inductance (Lx) for Induction Motor 1

Default:
Depending on the model power

Settings 0.0–6553.5 mH

05-13 Full-load Current for Induction Motor 2 (A)

Default:
Depending on the model power

Settings Depending on the model power

📖 Set this value according to the rated current of the motor as indicated on the motor nameplate.
The default 90% of the drive's rated current.
Example: The rated current for a 7.5 HP (5.5 kW) motor is 25 A. The default is 22.5 A.
The setting range is between 40–120% of rated current.
25 × 40% = 10 A and 25 × 120% = 30 A

05-14 Rated Power for Induction Motor 2 (kW)

Default:
Depending on the model power

Settings 0.00–655.35 kW

Set the rated power for motor 2. The default is the drive's power value.

05-15 Rated Speed for Induction Motor 2 (rpm)

Default: Depending on the motor's number of poles

Settings 0–xxxx rpm (Depending on the motor's number of poles)

Sets the rated speed for the motor as indicated on the motor nameplate.

Pr.01-01 and Pr.05-04 determine the maximum rotor speed of IM.
For example: Pr.01-01 = 20 Hz, Pr.05-04 = 2, according to the equation 120 × 20 Hz ÷ 2 = 1200 rpm and take integers. Due to the slip of the IM, the maximum setting value for Pr.05-15 is 1199 rpm (1200 rpm – 1).

05-16 Number of Poles for Induction Motor 2

Default: 4

Settings 2–64

Sets the number of poles for the motor (must be an even number).

Set up Pr.01-35 and Pr.05-15 before setting up Pr.05-16 to make sure the motor operates normally. Pr.01-35 and Pr.05-15 determine the maximum set up number of poles.
For example: Pr.01-35 = 20 Hz and Pr.05-15 = 39 rpm, according to the equation 120 × 20 Hz ÷ 39 rpm = 61.5 and take even number, the number of poles is 60. Therefore, Pr.05-16 can be set to the maximum of 60 poles.

05-17 No-load Current for Induction Motor 2 (A)

Default:
Depending on the model power

Settings 0.00–Pr.05-13 default

For model with 110 kW and above, default setting is 20% of motor rated current.

05-18 Stator Resistance (Rs) for Induction Motor 2

Default:
Depending on the model power

Settings 0.000–65.535 Ω

05-19 Rotor Resistance (Rr) for Induction Motor 2

Default:
Depending on the model power

Settings 0.000–65.535 Ω

05-20 Magnetizing Inductance (Lm) for Induction Motor 2

05-21 Stator Inductance (Lx) for Induction Motor 2

Default:
Depending on the model power

Settings 0.0–6553.5 mH

05-22 Induction Motor 1/ 2 Selection

Default: 1

Settings 1: Motor 1
2: Motor 2

Sets the motor currently operated by the AC motor drive.

05-23 Frequency for Y-connection / Δ-connection Switch for an Induction Motor

Default: 60.00

Settings 0.00–599.00 Hz

05-24 Y-connection / Δ-connection Switch for Induction Motor

Default: 0

Settings 0: Disable
1: Enable

05-25 Delay Time for Y-connection / Δ-connection Switch for an Induction Motor

Default: 0.200

Settings 0.000–60.000 sec.

You can apply Pr.05-23–Pr.05-25 in a wide range of motors, and the motor coil executes the Y-connection / Δ-connection switch as required. The wide range motors are related to the motor design. In general, the motor has higher torque with low speed Y-connection, and has higher speed with high speed Δ-connection).

Pr.05-24 enables and disables the switch of Y-connection / Δ-connection.

When you set Pr.05-24 as 1, the drive uses the Pr.05-23 setting and current motor frequency, and switches the current motor to Y-connection or Δ-connection. You can switch the relevant motor parameter settings simultaneously.

Pr.05-25 sets the switch delay time of Y-connection / Δ-connection.

When the output frequency reaches Y-connection / Δ-connection switch frequency, the drive delays according to Pr.05-25 before activating the multi-function output terminals.

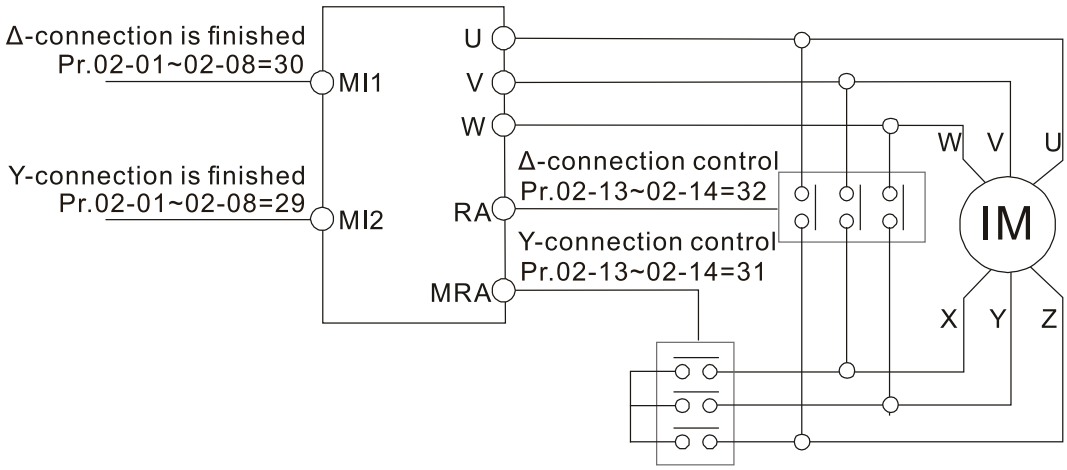

Y-Δ connection switch: can be used for wide range motor
Y-connection for low speed: higher torque can be used for rigid tapping
Δ-connection for high speed: higher torque can be used for high-speed drilling

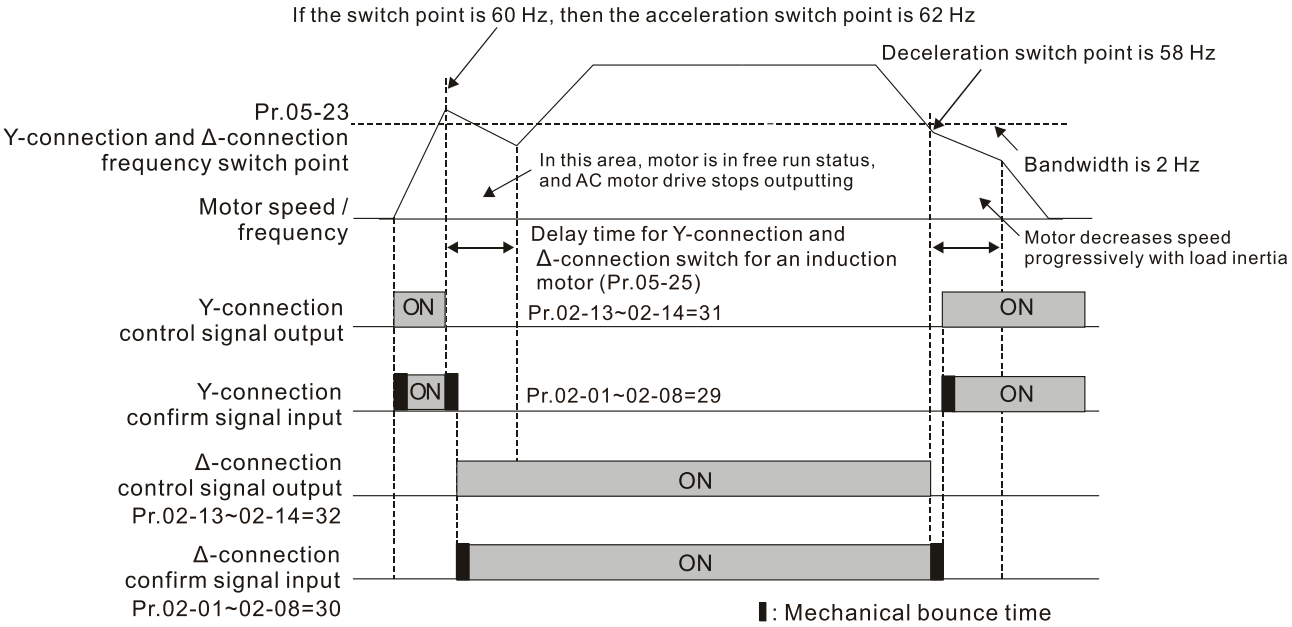

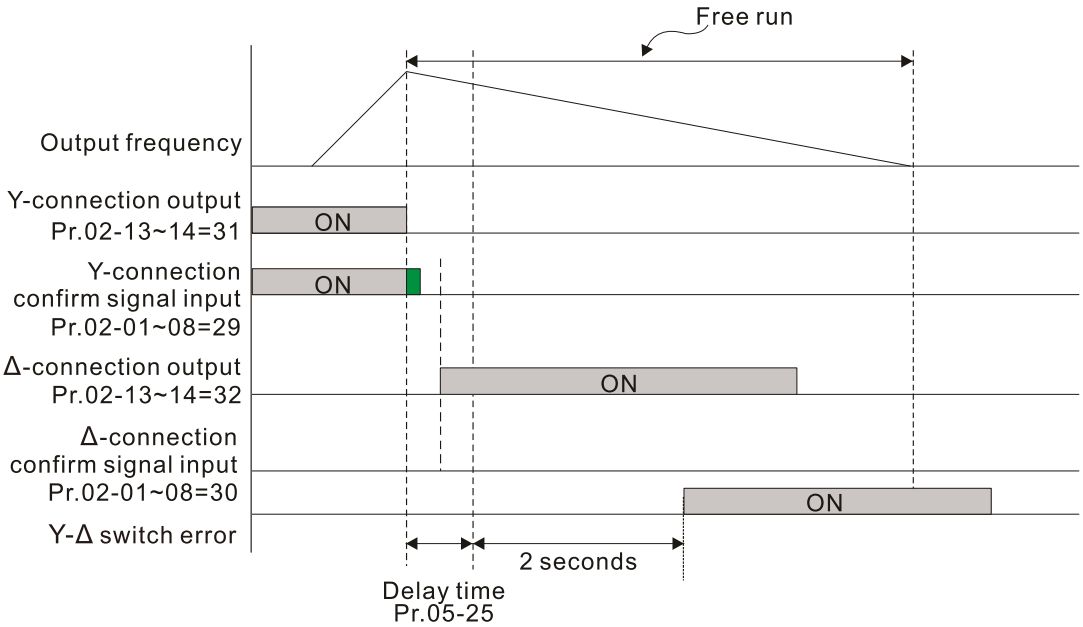

05-28 Accumulated Watt-hour for a Motor (W-hour)

Default: Read only

Settings 0.0–999.9

05-29 Accumulated Watt-hour for a Motor in Low Word (kW-hour)

Default: Read only

Settings 0.0–999.9

05-30 Accumulated Watt-hour for a Motor in High Word (MW-hour)

Default: Read only

Settings 0–65535

Pr.05-28–05-30 records the amount of power consumed by the motors. The accumulation begins when the drive is activated, and the record is saved when the drive stops or turns OFF. The amount of consumed watts continues to accumulate when the drive is activated again. To clear the accumulation, set Pr.00-02 as 5 to return the accumulation record to 0.

The accumulated total watts of the motor per hour = Pr.05-30 × 1000000 + Pr.05-29 × 1000 + Pr.05-28 Wh

Example: When Pr.05-30 = 76 MWh and Pr.05-29 = 999.9 kWh, Pr.05-28 = 999.9 Wh (or 0.9999 kWh), the accumulated total kilowatts of the motor per hour = 76 × 1000000 + 999.9 × 1000 + 999.9 = 76000000 + 999900 + 999.9 Wh = 77000899.9 Wh = 77000.8999 kWh

05-31 Accumulated Motor Operation Time (Minutes)

Default: 0

Settings 0–1439

05-32 Accumulated Motor Operation Time (Days)

Default: 0

Settings 0–65535

Use Pr.05-31 and Pr.05-32 to record the motor operation time. To clear the operation time, set Pr.05-31 and Pr.05-32 as 00. An operation time shorter than 60 seconds is not recorded.

05-33 Induction Motor (IM) or Permanent Magnet Synchronous AC Motor (PM) Selection

Default: 0

Settings 0: IM
1: SPM
2: IPM
3: SynRM

05-34 Full-load Current for a Permanent Magnet Synchronous AC Motor / Reluctance Motor

Default:
Depending on the model power

Settings Depending on the model power

Sets the full-load current for the motor according to motor's nameplate. The default is 90% of the drive's rated current.

For example: The rated current of a 7.5 HP (5.5 kW) is 25 A. The default is 22.5 A.
The setting range is between 40–120% of rated current.
25 × 40% = 10 A and 25 × 120% = 30 A

05-35 Rated Power for a Permanent Magnet Synchronous AC Motor / Reluctance Motor

Default:
Depending on the model power

Settings 0.00–655.35 kW

Sets the rated power for the permanent magnet synchronous motor. The default is the drive's power value.

05-36 Rated Speed for a Permanent Magnet Synchronous AC Motor / Reluctance Motor

Default: 2000

Settings 0–65535 rpm

05-37 Pole Number for a Permanent Magnet Synchronous AC Motor / Reluctance Motor

Default: 10

Settings 0–65535

05-38 System Inertia for a Permanent Magnet Synchronous AC Motor / Reluctance Motor

Default:
Depending on the motor power

Settings 0.0–6553.5 kg-cm^2

Default values are as below:

HP	kW	Default	HP	kW	Default	HP	kW	Default
1	0.7	3.0	30	22	308.0	215	160	4151.3
2	1.5	6.6	40	30	527.0	250	186	5012.1
3	2.2	15.8	50	37	866.0	300	224	6314.9
5	3.7	25.7	60	45	1082.0	375	280	6314.9
7	5.5	49.6	75	56	1267.6	425	317	6314.9
10	7.5	82.0	100	75	1515.0	475	354	6314.9
15	11	177.0	120	89	2025.8	600	447	6314.9
20	15	211.0	150	112	2447.8	650	485	6314.9
25	18	265.0	175	130	2871.4	750	559	6314.9

05-39 Stator Resistance for a Permanent Magnet Synchronous AC Motor / Reluctance Motor

Default: 0.000

Settings 0.000–65.535 Ω

05-40 Permanent Magnet Synchronous AC Motor Ld / Reluctance Motor

Default: 0.00 / 0.0

Settings 0.00–655.35 mH / 0.0–6553.5 mH

05-41 Permanent Magnet Synchronous AC Motor Lq / Reluctance Motor

Default: 0.00 / 0.0

Settings 0.00–655.35 mH / 0.0–6553.5 mH

05-42 PG Offset Angle for a Permanent Magnet Synchronous AC Motor / Reluctance Motor

Default: 0

Settings 0.0–360.0°

When you set Pr.05-00 as 4, the drive detects the offset angle and writes it into Pr.05-42.

05-43 Ke Parameter of a Permanent Magnet Synchronous AC Motor / Reluctance Motor

Default: 0

Settings 0–65535 V / krpm

Permanent magnet motor parameter Ke ($V_{phase, rms}$ / krpm)

When Pr.05-00 = 5, parameter Ke is calculated according to the motor's actual operation.

When Pr.05-00 = 13, parameter Ke is automatically calculated according to the motor power, current and rotor speed.

05-51 Motor Code

Default: 0

Settings 0–65535

You can auto input or manual input the motor code through Pr.05-51:

- Auto input: The motor code is obtained and automatically input to Pr.05-51 (as the following table of motor code) through the Tamagawa encoder (currently only support the Tamagawa encoder) after power on. Then the drive looks up the motor general parameters (refer to the general parameter table as below) and the motor specific parameters (refer to the following specific parameter table), and automatically writes into each parameter.
- Manual input: After manually input the motor code through Pr.05-51, the drive looks up the motor general parameters (refer to the following general motor parameter table) and motor specific parameters (refer to the specific motor parameter table below), and writes into each parameter.

Motor Code Table:

Motor Code	Motor Model Name	Power
2105	MSJ-LA2070E42E	7 kW
2106	MSJ-LA210AE42E	10 kW
2108	MSJ-LA201GE42E	16 kW
2109	MSJ-LA202AE42E	20 kW
2110	MSJ-LA202DE42E	23 kW
2111	MSJ-LA202GE42E	26 kW
2112	MSJ-LA263AE48E	30 kW

Motor General Parameter Table:

Pr.	Modbus	Parameter Name	Setting Value
00-10	000A	Control mode	0
00-11	000B	Speed control mode	4
00-13	000D	Torque mode control	1
00-37	0025	Over-modulation gain	110
01-00	0100	Maximum operation frequency	150
05-42	052A	PG offset angle for a permanent magnet synchronous AC motor / Reluctance motor Lq	90.0
10-00	0A00	Encoder type selection	8
10-01	0A01	Encoder pulses per revolution	32768
10-02	0A02	Encoder input type setting	1
10-36	0A24	AMR (Ki) gain	0.5
11-00	0B00	System control	8193
11-13	0B0D	PDFF gain value	0

Motor Specific Parameter Table:

Pr.	Modbus	Parameter Name
05-33	0521	Induction motor (IM) and permanent magnet synchronous AC motor (PM) selection
05-34	0522	Full-load current for a permanent magnet synchronous AC motor / Reluctance motor
05-35	0523	Rated power for a permanent magnet synchronous AC motor / Reluctance motor
05-36	0524	Rated speed for a permanent magnet synchronous AC motor/ Reluctance motor
05-37	0525	Number of poles for a permanent magnet synchronous AC motor / Reluctance motor
05-38	0526	System inertia for a permanent magnet synchronous AC motor / Reluctance motor
05-39	0527	Stator Resistance for a permanent magnet synchronous AC motor / Reluctance motor
05-40	0528	Permanent magnet synchronous AC motor / Reluctance motor Ld
05-41	0529	Permanent magnet synchronous AC motor / Reluctance motor Lq
05-43	052B	Ke parameter for a permanent magnet synchronous AC motor / Reluctance motor
11-01	0B01	Per-unit of system inertia
11-02	0B02	ASR1 / ASR2 switch frequency
11-03	0B03	ASR1 low-speed bandwidth
11-04	0B04	ASR2 High-speed bandwidth
11-05	0B05	Zero-speed bandwidth
11-14	0B0E	ASR output low pass filter time

[This page intentionally left blank]

06 Protection Parameters

✓ You can set this parameter during operation.

✓ 06-00 Low Voltage Level

		Default:
Settings	230V models:	
	Frame A–D: 150.0–220.0 V_{DC}	180.0
	Frame E and above: 190.0–220.0 V_{DC}	200.0
	460V models:	
	Frame A–D: 300.0–440.0 V_{DC}	360.0
	Frame E and above: 380.0–440.0 V_{DC}	400.0

📖 Sets the Low Voltage (Lv) level. When the DC bus voltage is lower than Pr.06-00, a Lv fault is triggered, and the drive stops output and the motor coasts to a stop.

📖 If the Lv fault is triggered during operation, the drive stops output and the motor coasts to a stop. There are three Lv faults: LvA (Lv during acceleration), Lvd (Lv during deceleration), and Lvn (Lv in constant speed) that are triggered according to the status of acceleration or deceleration. You must press RESET to clear the Lv fault. The drive automatically restarts if you set to restart after momentary power loss (refer to Pr.07-06 Restart after Momentary Power Loss and Pr.07-07 Allowed Power Loss Duration for details).

📖 If the Lv fault is triggered when the drive is in STOP status, the drive displays LvS (Lv during stop), which is not recorded, and the drive restarts automatically when the input voltage is higher than Pr.06-00 + Lv return level (as listed below).

Lv Return Level	230V	460V
Frame A–D	30 V_{DC}	60 V_{DC}
Frame E–H	40 V_{DC}	80 V_{DC}

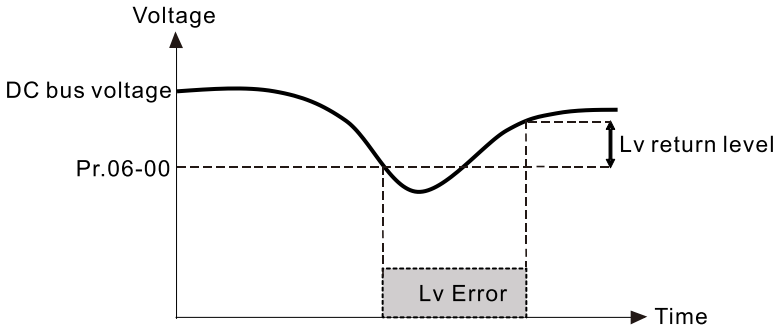

✓ 06-01 Over-voltage Stall Prevention

Default: 380.0 / 760.0

Settings 230V models: 0.0–450.0 V_{DC}
460V models: 0.0–900.0 V_{DC}
0: Disabled

📖 Setting Pr.06-01 to 0.0 disables the over-voltage stall prevention function (connected with braking unit or brake resistor). Use this setting when braking units or brake resistors are connected to the drive.

📖 Setting Pr.06-01 to a value > 0.0 enables the over-voltage stall prevention. This setting refers to the power supply system and loading. If the setting is too low, then over-voltage stall prevention is easily activated, which may increase the deceleration time.

Related parameters:

- Pr.01-13, Pr.01-15, Pr.01-17, Pr.01-19 Deceleration Time 1–4
- Pr.02-13–Pr.02-14 Multiple-function Output (Relay 1 and Relay 2)
- Pr.02-16–Pr.02-17 Multiple-function output (MO1 and MO2)
- Pr.06-02 Selection for Over-voltage Stall Prevention.

06-02 Selection for Over-voltage Stall Prevention

Default: 0

Settings 0: Traditional over-voltage stall prevention
1: Smart over-voltage stall prevention

Use this function when you are unsure about the load inertia. When stopping under normal load, the over-voltage does not occur during deceleration and meet the deceleration time setting. Sometimes it may not stop due to over-voltage during decelerating to STOP when the load regenerative inertia increases. In this case, the AC motor drive extends the deceleration time automatically until the drive stops.

Normal condition: DC bus < Pr.06-01 Over-voltage stall prevention

1. Pr.06-02 = 0:
   During deceleration, the motor exceeds the synchronous speed due to load inertia. In this case, the motor becomes an electrical generator. The DC bus voltage may exceed its maximum allowable value due to motor regeneration in some situations, such as motor's loading inertia being too high or drive's deceleration time being set too short. When you enable traditional over-voltage stall prevention and the DC bus voltage detected is too high, the drive stops decelerating (output frequency remains unchanged) until the DC bus voltage drops below the setting value.

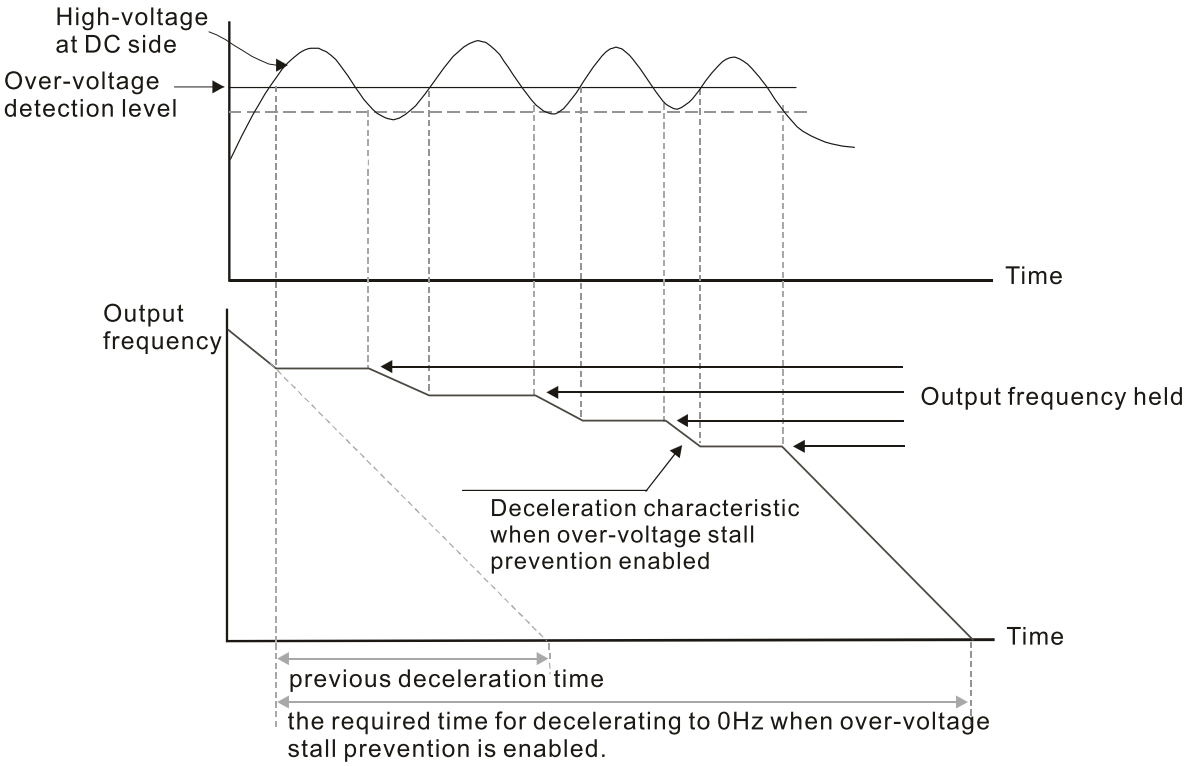

2. Pr.06-02 = 1:
   To use smart over-voltage stall prevention during deceleration, the drive maintains the DC bus voltage when decelerating and prevents the drive from ov.

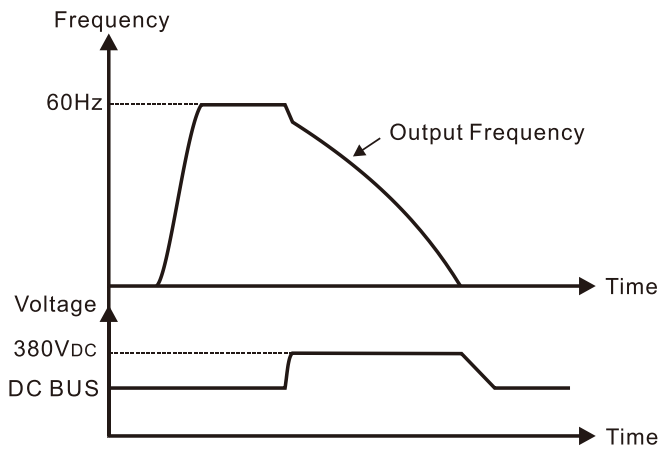

230V Series

- When you enable the over-voltage stall prevention, the drive's deceleration time is longer than the setting.
- If you encounter any problem with the deceleration time, refer to the following guides for troubleshooting.
  1. Increase the deceleration time to a proper value.
  2. Install a brake resistor (refer to Section 7-1 Brake Resistors and Brake Units Used in AC motor Drives for details) to dissipate the electrical energy that is regenerated from the motor.
- Abnormal condition: DC bus > Pr.06-01 Over-voltage stall prevention
  1. Pr.06-02 = 0:
     During deceleration, the drive maintains the DC bus voltage and slowly decrease the output frequency (which takes a long time to decelerate to 0 Hz).

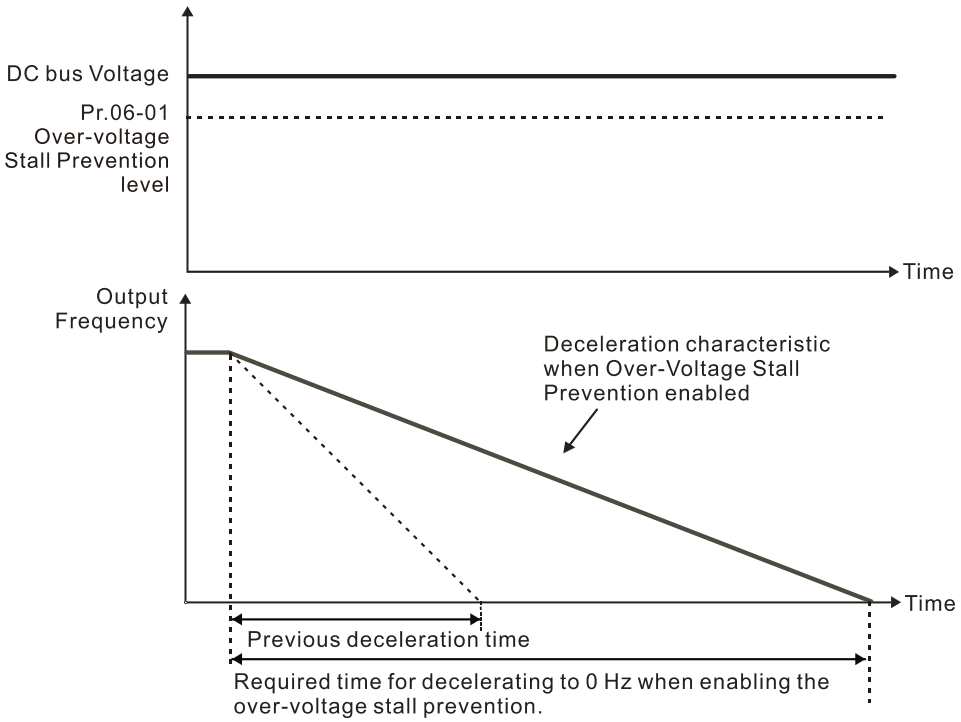

2. Pr.06-02 = 1:

   If you set Pr.06-01 to a small value that lower than the DC bus voltage, the drive maintains the DC bus voltage and the output frequency during deceleration. To prevent this situation, modify the Pr.06-01 setting to a value larger than the DC bus voltage (Pr.06-01 is able to be set during operation).

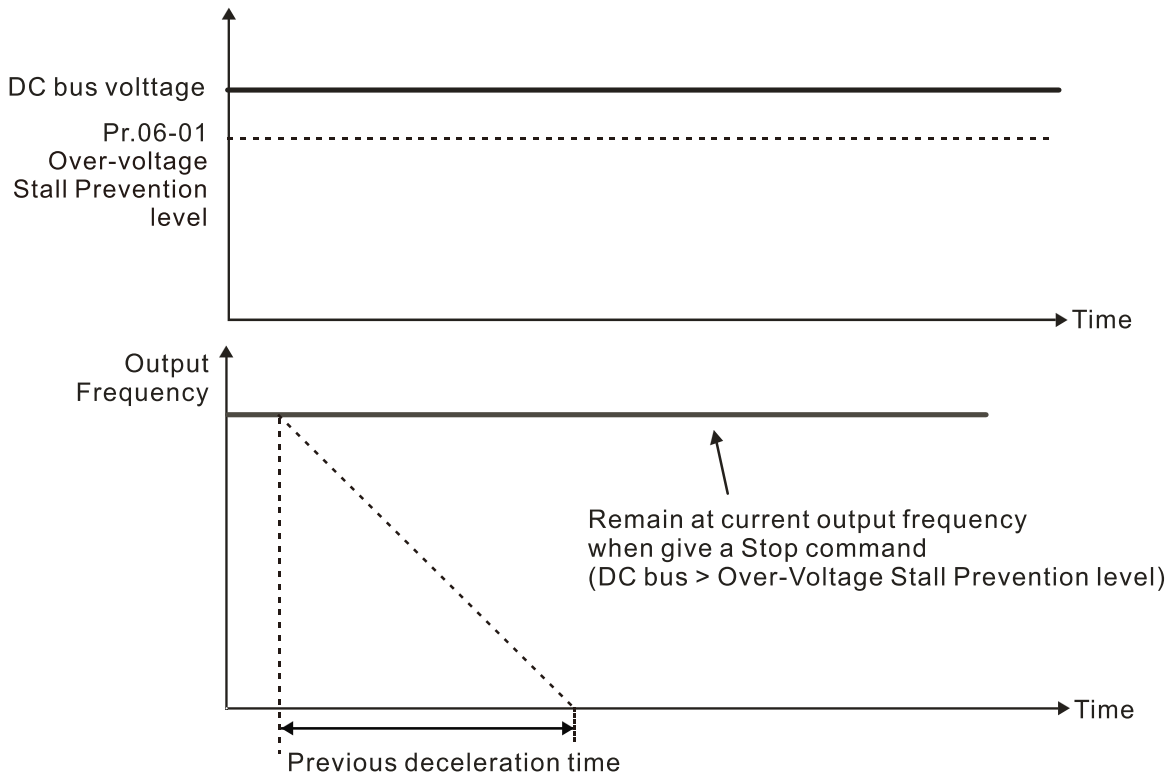

Related parameters:

- Pr.01-13, Pr.01-15, Pr.01-17, Pr.01-19 Deceleration Time 1–4
- Pr.02-13–Pr.02-14 Multiple-function Output (Relay 1 and Relay 2)
- Pr.02-16–Pr.02-17 Multiple-function Output (MO1 and MO2)
- Pr.06-01 Over-voltage Stall Prevention.

06-03 Over-current Stall Prevention during Acceleration

Default: 200

Settings Super heavy duty: 0–220% (100%: drive's rated current)

100% corresponds to the rated current of the drive (Pr.00-01).

This parameter only works in VF, VFPG, and SVC control mode.

If the motor load is too large or the drive's acceleration time is too short, the output current of the drive may be too high during acceleration, and it may cause motor damage or trigger the drive's protection functions (oL or oc). Use this parameter to prevent these situations.

During acceleration, the output current of the drive may increase abruptly and exceed the setting value of Pr.06-03. In this case, the drive stops accelerating and keeps the output frequency constant, and then continues to accelerate until the output current decreases.

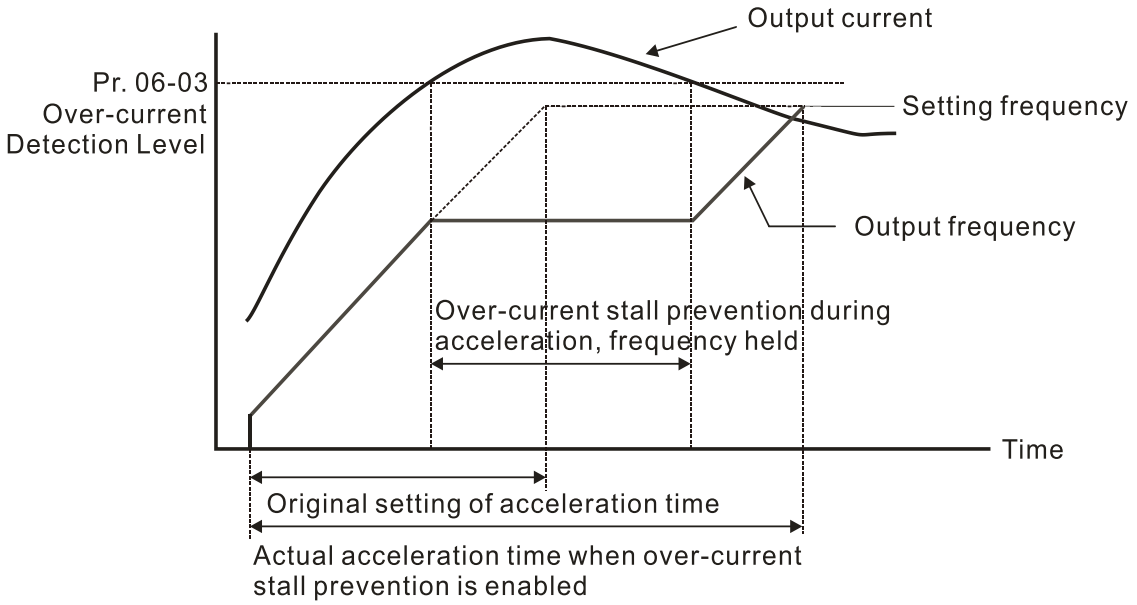

Refer to Pr.06-16 for more details of stall level in flux weakening region. The protection curve is as follows:

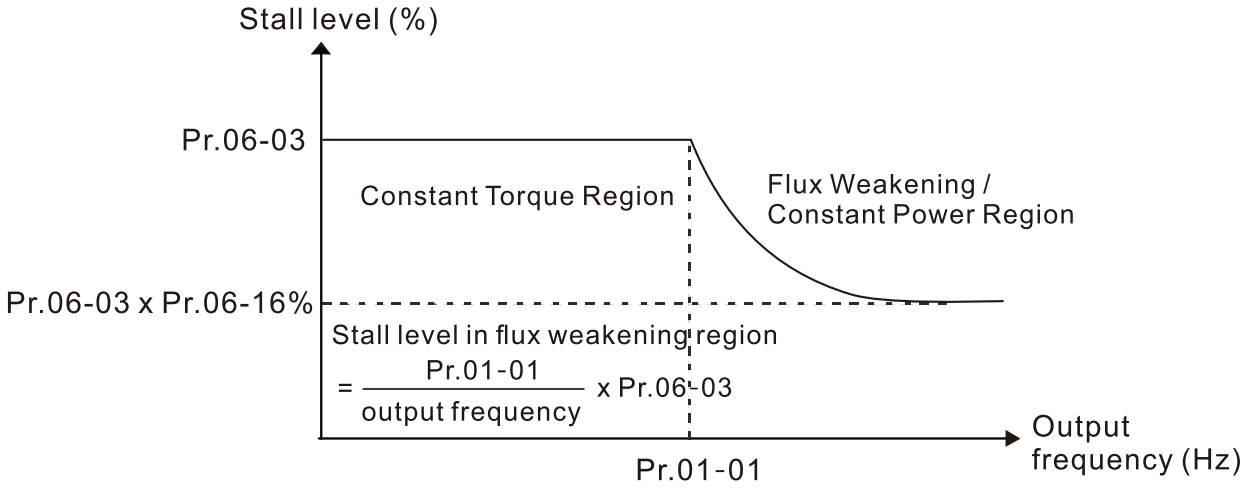

When you enable the over-current stall prevention, the drive's acceleration time is longer than the setting.

When the over-current stall prevention occurs because the motor capacity is too small or operates in the default, decrease the Pr.06-03 setting value.

If you encounter any problem with the acceleration time, refer to the following guides for troubleshooting.

1. Increase the acceleration time to a proper value.
2. Set Pr.01-44 Auto Acceleration and Auto-Deceleration Setting to 1, 3 or 4 (auto-acceleration).
3. Related parameters:
   - Pr.01-12, Pr.01-14, Pr.01-16, Pr.01-18 Acceleration Time 1–4
   - Pr.01-44 Auto Acceleration and Auto-Deceleration Setting
   - Pr.02-13–02-14 Multi-function Output 1 (Relay 1 and Relay 2)
   - Pr.02-16–02-17 Multi-function Output (MO1 and MO2)

06-04 Over-current Stall Prevention during Operation

Default: 200

Settings Super heavy duty: 0–220% (100%: drive's rated current)

- 100% corresponds to the rated current of the drive (Pr.00-01).
- This parameter only works in VF, VFPG, and SVC control modes.
- This is a protection for the drive to decrease output frequency automatically when the motor over-loads abruptly during constant motor operation.
- If the output current exceeds the setting value for Pr.06-04 when the drive is operating, the drive decelerates according to the Pr.06-05 setting to prevent the motor from stalling. The lower limit for the over-current stall prevention is determined by the maximum value among 0.5 Hz, Pr.01-07 and Pr.01-11.
- If the output current is lower than the setting value for Pr.06-04, the drive accelerates (according to Pr.06-05) again to the setting frequency.

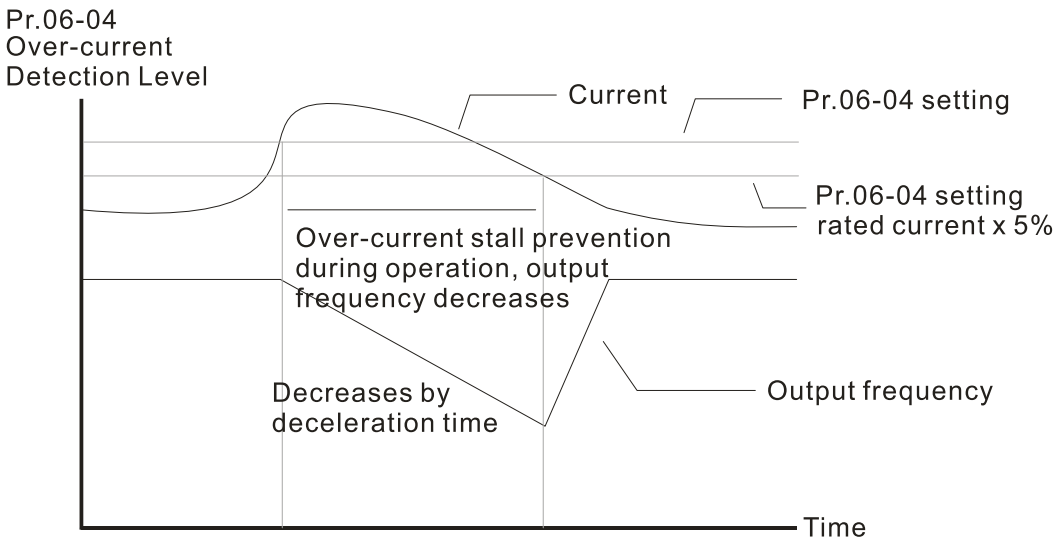

Over-current stall prevention during operation

06-05 Acceleration / Deceleration Time Selection for Stall Prevention at Constant Speed

Default: 0

Settings
0: By current acceleration / deceleration time
1: By the first acceleration / deceleration time
2: By the second acceleration / deceleration time
3: By the third acceleration / deceleration time
4: By the fourth acceleration / deceleration time
5: By auto-acceleration / auto-deceleration

- Sets the acceleration / deceleration time selection when stall prevention occurs at constant speed.

06-06 Over-torque Detection Selection (OT1)

Default: 0

Settings 0: No function
1: Continue operation after over-torque detection during constant speed operation
2: Stop after over-torque detection during constant speed operation
3: Continue operation after over-torque detection during RUN
4: Stop after over-torque detection during RUN

06-09 Over-torque Detection Selection (OT2)

Default: 0

Settings 0: No function
1: Continue operation after over-torque detection during constant speed operation
2: Stop after over-torque detection during constant speed operation
3: Continue operation after over-torque detection during RUN
4: Stop after over-torque detection during RUN

When you set Pr.06-06 and Pr.06-09 to 1 or 3, a warning message displays, but there is no error record.

When you set Pr.06-06 and Pr.06-09 to 2 or 4, an error message displays and there is an error record.

06-07 Over-torque Detection Level (OT1)

Default: 120

Settings 10–250% (100% corresponds to the rated current of the drive)

06-08 Over-torque Detection Level (OT1)

Default: 0.1

Settings 0.0–60.0 sec.

06-10 Over-torque Detection Level (OT2)

Default: 120

Settings 10–250% (100% corresponds to the rated current of the drive)

06-11 Over-torque Detection Time (OT2)

Default: 0.1

Settings 0.0–60.0 sec.

When the output current exceeds the over-torque detection level (Pr.06-07 or Pr.06-10) and exceeds the over-torque detection time (Pr.06-08 or Pr.06-11), the over-torque detection follows the setting of Pr.06-06 and Pr.06-09.

When you set Pr.06-06 or Pr.06-09 to 1 or 3, an ot1 / ot2 warning displays while the drive keeps running after over-torque detection. The warning remains on until the output current is smaller than 5% of the over-torque detection level.

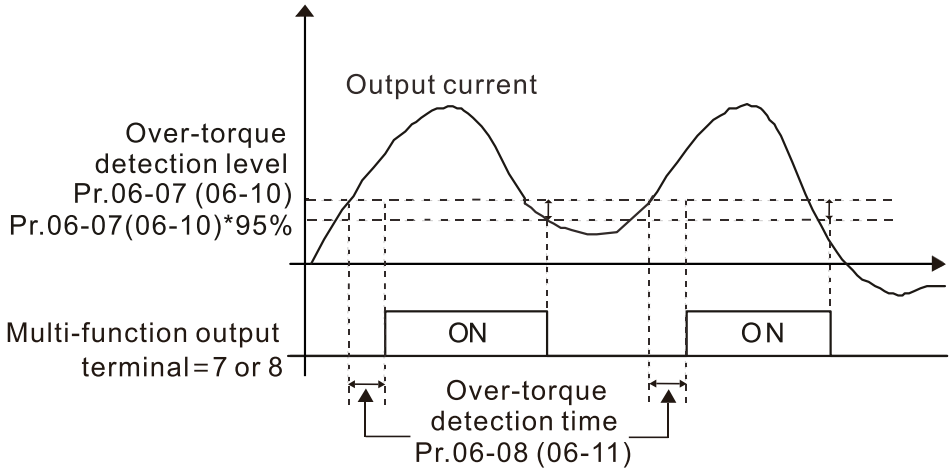

When you set Pr.06-06 or Pr.06-09 to 2 or 4, an ot1 / ot2 warning displays and the drive stops running after over-torque detection. The drive does not run until you manually reset it.

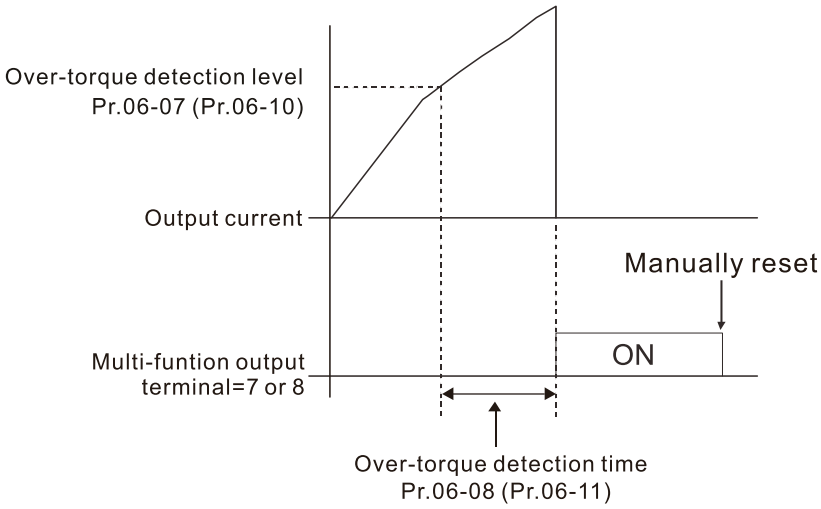

06-12 Current Limit

Default: 200

Settings 0–220% (100% corresponds to the rated current of the drive)

Sets the maximum output current of the drive. Use Pr.11-17–Pr.11-20 to set the drive's output current limit.

06-13 Electronic Thermal Relay Selection (Motor 1)
06-27 Electronic Thermal Relay Selection (Motor 2)

Default: 2

Settings 0: Inverter motor (with external forced cooling)
1: Standard motor (motor with fan on the shaft)
2: Disable

Prevents self-cooled motor from overheating under low speed. Use an electronic thermal relay to limit the drive's output power.

Setting the parameter to 0 is suitable for an inverter motor (motor fan using an independent power supply). For this kind of motor, there is no significant correlation between cooling capacity and motor speed. Therefore, the action of electronic thermal relays remains stable in low speed to ensure the load capability of the motor in low speed.

- Setting the parameter to 1 is suitable for standard motor (motor fan is fixed on the rotor shaft). For this kind of motor, the cooling capacity is lower in low speed; therefore, the action of an electronic thermal relay reduces the action time to ensure the life of motor.
- When the power is cycled frequently, if the power is switched OFF, the electronic thermal relay protection is reset; therefore, even setting the parameter to 0 or 1 may not protect the motor well. If there are several motors connected to one drive, install an electronic thermal relay in each motor.

06-14 Electronic Thermal Relay Action Time 1 (Motor 1)
06-28 Electronic Thermal Relay Action Time 2 (Motor 2)

Default: 60.0

Settings 30.0–600.0 sec.

- Set the parameter to 150% of motor rated current and use with the setting of Pr.06-14 and Pr.06-28 to prevent motor damage due to overheating. When it reaches the setting, the drive displays “EoL1 / EoL2”, and the motor coasts to stop.
- Use this parameter to set the action time of the electronic thermal relay. It works based on the I^2t characteristic curve of electronic thermal relay, the output frequency and current of the drive, and the operation time to prevent the motor from overheating.

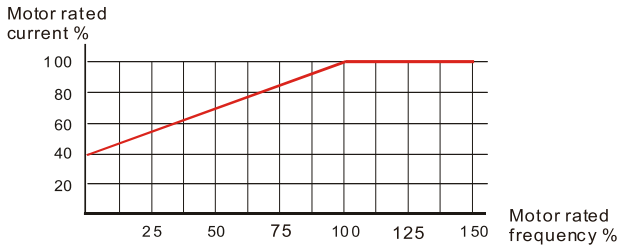

Motor cooling curve with shaft-fixed fan

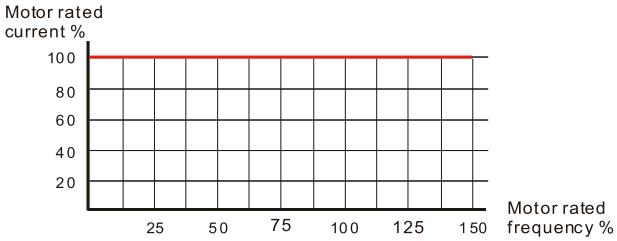

Motor cooling curve with independent fan

- The action of electronic thermal relay depends on the setting for Pr.06-13 and Pr.06-27.
  1. Pr.06-13 or Pr.06-27 is set to 0 (using inverter motor):
     When the output current of motor drive is higher than 150% of the motor rated current (refer to the motor rated current % corresponded to the motor rated frequency in the motor cooling curve with independent fan), motor drive starts to count the time. The electronic thermal relay acts when the accumulated time exceeds Pr.06-14 or Pr.06-28.
  2. Pr.06-13 or Pr.06-27 is set to 1 (using standard motor):
     When the output current of the drive is higher than 150% of the motor rated current (refer to the motor rated current % corresponded to the motor rated frequency in the motor cooling curve with shaft-fixed fan), the drive starts to count the time. The electronic thermal relay acts when the accumulated time exceeds Pr.06-14 or Pr.06-28.
  3. If the motor’s rated current (Pr.05-01) is not set, then set 90% of the drive’s rated current (Pr.00-01) as the default value of this parameter.
- The actual electronic thermal relay action time adjusts according to the drive output current (shown as the motor loading rate %). The action time is short when the current is high, and the action time is long when the current is low. Refer to the following diagram: (The motor cooling curve with shaft-fixed fan and motor cooling curve with independent fan F = 50 Hz are the same one.)

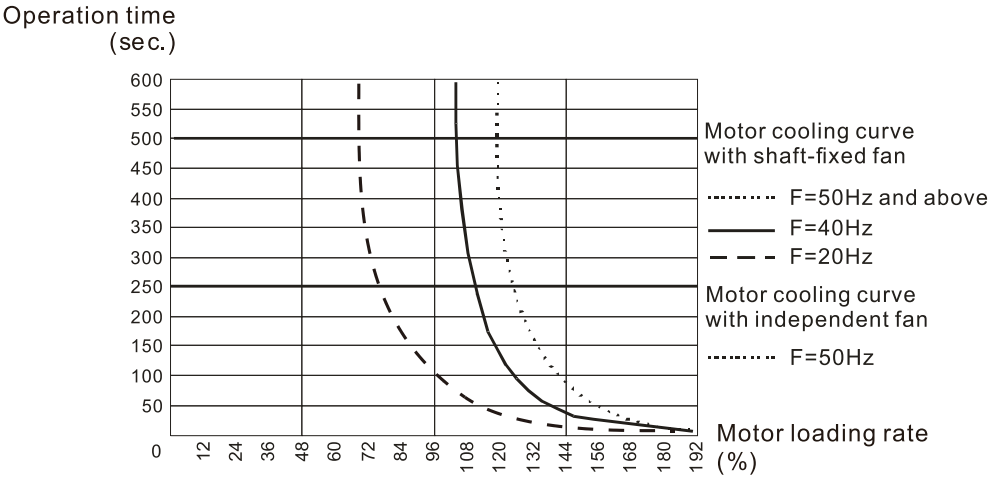

06-15 Temperature Level Overheat (oH) Warning

Default: 105.0

Settings 0.0–110.0ºC

- If Pr.06-15 is set to 110ºC, when the temperature reaches 110ºC, the drive stops with an IGBT over-heat fault.
- For Frame C and above, when IGBT temperature is above Pr.06-15 minus 15ºC, the cooling fan enhances performance to 100%; however, when IGBT temperature is below 35ºC of Pr.06-15 and the temperature of CAP is below 10ºC of capacitor oH warning level (Pr.06-51), the cooling fan resets. The temperature 35ºC is the criterion if Pr.06-15 is set below 35ºC.

06-16 Stall Prevention Limit Level (Weak Magnetic Field Current Stall Prevention Level)

Default: 100

Settings 0–100% (Refer to Pr.06-03)

- Sets the over-current stall prevention level when the motor's operation frequency is larger than Pr.01-01 (base frequency). This parameter only works during acceleration.
- Example: Pr.06-03 = 150%, Pr.06-04 = 100% and Pr.06-16 = 80%, when the operation frequency is larger than Pr.01-01, the lowest over-current stall prevention level during acceleration is:
  Pr.06-03 × Pr.06-16 = 150 × 80% = 120%. (Refer to Pr.06-03 diagram for the protection curve.)
- Pr.06-16 is invalid when the over-current stall prevention activates according to Pr.06-04 at constant speed.

06-17 Fault Record 1
06-18 Fault Record 2
06-19 Fault Record 3
06-20 Fault Record 4
06-21 Fault Record 5
06-22 Fault Record 6

Settings

0: No fault record

1: Over-current during acceleration (ocA)

2: Over-current during deceleration (ocd)
3: Over-current during steady operation (ocn)
4: Ground fault (GFF)
5: IGBT short circuit between upper bridge and lower bridge (occ)
6: Over-current at stop (ocS)
7: Over-voltage during acceleration (ovA)
8: Over-voltage during deceleration (ovd)
9: Over-voltage at constant speed (ovn)
10: Over-voltage at stop (ovS)
11: Low-voltage during acceleration (LvA)
12: Low-voltage during deceleration (Lvd)
13: Low-voltage at constant speed (Lvn)
14: Low-voltage at stop (LvS)
15: Phase loss protection (OrP)
16: IGBT overheating (oH1)
17: Heatsink overheating (oH2)
18: IGBT temperature detection failure (tH1o)
19: Capacitor hardware error (tH2o)
21: Over load (oL)
22: Electronic thermal relay 1 protection (EoL1)
23: Electronic thermal relay 2 protection (EoL2)
24: Motor overheating (oH3) (PTC / PT100)
25: Interrupt error (INTR)
26: Over torque 1 (ot1)
27: Over torque 2 (ot2)
28: Under current (uC)
29: Limit error (LiT)
30: EEPROM write error (cF1)
31: EEPROM read error (cF2)
33: U-phase error (cd1)
34: V-phase error (cd2)
35: W-phase error (cd3)
36: cc (current clamp) hardware error (Hd0)
37: oc (over-current) hardware error (Hd1)
38: ov (over-voltage) hardware error (Hd2)
39: occ hardware error (Hd3)
40: Auto-tuning error (AUE)
41: PID loss ACI (AFE)
42: PG feedback error (PGF1)
43: PG feedback loss (PGF2)
44: PG feedback stall (PGF3)
45: PG slip error (PGF4)

48: ACI loss (ACE)
49: External fault (EF)
50: Emergency stop (EF1)
51: External base block (bb)
52: Enter wrong password three times and locked (Pcod)
54: Illegal command (CE1)
55: Illegal data address (CE2)
56: Illegal data value (CE3)
57: Data is written to read-only address (CE4)
58: Modbus transmission time-out (CE10)
60: Brake transistor error (bF)
61: Y-connection / Δ-connection switch error (ydc)
62: Deceleration energy backup error (dEb)
63: Over slip error (oSL)
64: Electric valve switch error (ryF)
65: Hardware error of PG card (PGF5)
68: Reverse direction of the speed feedback (SdRv)
69: Over speed rotation feedback (SdOr)
70: Large deviation of speed feedback (SdDe)
71: Watchdog (WDTT)
72: STO Loss 1 (STL1)
73: Emergency stop for external safety (S1)
75: External brake error
76: Safe torque off (STO)
77: STO Loss 2 (STL2)
78: STO Loss 3 (STL3)
82: Output phase loss U phase (OPHL)
83: Output phase loss V phase (OPHL)
84: Output phase loss W phase (OPHL)
85: PG ABZ line off (AboF) (PG-02U)
86: PG UVW line off (UvoF) (PG-02U)
87: Overload protection at low frequency (oL3)
89: Rotor position detection error (RoPd)
90: Forced to stop (FStp)
92: Pulse tuning Ld / Lq error (LEr)
93: CPU error 0 (TRAP)
101: CANopen guarding error (CGdE)
102: CANopen heartbeat error (CHbE)
104: CANopen bus off error (CbFE)
105: CANopen index error (CidE)
106: CANopen station address error (CAdE)
107: CANopen memory error (CFrE)

111: InrCOM time-out error (ictE)
112: PM sensorless shaft lock error (SfLK)
142: Auto-tune error 1 (no feedback current error) (AUE1)
143: Auto-tune error 2 (motor phase loss error) (AUE2)
144: Auto-tune error 3 (no-load current I_0 measuring error) (AUE3)
148: Auto-tune error 4 (leakage inductance Lsigma measuring error) (AUE4)
171: Over position error (oPEE)
174: Encoder error (EcEr)
175: Encoder communication error (EcCe)
176: Encoder multi-turn overflows (EcOF)
177: Encoder power off (EcNP)
178: Encoder multi-turn error (EcMc)
179: PG multi-turn read error (PgMr)
180: Encoder single-turn error (EcSc)
181: PG command error (PgCe)
182: Interpolation time error (IPTE)
183: Interpolation command failure (IPCM)
184: No motion control (NoMo)
185: Motor code error (MoTo)
187: Flux linkage observer failure (FobF)
188: Load estimation error (TLAT)
189: Inertia estimation error (JsAT)
190: Bandwidth estimation error (BWAT)
191: Positioning failure during estimation (ATPF)
192: Homing deviation is too large (HmOE)
193: Cleaning multi-turn data failure (CMTE)
195: ASR AT process is too short (ATTv)

- The parameters record when the fault occurs and forces a stop.
- When low-voltage at stop fault (LvS) occurs, the fault is not recorded. When low-voltage during operation faults (LvA, Lvd, Lvn) occur, the faults are recorded.
- When dEb function is valid and enabled, the drive executes dEb and records fault code 62 to Pr.06-17–Pr.06-22 simultaneously.

06-23 Fault Output Option 1
06-24 Fault Output Option 2
06-25 Fault Output Option 3
06-26 Fault Output Option 4

Default: 0

Settings 0–65535 sec. (refer to bit table for fault code)

- Use these parameters with multi-function output terminal (set Pr.06-23–Pr.06-26 to 35–38) for the specific requirement. When the fault occurs, the corresponding terminals are activated. Convert the binary value to decimal value before you enter the value for Pr.06-23–Pr.06-26.

Fault Code	bit0	bit1	bit2	bit3	bit4	bit5	bit6
	current	Volt.	OL	SYS	FBK	EXI	CE
0: No fault record							
1: Over-current during acceleration (ocA)	●						
2: Over-current during deceleration (ocd)	●						
3: Over-current during steady operation (ocn)	●						
4: Ground fault (GFF)	●						
5: IGBT short circuit between upper bridge and lower bridge (occ)	●						
6: Over-current at stop (ocS)	●						
7: Over-voltage during acceleration (ovA)		●					
8: Over-voltage during deceleration (ovd)		●					
9: Over-voltage at constant speed (ovn)		●					
10: Over-voltage at stop (ovS)		●					
11: Low-voltage during acceleration (LvA)		●					
12: Low-voltage during deceleration (Lvd)		●					
13: Low-voltage at constant speed (Lvn)		●					
14: Low-voltage at stop (LvS)		●					
15: Phase loss protection (OrP)		●					
16: IGBT overheating (oH1)			●				
17: Heatsink overheating (oH2)			●				
18: IGBT temperature detection failure (tH1o)			●				
19: Capacitor hardware error (tH2o)			●				
21: Over load (oL)			●				
22: Electronic thermal relay 1 protection (EoL1)			●				
23: Electronic thermal relay 2 protection (EoL2)			●				
24: Motor overheating (oH3) (PTC / PT100)			●				
25: Interrupt error (INTR)				●			
26: Over torque 1 (ot1)			●				
27: Over torque 2 (ot2)			●				
28: Under current (uC)	●						
29: Limit error (LiT)						●	
30: EEPROM write error (cF1)				●			
31: EEPROM read error (cF2)				●			
33: U-phase error (cd1)				●			
34: V-phase error (cd2)				●			
35: W-phase error (cd3)				●			
36: cc (current clamp) hardware error (Hd0)				●			
37: oc (over-current) hardware error (Hd1)				●			
38: ov (over-voltage) hardware error (Hd2)				●			

Fault Code	bit0	bit1	bit2	bit3	bit4	bit5	bit6
	current	Volt.	OL	SYS	FBK	EXI	CE
39: occ hardware error (Hd3)				●			
40: Auto-tuning error (AUE)				●			
41: PID loss ACI (AFE)					●		
42: PG feedback error (PGF1)					●		
43: PG feedback loss (PGF2)					●		
44: PG feedback stall (PGF3)					●		
45: PG slip error (PGF4)					●		
48: ACI loss (ACE)					●		
49: External fault (EF)						●	
50: Emergency stop (EF1)						●	
51: External base block (bb)						●	
52: Enter wrong password three times and locked (Pcod)				●			
53: SW code error (ccod)				●			
54: Illegal command (CE1)							●
55: Illegal data address (CE2)							●
56: Illegal data value (CE3)							●
57: Data is written to read-only address (CE4)							●
58: Modbus transmission time-out (CE10)							●
60: Brake transistor error (bF)						●	
61: Y-connection / Δ-connection switch error (ydc)						●	
62: Deceleration energy backup error (dEb)		●					
63: Over slip error (oSL)					●		
64: Electric valve switch error (ryF)						●	
65: Hardware error of PG card (PGF5)						●	
68: Reverse direction of the speed feedback (SdRv)					●		
69: Over speed rotation feedback (SdOr)					●		
70: Large deviation of speed feedback (SdDe)					●		
71: Watchdog (WDTT)				●			
72: STO loss 1 (STL1)				●			
73: Emergency stop for external safety (S1)				●			
75: External brake error (Brk)						●	
76: Safe torque off (STO)				●			
77: STO Loss 2 (STL2)				●			
78: STO Loss 3 (STL3)				●			
82: Output phase loss U phase (OPHL)	●						
83: Output phase loss V phase (OPHL)	●						
84: Output phase loss W phase (OPHL)	●						

Fault Code	bit0	bit1	bit2	bit3	bit4	bit5	bit6
	current	Volt.	OL	SYS	FBK	EXI	CE
85: PG ABZ line off (AboF) (PG-02U)					●		
86: PG UVW line off (UvoF) (PG-02U)					●		
87: Overload protection at low frequency (oL3)			●				
89: Rotor position detection error (RoPd)					●		
90: Forced to stop (FStp)				●			
92: Pulse tuning Ld / Lq error (LEr)	●						
93: CPU error 0 (TRAP)				●			
101: CANopen guarding error (CGdE)							●
102: CANopen heartbeat error (CHbE)							●
104: CANopen bus off error (CbFE)							●
105: CANopen index error (CidE)							●
106: CANopen station address error (CAdE)							●
107: CANopen memory error (CFrE)							●
111: InrCOM time-out error (ictE)							●
112: PM sensorless shaft lock error (SfLK)					●		
142: Auto-tune error 1 (no feedback current error)	●						
143: Auto-tune error 2 (motor phase loss error) (AUE2)				●			
144: Auto-tune error 3 (no-load current I_0 measuring error) (AUE3)	●						
148: Auto-tune error 4 (leakage inductance Lsigma measuring error) (AUE4)	●						
171: Over position error (oPEE)				●			
174: Encoder error (EcEr)					●		
175: Encoder communication error (EcCe)					●		
176: Encoder multi-turn overflows (EcOF)					●		
177: Encoder power off (EcNP)						●	
178: Encoder multi-turn error (EcMc)					●		
179: PG multi-turn read error (PgMr)					●		
180: Encoder single-turn error (EcSc)					●		
181: PG command error (PgCe)					●		
182: Interpolation time error (IPTE)				●			
183: Interpolation command failure (IPCM)				●			
184: No motion control (NoMo)				●			
185: Motor code error (MoTo)				●			
187: Flux linkage observer failure (FobF)					●		
188: Load estimation error (TLAT)					●		
189: Inertia estimation error (JsAT)					●		

Fault Code	bit0	bit1	bit2	bit3	bit4	bit5	bit6
	current	Volt.	OL	SYS	FBK	EXI	CE
190: Bandwidth estimation error (BWAT)					●		
191: Positioning failure during estimation (ATPF)					●		
192: Homing deviation is too large (HmOE)				●			
193: Cleaning multi-turn data failure (CMTE)				●			
195: ASR AT process is too short (ATTv)					●		

06-29 PTC Detection Selection / PT100 Motion

Default: 0

Settings 0: Warn and continue operation
1: Fault and ramp to stop
2: Fault and coast to stop
3: No warning

Sets the operation mode of a drive after detecting PTC / PT100 / KTY84 / PT1000.

06-30 PTC Level / KTY84 Level

Default: 50.0

Settings 0.0–100.0%

When Pr.06-86 = 0, the setting range is 0.0–100.0, with unit %, and the default is 50.0%.
When Pr.06-86 = 1, the setting range is 0.0–150.0, with unit ºC, and the default is 125.0ºC.
When Pr.06-86 = 2, the setting range is 0.0–150.0, with unit ºC, and the default is 125.0ºC.

Sets AVI / ACI / AUI analog input function Pr.03-00–03-02 to 6 [thermistor (PTC) input value].

The AUI terminal does not support KTY84 / PT1000.

Use this to set the PTC / KTY84 / PT1000 level, the corresponding value for 100% is the analog input maximum value.

When Pr.06-86 is set as KTY84 / PT1000, Pr.06-30 setting range and the unit changes automatically.

06-31 Frequency Command at Malfunction

Default: Read only

Settings 0.00–599.00 Hz

When a malfunction occurs, check the current frequency command. If it happens again, it overwrites the previous record.

06-32 Output Frequency at Malfunction

Default: Read only

Settings 0.00–599.00 Hz

When a malfunction occurs, check the current output frequency. If it happens again, it overwrites the previous record.

06-33 Output Voltage at Malfunction

Default: Read only

Settings 0.0–6553.5 V

🕮 When a malfunction occurs, check the current output voltage. If it happens again, it overwrites the previous record.

06-34 DC bus Voltage at Malfunction

Default: Read only

Settings 0.0–6553.5 V

🕮 When a malfunction occurs, check the current DC bus voltage. If it happens again, it overwrites the previous record.

06-35 Output Current at Malfunction

Default: Read only

Settings 0.0–6553.5 Amp

🕮 When a malfunction occurs, check the current output current. If it happens again, it overwrites the previous record.

06-36 IGBT Temperature at Malfunction

Default: Read only

Settings -3276.7–3276.7ºC

🕮 When a malfunction occurs, check the current IGBT temperature. If it happens again, it overwrites the previous record.

06-37 Capacitance Temperature at Malfunction

Default: Read only

Settings -3276.7–3276.7ºC

🕮 When a malfunction occurs, check the current capacitance temperature. If it happens again, it overwrites the previous record.

06-38 Motor Speed in rpm at Malfunction

Default: Read only

Settings -32767–32767 rpm

🕮 When a malfunction occurs, check the current motor speed in rpm. If it happens again, it overwrites the previous record.

06-39 Torque Command at Malfunction

Default: Read only

Settings -32767–32767%

🕮 When a malfunction occurs, check the current torque command. If it happens again, it overwrites the previous record.

06-40 Status of the Multi-function Input Terminal at Malfunction

Default: Read only

Settings 0000h–FFFFh

06-41 Status of the Multi-function Output Terminal at Malfunction

Default: Read only

Settings 0000h–FFFFh

📖 When a malfunction occurs, check the current status of multi-function input / output terminals. If it happens again, it overwrites the previous record.

06-42 Drive Status at Malfunction

Default: Read only

Settings 0000h–FFFFh

📖 When a malfunction occurs, check the current drive status (communication address 2101H). If it happens again, it overwrites the previous record.

06-44 STO Latch Selection

Default: 0

Settings 0: STO Latch
1: STO No latch

📖 Pr.06-44 = 0: STO Alarm Latch. After you clear the cause of the STO Alarm, use a Reset command to clear the STO Alarm.

📖 Pr.06-44 = 1: STO Alarm no Latch. After you clear the cause of the STO Alarm, the STO Alarm clears automatically.

📖 All of STL1–STL3 errors are “Alarm Latch” mode (in STL1–STL3 mode, the Pr.06-44 function is not available).

06-45 Output Phase Loss Detection Action (OPHL)

Default: 3

Settings 0: Warn and continue operation
1: Fault and ramp to stop
2: Fault and coast to stop
3: No warning

📖 The OPHL protection is enabled when Pr.06-45 is not set to 3.

06-46 Detection Time of Output Phase Loss

Default: 3.000

Settings 0.000–65.535 sec.

06-47 Current Detection Level for Output Phase Loss

Default: 1.00

Settings 0.00–100.00%

06-48 DC Brake Time of Output Phase Loss

Default: 0.000

Settings 0.000–65.535 sec.

📖 There are two situations for the output phase loss detection: “detect when the drive is in operation” and “detect before operation”. Setting Pr.06-48 to 0 disables the OPHL detection function before operation.

The status of output phase loss detection is as following:

- Status 1: The drive is in operation
  When any phase is less than the Pr.06-47 setting, and exceeds the Pr.06-46 setting time, the drive executes according to the Pr.06-45 setting.

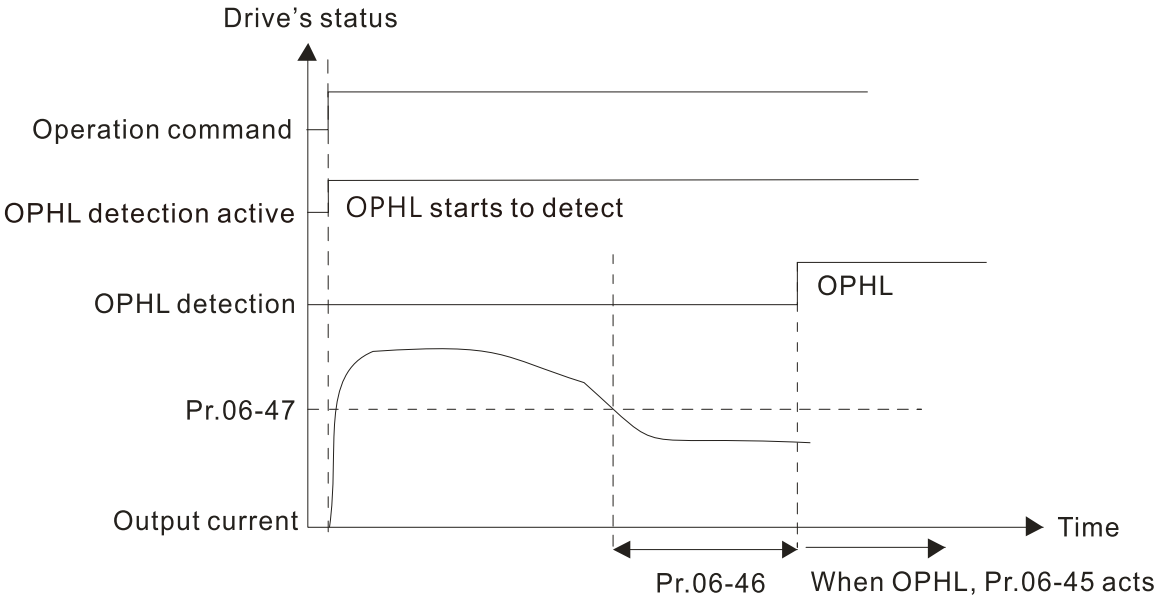

- Status 2: The drive is in STOP; Pr.06-48 = 0 ; Pr.07-02 ≠ 0
  After the drive starts, the DC brake operates according to Pr.07-01 and Pr.07-02. During this period, OPHL detection is not active. After the DC brake action is completed, the drive starts to run, and enables the OPHL protection as mentioned above for status 1.

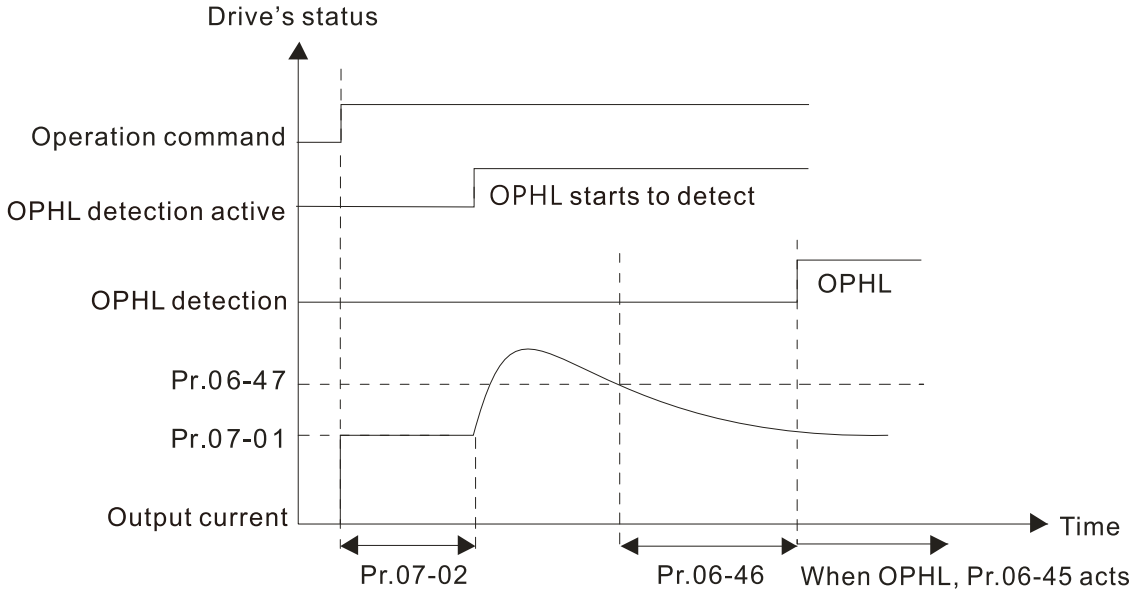

- Status 3: The drive is in STOP; Pr.06-48 ≠ 0; Pr.07-02 ≠ 0
  When the drive starts, it executes Pr.06-48 first, and then executes Pr.07-02 (DC brake). The DC brake current level in this state includes two parts: one is 20 times the Pr.06-47 setting value in Pr.06-48 setting time; the other is the Pr.07-02 setting value in Pr.07-01 setting time. The total DC brake time T = Pr.06-48 + Pr.07-02.

  Status 3-1: Pr.06-48 ≠ 0, Pr.07-02 ≠ 0 (No OPHL detected before operation)

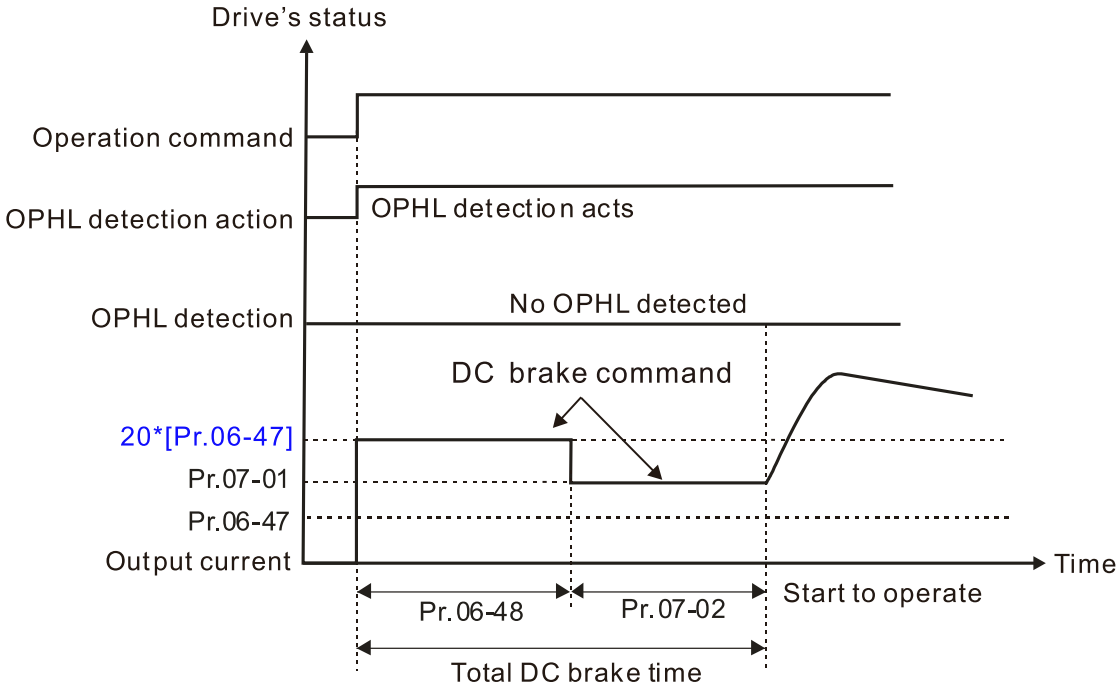

  Status 3-2: Pr.06-48 ≠ 0, Pr.07-20 ≠ 0 (OPHL detected before operation)
  In this period, if an OPHL occurs within the time for Pr.06-48, the drive executes the Pr.06-45 setting after the drive starts counting for half the time of Pr.06-48.

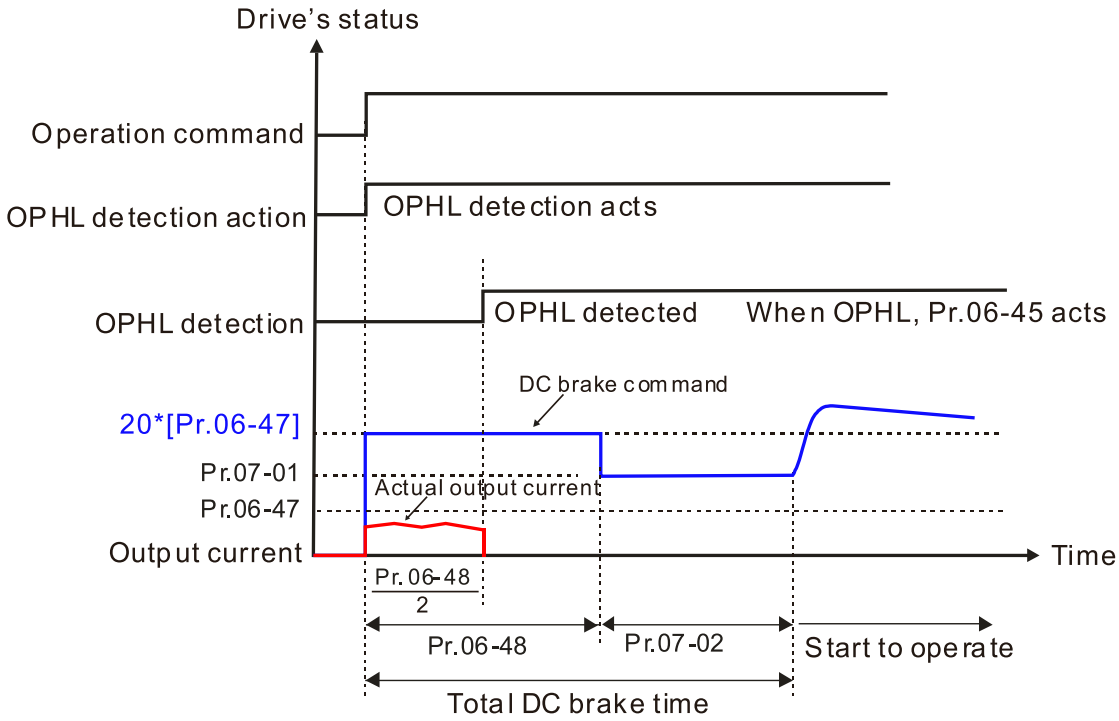

- Status 4: The drive is in STOP; Pr.06-48 ≠ 0; Pr.07-02 = 0
  When the drive starts, it executes Pr.06-48 as the DC brake. The DC brake current level is 20 times the Pr.06-47 setting value.

  Status 4-1: Pr.06-48 ≠ 0, Pr.07-02 = 0 (No OPHL detected before operation)

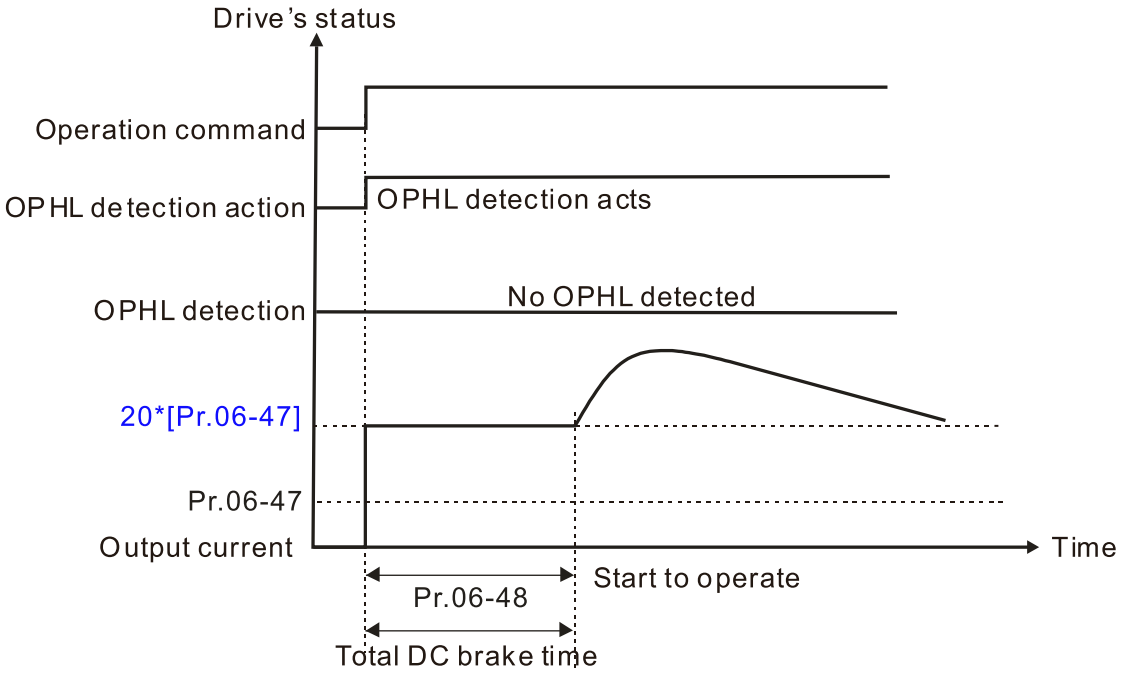

  Status 4-2: Pr.06-48 ≠ 0, Pr.07-02 = 0 (OPHL detected before operation)
  In this period, if an OPHL occurs within the time for Pr.06-48, the drive executes the Pr.06-45 setting after the drive starts counting for half the time of Pr.06-48.

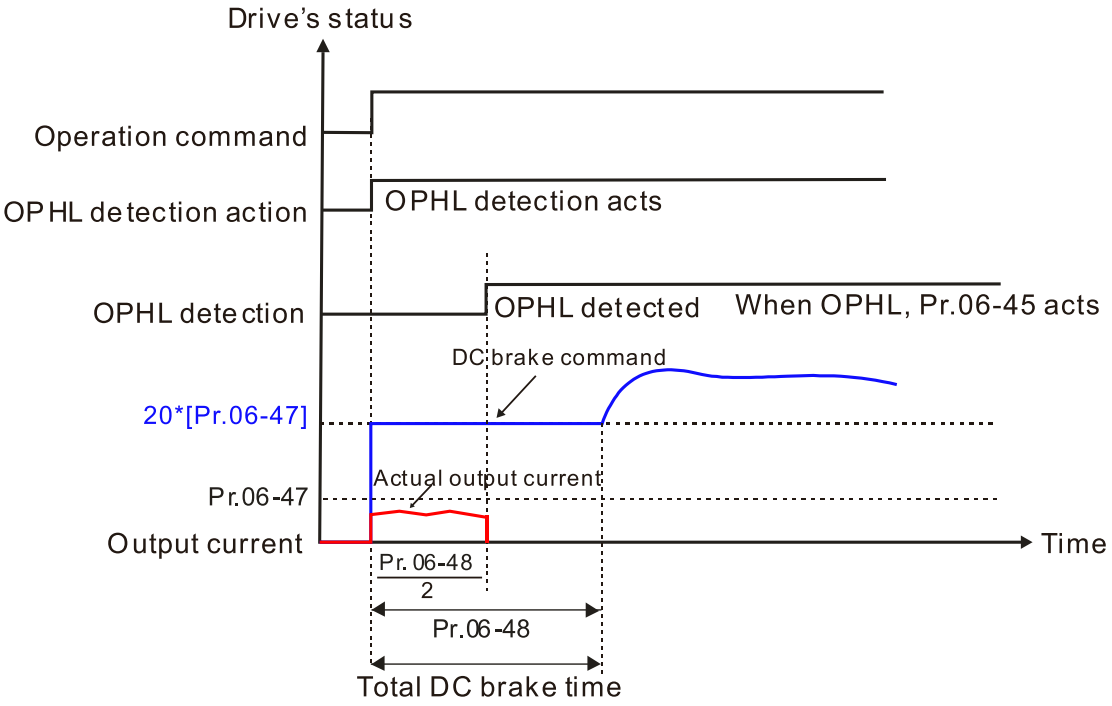

06-49 LvX Auto-reset

Default: 0

Settings 0: Disable
1: Enable

06-50 Time for Input Phase Loss Detection

Default: 0.20

Settings 0.00–600.00 sec.

06-51 Capacitor oH Warning Level

Default:
Depending on the model power

Settings 0.0–110.0 degree

- Sets the over-heat warning level of the drive's internal DC bus capacitor.
- When the setting is less than 10.0 degree, the drive uses its internal capacitor oH warning level.

06-52 Ripple of Input Phase Loss

Default: 30.0 / 60.0

Settings 230V models: 0.0–160.0 V_{DC}
460V models: 0.0–320.0 V_{DC}

06-53 Detected Input Phase Loss (OrP) Action

Default: 0

Settings 0: Fault and ramp to stop
1: Fault and coast to stop

- When the drive detects the DC bus ripple exceeds the setting for Pr.06-52 and lasts for the time of Pr.06-50 plus 30 seconds, the drive executes the input phase loss protection according to Pr.06-53.
- During the time of Pr.06-50 plus 30 seconds, if the DC bus ripple drops lower than the setting for Pr.06-52, the Orp protection recalculates.

06-56 PT100 Voltage Level 1

Default: 5.000

Settings 0.000–10.000 V

06-57 PT100 Voltage Level 2

Default: 7.000

Settings 0.000–10.000 V

- Condition settings: PT100 voltage level Pr.06-57 > Pr.06-56.

06-58 PT100 Level 1 Frequency Protection

Default: 0.00

Settings 0.00–599.00 Hz

06-59 PT100 Activation Level 1 Protection Frequency Delay Time

Default: 60

Settings 0–6000 sec.

PT100 operation instructions

(1) Use voltage type analog input (AVI, AUI, and ACI voltage 0–10 V) and select PT100 mode.

(2) Select one of the voltage type analog inputs below:

(a) AVI (Pr.03-00 = 11)

(b) AUI (Pr.03-02 = 11)

(c) ACI (Pr.03-01 = 11 and Pr.03-29 = 1).

(3) When selecting Pr.03-01 = 11 and Pr.03-29 = 1, you must switch SW4 to 0–10 V for the external I/O board.

(4) The AFM2 outputs constant voltage or current, then Pr.03-23 = 23. You must switch AFM2 SW2 to 0–20 mA for the external I/O board and set AFM2 output level to 45% (Pr.03-33 = 45%) of 20 mA = 9 mA.

(5) Use Pr.03-33 to adjust the constant voltage or constant current of the AFM2 output; the setting range is 0–100.00%.

(6) There are two types of action levels for PT100. The diagram below shows the PT100 protecting action.

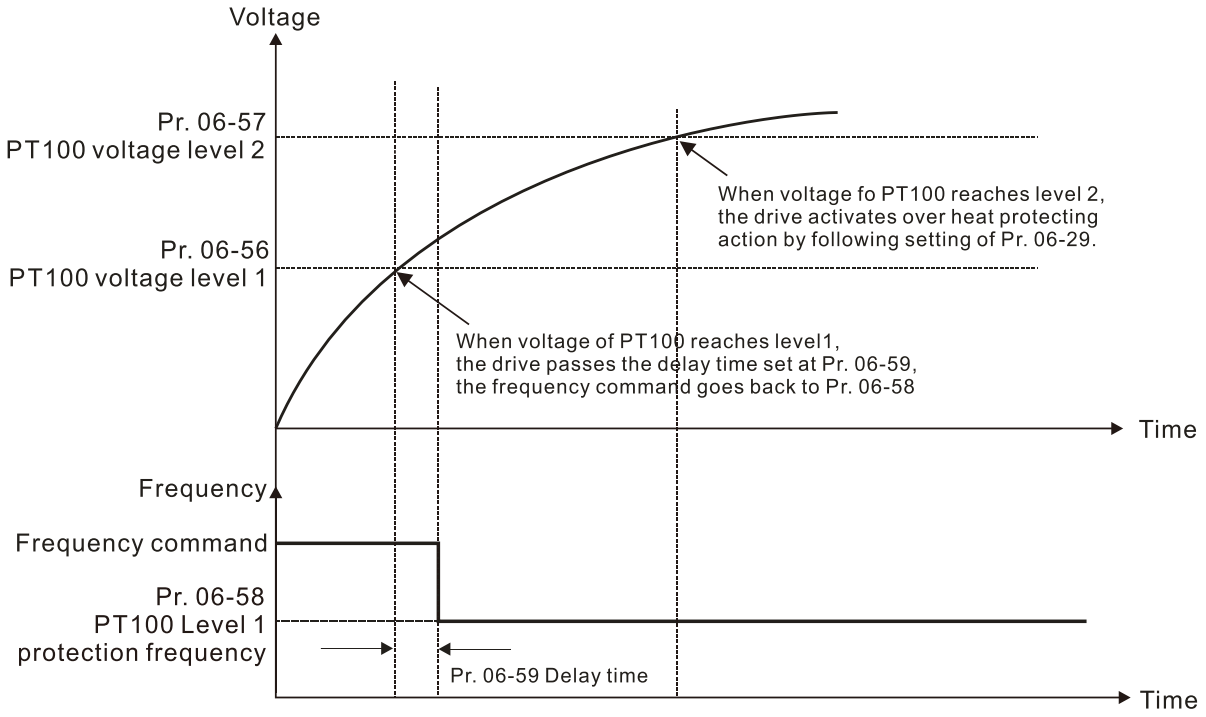

(7) PT100 wiring diagram:

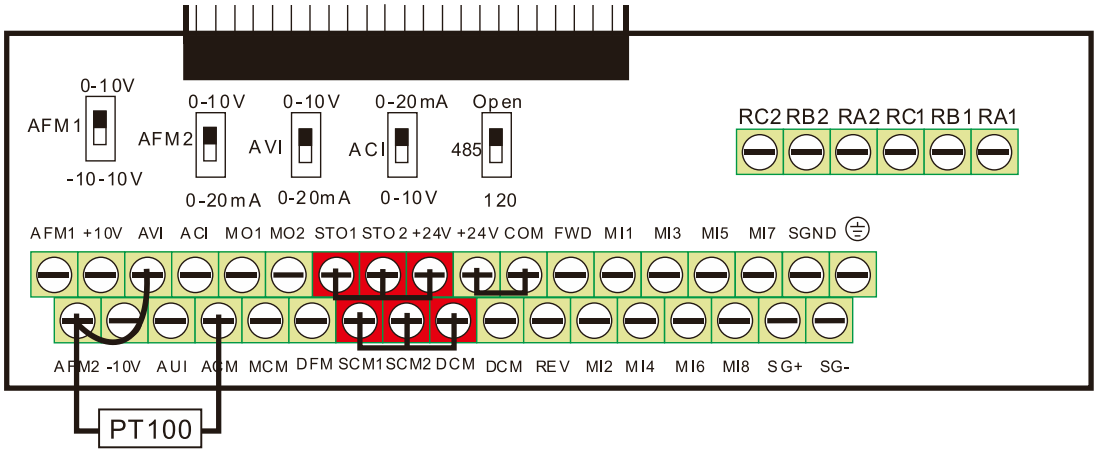

Figure 1

When Pr.06-58 = 0.00 Hz, PT100 function is disabled.

Case:

When using PT100, if the motor temperature is higher than 135ºC (275°F), the drive starts to count the delay time for auto-deceleration (Pr.06-59). The drive decreases the motor frequency to the setting for Pr.06-58 when it reaches the delay time count value. The drive operates at the frequency set for Pr.06-58 until the motor temperature is lower than 135°C (275°F). If the motor temperature is higher than 150°C (302°F), the drive automatically decelerates to STOP and displays the warning “oH3”.

Set up process:

1. Switch AFM2 to 0–20 mA on the I/O control terminal block. (Refer to Figure 1, PT100 wiring diagram)
2. Wiring (Refer to Figure 1, PT100 wiring diagram):
   Connect external terminal AFM2 to “+”
   Connect external terminal ACM to “-“
   Connect external terminals AFM2 and AVI to “short circuit ”
3. Set Pr.03-00 = 11, Pr.03-23 = 23 or Pr.03-33 = 45% (9 mA)
4. Refer to the RTD temperature and resistance comparison table
   Temperature = 135ºC, resistance = 151.71 Ω; input current: 9 mA, voltage: about 1.37 V_{DC}
   Temperature = 150ºC, resistance = 157.33 Ω; input current: 9 mA, voltage: about 1.42 V_{DC}
5. When the RTD temperature > 135ºC, the drive decelerates to the specified operation frequency automatically. Then, Pr.06-56 = 1.37 V and Pr.06-58 = 10 Hz. (When Pr.06-58 = 0, it disables the specified operation frequency.)
6. When the RTD temperature > 150ºC, the drive outputs a fault, decelerates to STOP, and displays the warning “oH3”. Then, Pr.06-57 = 1.42 V and Pr.06-29 = 1 (Fault and ramp to stop).

06-60 Software Detection GFF Current Level

Default: 60.0

Settings 0.0–6553.5%

06-61 Software Detection GFF Filter Time

Default: 0.10

Settings 0.00–655.35 sec.

When the drive detects the unbalanced three-phase output current is higher than the setting for Pr.06-60, GFF protection activates. The drive then stops output.

06-62 dEb Reset Bias Level

Default: 20.0 / 40.0

Settings 230V models: 0.0–100.0 V_{DC}
460V models: 0.0–200.0 V_{DC}

Prevents action vibration caused by dEb action level = reset level. dEb active level + Pr.06-62 = dEb reset bias level.

06-63	Operation Time of Fault Record 1 (Days)
06-65	Operation Time of Fault Record 2 (Days)
06-67	Operation Time of Fault Record 3 (Days)
06-69	Operation Time of Fault Record 4 (Days)

Default: Read only

Settings 0–65535 days

06-64	Operation Time of Fault Record 1 (Minutes)
06-68	Operation Time of Fault Record 2 (Minutes)
06-70	Operation Time of Fault Record 3 (Minutes)
06-72	Operation Time of Fault Record 4 (Minutes)

Default: Read only

Settings 0–1439 min.

If there is any malfunctions when the drive operates, Pr.06-17–Pr.06-22 record the malfunctions and Pr.06-63–Pr.06-70 record the operation time for four sequential malfunctions. Check if there is any problem with the drive according to the interval of the recorded fault.

Example:

The first error: ocA occurs after motor drive operates for 1000 minutes.

The second error: ocd occurs after another 1000 minutes.

The third error: ocn occurs after another 1000 minutes.

The fourth error: ocA occurs after another 1000 minutes.

The fifth error: ocd occurs after another 1000 minutes.

The sixth error: ocn occurs after another 1000 minutes.

Then Pr.06-17–06-22 and Pr.06-63–06-70 are recorded as follows:

	1st fault	2nd fault	3rd fault	4th fault	5th fault	6th fault
Pr.06-17	ocA	ocd	ocn	ocA	ocd	ocn
Pr.06-18	0	ocA	ocd	ocn	ocA	ocd
Pr.06-19	0	0	ocA	ocd	ocn	ocA
Pr.06-20	0	0	0	ocA	ocd	ocn
Pr.06-21	0	0	0	0	ocA	ocd
Pr.06-22	0	0	0	0	0	ocA
Pr.06-63	0	1	2	2	3	4
Pr.06-64	1000	560	120	1120	680	240
Pr.06-65	0	0	1	2	2	3
Pr.06-66	0	1000	560	120	1120	680
Pr.06-67	0	0	0	1	2	2
Pr.06-68	0	0	1000	560	120	1120
Pr.06-69	0	0	0	0	1	2
Pr.06-70	0	0	0	1000	560	120

NOTE: By examining the time record, you can see that that the last fault (Pr.06-17) happened after the drive ran for 4 days and 240 minutes.

06-71 Low Current Setting Level

Default: 0.0

Settings 0.0–100.0%

06-72 Low Current Detection Time

Default: 0.00

Settings 0.00–360.00 sec.

06-73 Low Current Action

Default: 0

Settings 0: No function
1: Fault and coast to stop
2: Fault and ramp to stop by the second deceleration time
3: Warn and continue operation

- The drive operates according to the setting for Pr.06-73 when the output current is lower than the setting for Pr.06-71 and when the time of the low current exceeds the detection time for Pr.06-72. Use this parameter with the multi-function output terminal = 44 (low current output).
- The low current detection function does not execute when the drive is in sleep or standby status.
- Sets Pr.06-71 low current level according to the drive's rated current, the equation is Pr.00-01 (drive's rated current) × Pr.06-71 (low current setting level) % = low current detection level (A). The drive changes the setting for Pr.00-01 (rated current) according to the setting for Pr.00-16 (load selection).

06-86 PTC Type

Default: 0

Settings 0: PTC
1: KTY84-130
2: PT1000

- When using KTY84-130 or PT1000, a divider resistance (2 kΩ, power > 1/4W, ±0.1%) is needed.
- Wiring diagram is as below:

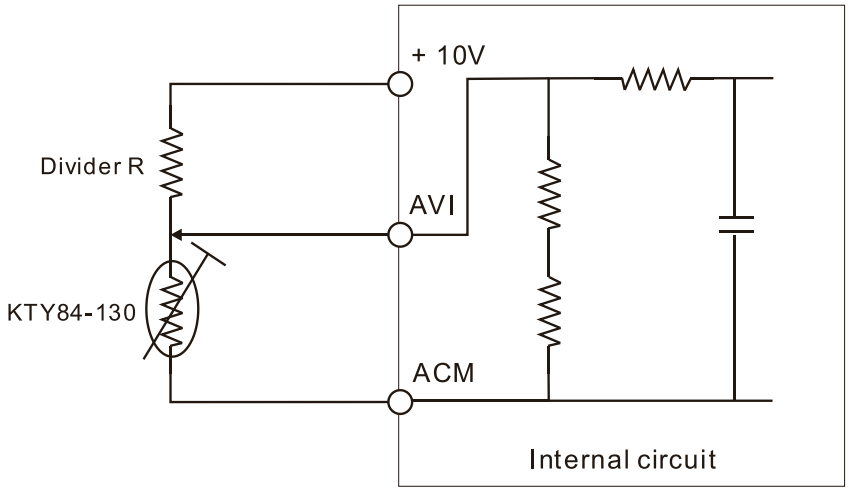

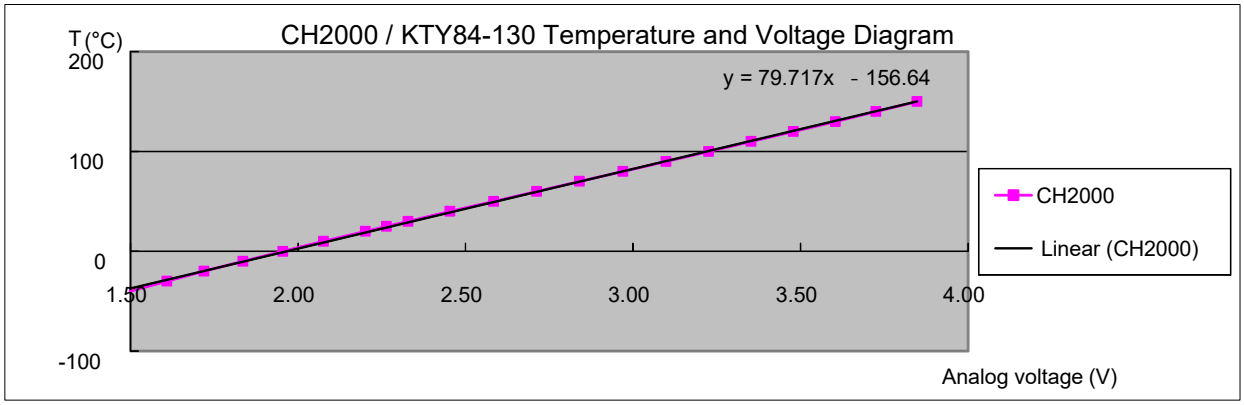

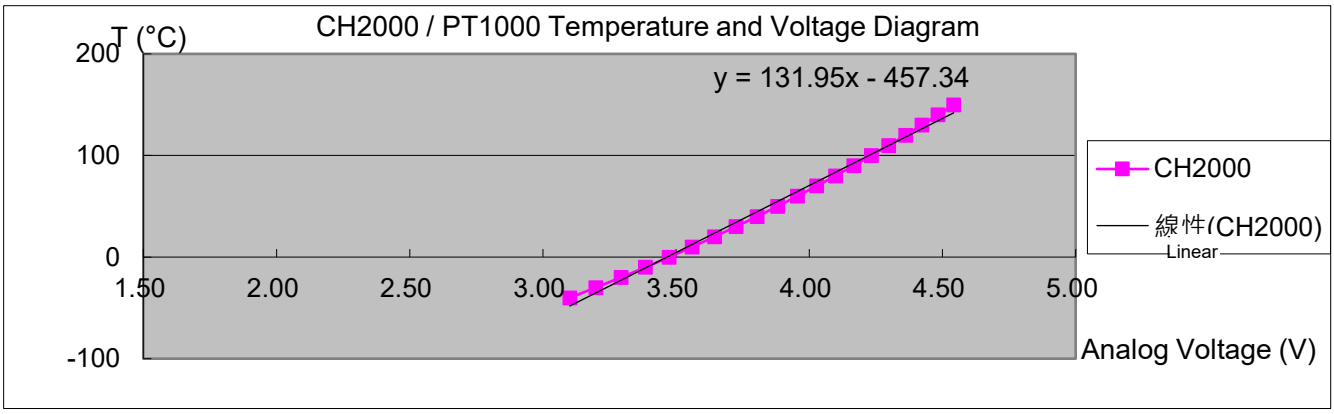

- When the temperature exceeds the setting level, an oH3 error occurs to the drive. Reset conditions: when the temperature is below [the trigger level (Pr.06-30) – 5ºC], the oH3 error is cleared.
- When the KTY / PT1000 is not connected, or the KTY / PT1000 is burned, the calculated temperature is beyond -40–150ºC, the temperature is displayed as its lower limit (-40ºC) or upper limit (150ºC) without additional error information. At this time, the drive still trips up the oH3 error, check if the installation is correct.
- When the temperature detection warning occurs to the KTY-84 / PT1000, select the action according to Pr.06-29.
- When using KTY-84 / PT1000, set the analog input selection Pr.03-00 or Pr.03-01 = 6 (Thermistor input value). You can only choose either AVI or ACI at the same time. The AVI is prior to ACI.
- When using KTY84-130 / PT1000, set the oH3 default level through Pr.06-30 and set the oH3 action selection according to Pr.06-29.
- Set Pr.00-04 = 49 (Motor temperature) to observe the motor temperature.

06-88 Software OC Protection Level (A)

Default: 0.0

Settings 0.0–6553.5 A

- The software OC protection function is enabled when Pr.06-88 ≠ 0.0. Set Pr.06-88 = 0 to disable the software OC protection function.
- The software OC protection level cannot be set lower than PM full-load current (Pr.05-34). If the setting is lower than Pr.05-34, the set current of Pr.05-34 will be used as the protection level.

07 Special Parameters

The following are abbreviations for different types of motors:

- IM: Induction motor
- PM: Permanent magnet synchronous AC motor
- IPM: Interior permanent magnet synchronous AC motor
- SPM: Surface permanent magnet synchronous AC motor
- SynRM: Synchronous reluctance motor

You can set this parameter during operation.

07-00 Software Brake Chopper Action Level

Default: 370.0 / 740.0

Settings 230V models: 350.0–450.0 V_{DC}
460V models: 700.0–900.0 V_{DC}

Sets the DC bus voltage at which the brake chopper is activated. Choose a suitable brake resistor to achieve the best deceleration. Refer to Chapter 7 Optional Accessories for information about brake resistors.

This parameter is only valid for the models below 30 kW of 460 models and 22 kW of 230 models.

07-01 DC Brake Current Level

Default: 0

Settings 0–100%

100% corresponds to the rated current of the drive (Pr.00-01).

Sets the level of the DC brake current output to the motor at start-up and stop. It is recommended that you start with a low DC brake current level and then increase until you reach the proper holding torque. However, the DC brake current cannot exceed the motor's rated current to prevent the motor from burnout. DO NOT use the DC brake for mechanical retention, otherwise injury or accident may occur.

The PM has the magnetic field itself, using the DC brake may possibly cause the motor run in a reverse direction, therefore, it is not recommended to use DC brake for PM.

07-02 DC Brake Time at Start-up

Default: 0.0

Settings 0.0–60.0 sec.

The motor may continue rotating after the drive stops output due to external forces or the inertia of the motor itself. If you use the drive with the motor rotating, it may cause motor damage or trigger drive protection due to over-current. This parameter outputs DC current, generating torque to force the motor stop to get a stable start before motor operation. This parameter determines the duration of the DC brake current output to the motor when the drive starts up. Setting this parameter to 0.0 disables the DC brake at start-up.

The PM has the magnetic field itself, using the DC brake may possibly cause the motor run in a reverse direction, therefore, it is not recommended to use DC brake for PM. Use Pr.10-49 zero voltage command to force the motor decelerate or to stop.

07-03 DC Brake Time at STOP

Default: 0.0

Settings 0.0–60.0 sec.

- The motor may continue rotating after the drive stops output due to external forces or the inertia of the motor itself. This parameter outputs DC current, generating torque to force the drive stop after the drive stops output to make sure that the motor stops.
- This parameter determines the duration of the DC brake current output to the motor when braking. To enable the DC brake at STOP, you must set Pr.00-22 (Stop Method) to 0 (ramp to stop). Set this parameter to 0.0 to disable the DC brake at stop.
- Related parameters:
  - Pr.00-22 Stop Method
  - Pr.07-04 DC Brake Frequency at STOP.

07-04 DC Brake Frequency at STOP

Default: 0.00

Settings 0.00–599.00 Hz

- Determines the start frequency of the DC brake before the drive ramps to stop. When this setting is less than Pr.01-09 (Start-up Frequency), the start frequency for the DC brake begins at the minimum frequency.

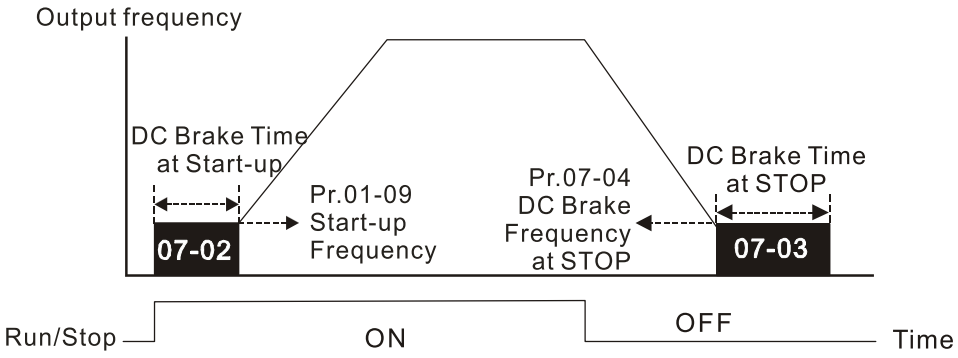

DC Brake Output Timing Diagram

- Use the DC brake before running the motor when the load is movable at stop, such as with fans and pumps. The motor is in free running status and in unknown rotation direction before the drive starts up. Execute the DC brake before you start the motor.
- Use the DC Brake at STOP when you need to brake the motor quickly or to control the positioning, such as with cranes or cutting machines.

07-05 Voltage Increasing Gain

Default: 100

Settings 1–200%

- When using speed tracking, adjust Pr.07-05 to slow down the increasing voltage gain if there are errors such as oL or oc; however, the speed tracking time will be longer.

07-06 Restart after Momentary Power Loss

Default: 0

Settings 0: Stop operation
1: Speed tracking by speed before the power loss
2: Speed tracking by minimum output frequency

- Determines the operation mode when the drive restarts from a momentary power loss.
- The power system connected to the drive may power off momentarily due to many reasons. This function allows the drive to keep outputting voltages after the drive is repowered and does not cause the drive to stop.
- Setting 1: Frequency tracking begins before momentary power loss and accelerates to the master Frequency command after the drive output frequency and motor rotator speed are synchronous. Use this setting when there is a lot of inertia with little resistance on the motor load. For example, in equipment with a large inertia flywheel, there is NO need to wait until the flywheel stops completely after a restart to execute the operation command; therefore, it saves time.
- Setting 2: Frequency tracking starts from the minimum output frequency and accelerates to the master Frequency command after the drive output frequency and motor rotator speed are synchronous. Use this setting when there is little inertia and large resistance.
- In PG control mode, the AC motor drive executes the speed tracking function automatically according to the PG speed when this setting is NOT set to 0.
- This function is only valid when the RUN command is enabled.

07-07 Allowed Power Loss Duration

Default: 2.0

Settings 0.0–20.0 sec.

- Determines the maximum time of allowable power loss. If the duration of a power loss exceeds this parameter setting, the AC motor drive stops output after the power recovers.
- Pr.07-06 is valid when the maximum allowable power loss time is ≤ 20 seconds and the AC motor drive displays “Lv”. If the AC motor drive is powered off due to overload, even if the maximum allowable power loss time is ≤ 20 seconds, Pr.07-06 is invalid after the power recovers.

07-08 Base Block Time

Default:
Depending on the model power

Settings 0.0–5.0 sec.

- When momentary power loss is detected, the AC motor drive blocks its output and then waits for a specified period of time (determined by Pr.07-08, called Base Block Time) before resuming operation. Set this parameter to the time that allows the residual voltage at the output side to decrease to 0 V before activating the drive again.
- This parameter is not only for the B.B. time, but also is the re-start delay time after free run.
- The RUN command during a free run operation is memorized and runs or stops with the last frequency command after the delay time.

- This delay time is only applicable in “Re-start after coast to stop” status, and does not limit ramp to stop. The coast to stop can be caused by various control command source, or by errors.
- Following table is the recommended setting for re-start delay time of each model power. You must set Pr.07-08 according to this table (the default of each model power is based on this table as well).

kW	0.75	1.5	2.2	3.7	5.5	7.5	11.0	15.0	18.5
HP	1	2	3	5	7.5	10	15	20	25
Delay time (sec.)	0.3	0.4	0.5	0.6	0.7	0.8	0.9	1.0	1.1

kW	22.0	30.0	37.0	45.0	55.0	75.0	90.0	110.0	132.0
HP	30	40	50	60	75	100	125	150	175
Delay time (sec.)	1.2	1.3	1.4	1.5	1.6	1.7	1.8	1.9	2.0

kW	160.0	185.0	220.0	280.0	315.0	355.0	400.0
HP	215	250	300	375	425	475	536
Delay time (sec.)	2.1	2.2	2.3	2.4	2.5	2.6	2.7

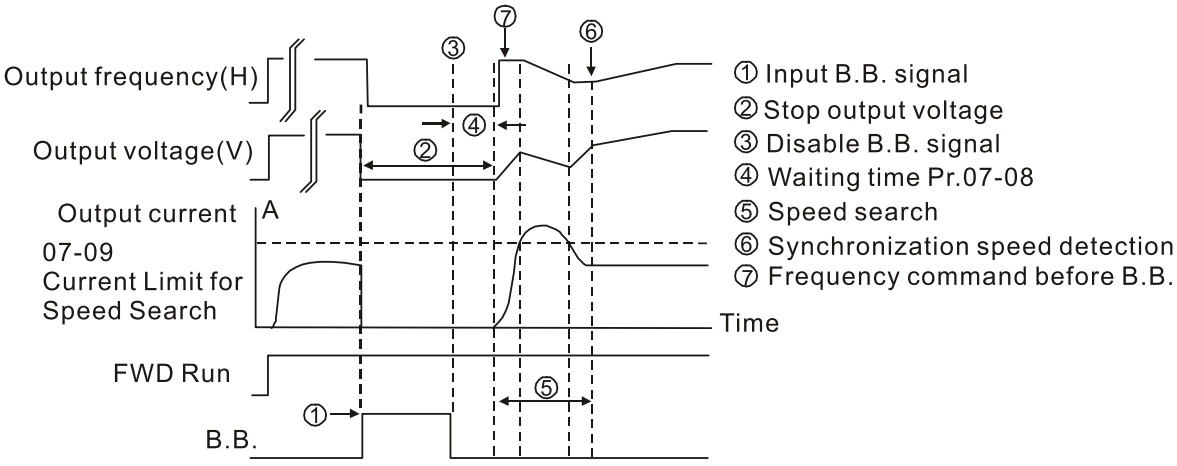

B.B. Search with last output frequency downward timing chart

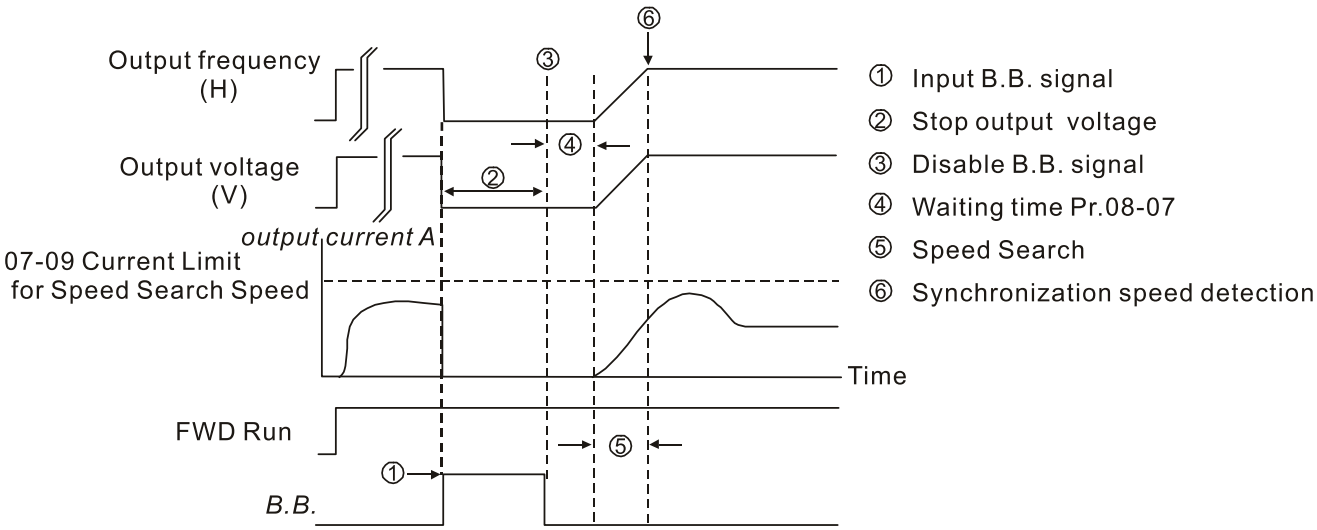

B.B. Search with minimum output frequency upward timing chart

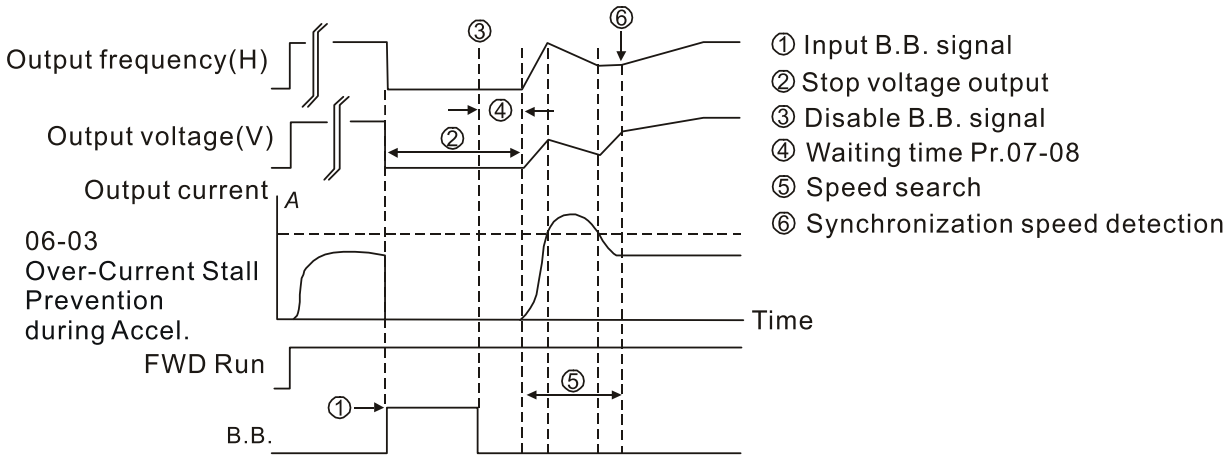

B.B. Search with minimum output frequency upward timing chart

07-09 Current Limit of Speed Tracking

Default: 100

Settings 20–200%

- The AC motor drive executes speed tracking only when the output current is greater than the value set in Pr.07-09.
- The maximum current for speed tracking affects the synchronous time. The larger the parameter setting is, the faster the synchronization occurs. However, if the parameter setting is too large, the overload protection function may be activated.

07-10 Restart after Fault Action

Default: 0

Settings 0: Stop operation
1: Speed tracking by current speed
2: Speed tracking by minimum output frequency

- In PG control mode, the AC motor drive executes the speed tracking function automatically according to the PG speed when this setting is NOT set to 0.
- Faults include bb, oc, ov and occ. To restart after oc, ov and occ, you can NOT set Pr.07-11 to 0.

07-11 Number of Times of Restart after Fault

Default: 0

Settings 0–10

- After fault (oc, ov and occ) occurs, the AC motor drive can reset and restart automatically up to 10 times. If Pr.07-11 is set to 0, the drive resets or restarts automatically after faults occur. The drive starts according to the Pr.07-10 setting after restarting after fault.
- If the number of faults exceeds the Pr.07-11 setting, the drive does not reset and restart until you press “RESET” manually and execute the operation command again.

07-12 Speed Tracking during Start-up

Default: 0

Settings
0: Disable
1: Speed tracking by the maximum output frequency
2: Speed tracking by the frequency command
3: Speed tracking by the minimum output frequency
4: Speed tracking by the motor vector flux

- When using SynRM, only Pr.07-12 = 3 (speed tracking by the minimum output frequency) is enabled.
- Speed tracking is suitable for punch, fans and other large inertia loads. For example, a mechanical punch usually has a large inertia flywheel, and the general stop method is coast to stop. If it needs to be restarted again, the flywheel may take 2–5 minutes or longer to stop. This parameter setting allows you to start the flywheel operating again without waiting until the flywheel stops completely. If you can use the speed feedback function (PG + Encoder), this speed tracking function will be faster and more accurate. Set Pr.07-09 as the target of the output current (the maximum current of speed tracking).
- In PG control mode, the AC motor drive executes the speed tracking function automatically according to the PG speed when this setting is NOT set to 0.
- When using PM, Pr.07-12 ≠ 0, the speed tracking function is enabled. When Pr.07-12 = 1, 2 or 3, the output frequency converts to the actual rotor speed from zero-speed.
- Pr.07-12 = 4 only supports IMVF and IMSVC control modes. For a better tracking result, it is recommended to complete the IM parameter auto-tuning (static, rolling or advanced rolling auto-tuning) before enabling this function.
- Pr.07-12 = 4 (Speed tracking by the motor vector flux) uses the current motor auto-tuning parameter for the motor's vector magnetic field speed tracking. Compared to the speed tracking function of Pr.07-12 = 1–3, it tracks the motor's rotor speed more smoothly, also avoids rapid increasing / decreasing the rotor speed and generating high current.
- Pr.07-12 = 4 takes Pr.10-28 (FOC gain for excitation current rise time, default = 100%Tr, minimum value = 33%Tr) as the speed tracking time. You can adjust the speed tracking current through Pr.05-05 (No-load Current).

07-13 dEb Function Selection

Default: 0

Settings
0: Disable
1: dEb with auto-acceleration / auto-deceleration, the drive does not output the frequency after the power is restored.
2: dEb with auto acceleration / auto-deceleration, the drive outputs the frequency after the power is restored.
3: dEb low-voltage control, then the drive's voltage increase to 350 V_{DC} / 700 V_{DC} and ramps to stop after low frequency
4: dEb high-voltage control of 350 V_{DC} / 700 V_{DC}, and the drive ramps to stop

- dEb (Deceleration Energy Backup) lets the motor decelerate to stop when momentary power

loss occurs. When the power loss is instantaneous, use this function to let the motor decelerate to zero speed. If the power recovers at this time, the drive restarts the motor after the dEb return time.

- Lv return level: Default value depends on the drive power model
  Models for frame A, B, C, D0, D = Pr.06-00 + 60V / 30V (230V models)
  Models for frame E and above = Pr.06-00 + 80V / 40V (230V models)
- Lv level: Default = Pr.06-00
- During dEb operation, other protection such as ryF, ov, oc, occ and EF may interrupt it, and these error codes are recorded.
- The STOP (RESET) command does not work during the dEb auto-deceleration, and the drive continues decelerating to stop. To make the drive coast to stop immediately, use another function (EF) instead.
- The B.B. function does not work when executing dEb. The B.B. function is enabled after the dEb function finishes.
- Even though the Lv warning does not display during dEb operation, if the DC bus voltage is lower than the Lv level, MOx = 10 (Low voltage warning) still operates.
- The following explains the dEb action:
- When the DC voltage drops below the dEb setting level, the dEb function starts to work (soft start relay remains closed), and the drive executes auto-deceleration.
  - Situation 1: Momentary power loss, or too low and unstable power voltage, or power supply sliding down because of sudden heavy load.
    Pr.07-13 = 1, “dEb active, DC bus voltage returns, output frequency does not return” and power recovers.
    When the power recovers and DC bus voltage exceeds the dEb return level, the drive linearly decelerates to 0 Hz and stops. The keypad displays the ”dEb” warning until you manually reset it, so you can see the reason for the stop.

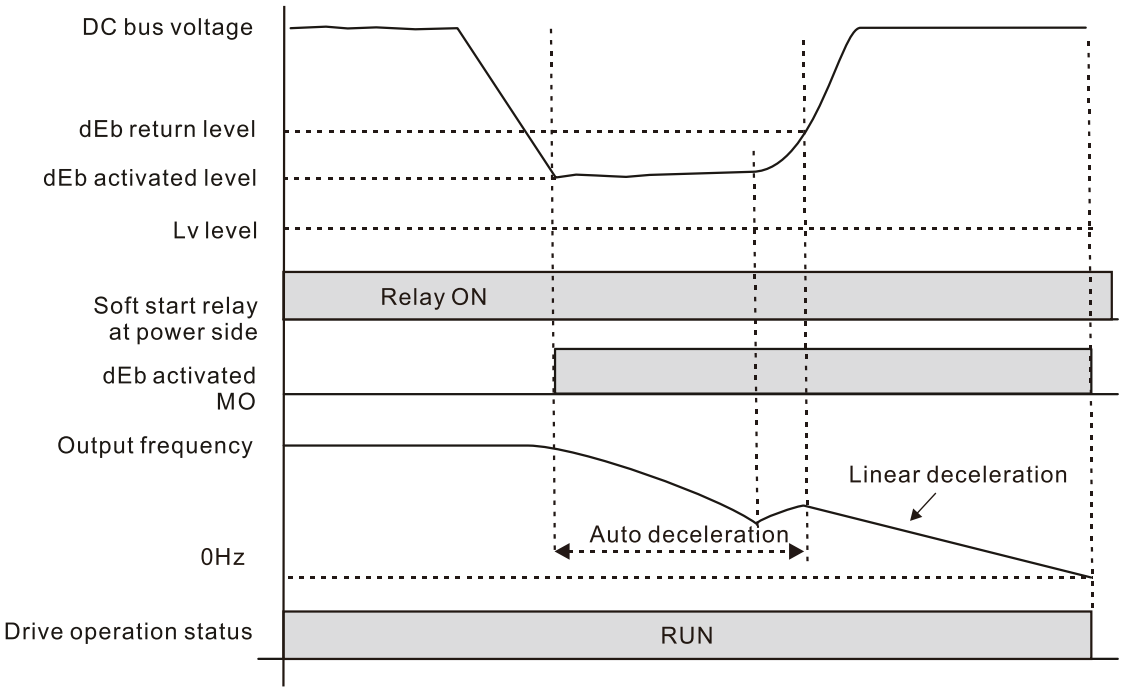

- Situation 2: Momentary power loss, or too low and unstable power voltage, or power supply sliding down because of sudden heavy load.

  Pr.07-13 = 2 “dEb active, DC bus voltage returns, output frequency returns” and power recovers.

  During the dEb deceleration (includes 0 Hz run), if the power recovers to a voltage higher than dEb return level, the drive maintains the frequency for the set time of Pr.07-14 (default = 3 sec.) and then accelerates again. The “dEb” warning on the keypad is automatically cleared.

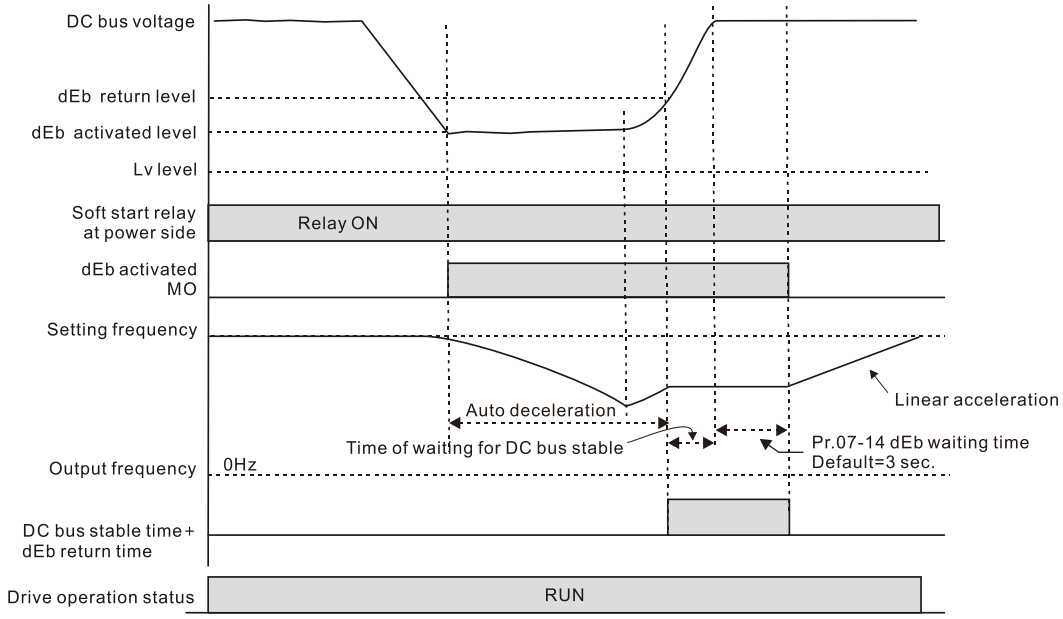

- Situation 3: Unexpected power shut down or power loss

  Pr.07-13 = 1 “dEb active, DC bus voltage returns, the output frequency does not return” and the power does not recover.

  The keypad displays the “dEb” warning and the drive stops after decelerating to the lowest operating frequency. When the DC bus voltage is lower than the Lv level, the drive disconnects the soft start relay until the power completely runs out.

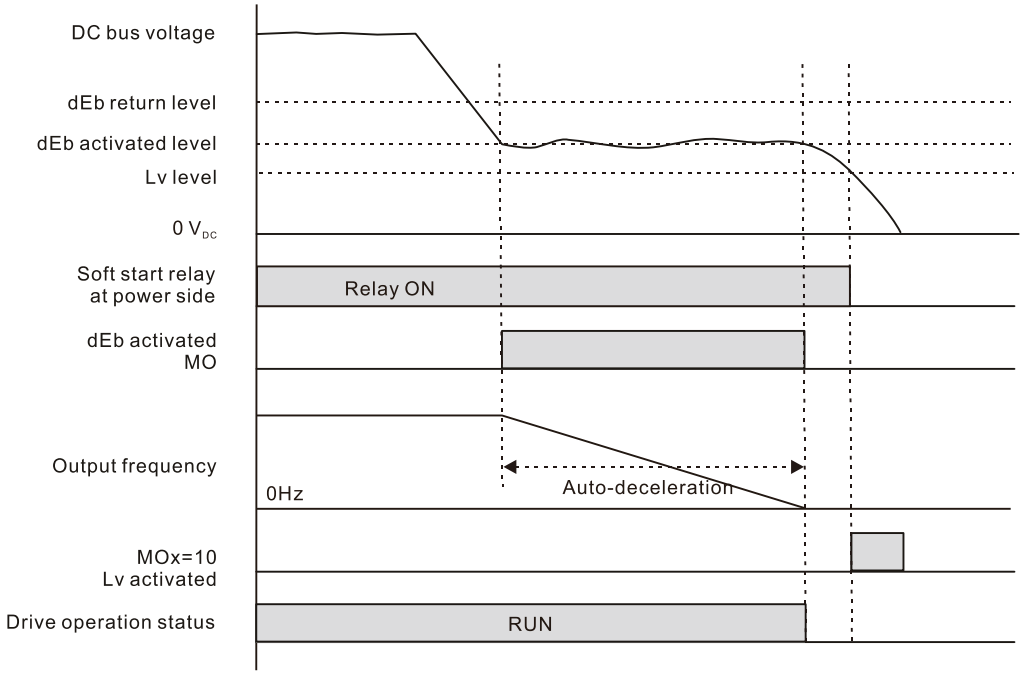

Situation 4:Pr.07-13 = 2 “dEb active, DC bus voltage returns, the output frequency returns” and power does not recover.

The drive decelerates to 0 Hz. The DC bus voltage continues to decrease until the voltage is lower than the Lv level, and then the drive disconnects the soft start relay. The keypad displays “dEb” warning until the drive completely runs out of power.

- Situation 5:

  Pr.07-13 = 2 “dEb low voltage control, when the speed is lower than 1/4 rated motor speed, DC bus voltage rises to 350 V_{DC} / 700 V_{DC}, the drive ramps to stop.

  The drive decelerates to 0 Hz. The DC bus voltage continues to decrease until the voltage is lower than the Lv level, and then the drive disconnects the soft start relay. The soft start relay closes again after the power recovers and the DC bus voltage is higher than the Lv return level. When the DC bus voltage is higher than the dEb return level, the drive maintains the frequency for the set time of Pr.07-14 (default = 3 sec.) and starts to accelerate linearly, and the dEb warning on the keypad is automatically cleared.

- Situation 6:

  Pr.07-13 = 4, dEb high-voltage control

  (1) When dEb occurs, the DC bus voltage control level rises to 350 V_{DC} / 700 V_{DC} to ramp to stop. Even though the power recovers and the frequency does not return, dEb activates until the motor decelerates to 0Hz.

  (2) When dEb activates, it sends dEb warning. When the output frequency reaches 0Hz, the operation status is STOP and disables the dEb function, the dEb warning continues.

  (3) If power does not recover, the DC bus voltage drops until reaches the Lv level, the drive LvS error occurs (keypad displays LvS error that covers the dEb display), the Soft Start Relay will be OFF.

07-14 dEb Function Reset Time

Default: 3.0

Settings 0.0–25.0 sec.

dEb (Deceleration Energy Backup) lets the motor decelerate to stop when momentary power loss occurs. When the power loss is instantaneous, use this function to let the motor decelerate to zero speed.

07-15 Dwell Time at Acceleration

Default: 0.00

Settings 0.00–600.00 sec.

07-17 Dwell Time at Deceleration

Default: 0.00

Settings 0.00–600.00 sec .

07-16 Dwell Frequency at Acceleration

Default: 0.00

Settings 0.00–599.00 Hz

07-18 Dwell Frequency at Deceleration

Default: 0.00

Settings 0.00–599.00 Hz

- In the heavy load situation, Dwell can make stable output frequency temporarily, such as crane or elevator.
- For heavy load applications, use Pr.07-15–Pr.07-18 to avoid ov or oc protection.

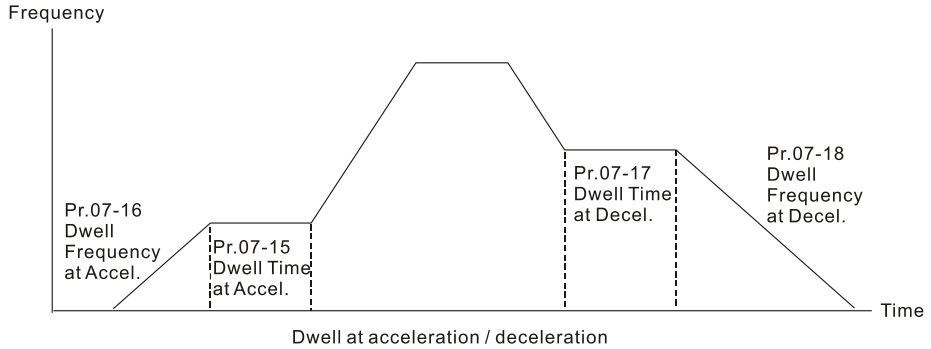

07-19 Fan Cooling Control

Default: 0

Settings
0: Fan is always ON
1: Fan is OFF after AC motor drive stops for one minute
2: Fan is ON when the AC motor drive runs; fan is OFF when the AC motor drive stops
3: Fan turns ON when temperature (IGBT) reaches around 60°C
4: Fan is always OFF

- Use this parameter to control the fan.
- 0: Fan runs immediately when the drive power is turned ON.
- 1: Fan runs when the AC motor drive runs. One minute after the AC motor drive stops, the fan is OFF.
- 2: Fan runs when the AC motor drive runs and stops immediately when AC motor drive stops.
- 3: Fan is ON when IGBT or capacitance temperature is > 60°C
  Fan is OFF when IGBT and capacitance temperature are both < 40°C, and the drive stops running
- 4: Fan is always OFF
- The control parameters for the applicable fan of each frame are as below:

Frame	Heat Sink Fan	Capacitor Fan
A	Pr.07-19	No capacitor fan
B	Pr.07-19	Pr.07-19
C	Pr.07-19	Pr.07-19 230V models: always ON
D0	Pr.07-19	Pr.07-19
D	Pr.07-19	ON
E	Pr.07-19	Pr.07-19
F	Pr.07-19	Pr.07-19
G	Pr.07-19	No capacitor fan
H	Pr.07-19	No capacitor fan

07-20 Emergency Stop (EF) & Force to Stop Selection

Default: 0

Settings
0: Coast to stop
1: Stop by the first deceleration time
2: Stop by the second deceleration time
3: Stop by the third deceleration time
4: Stop by the fourth deceleration time
5: System deceleration
6: Automatic deceleration

When the multi-function input terminal setting is set to 10 (EF input) or 18 (force to stop) and the terminal contact is ON, the drive stops according to the setting of this parameter.

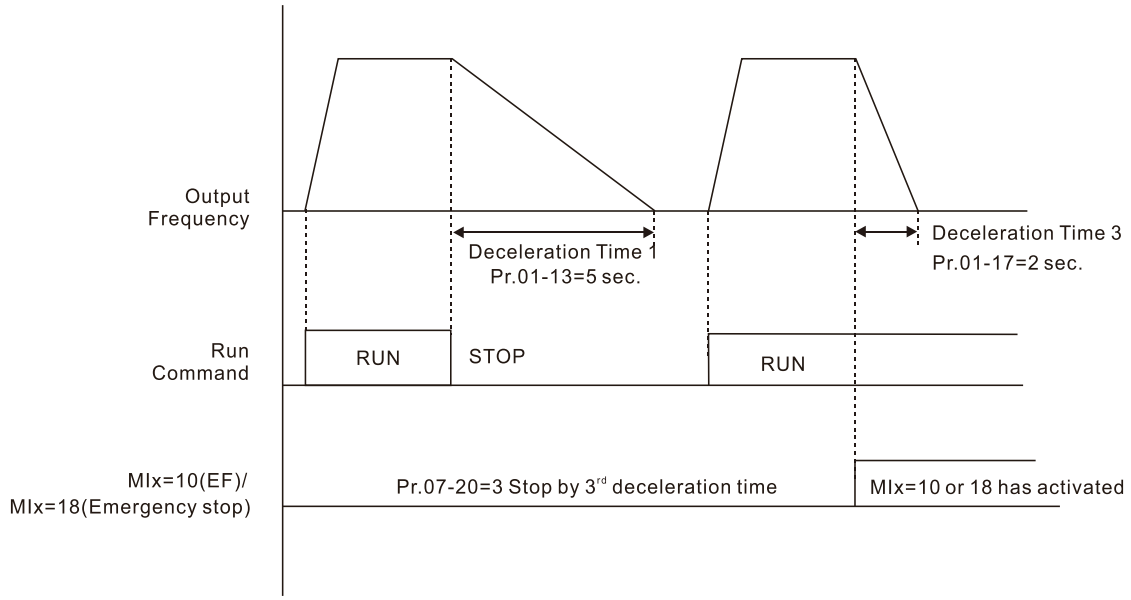

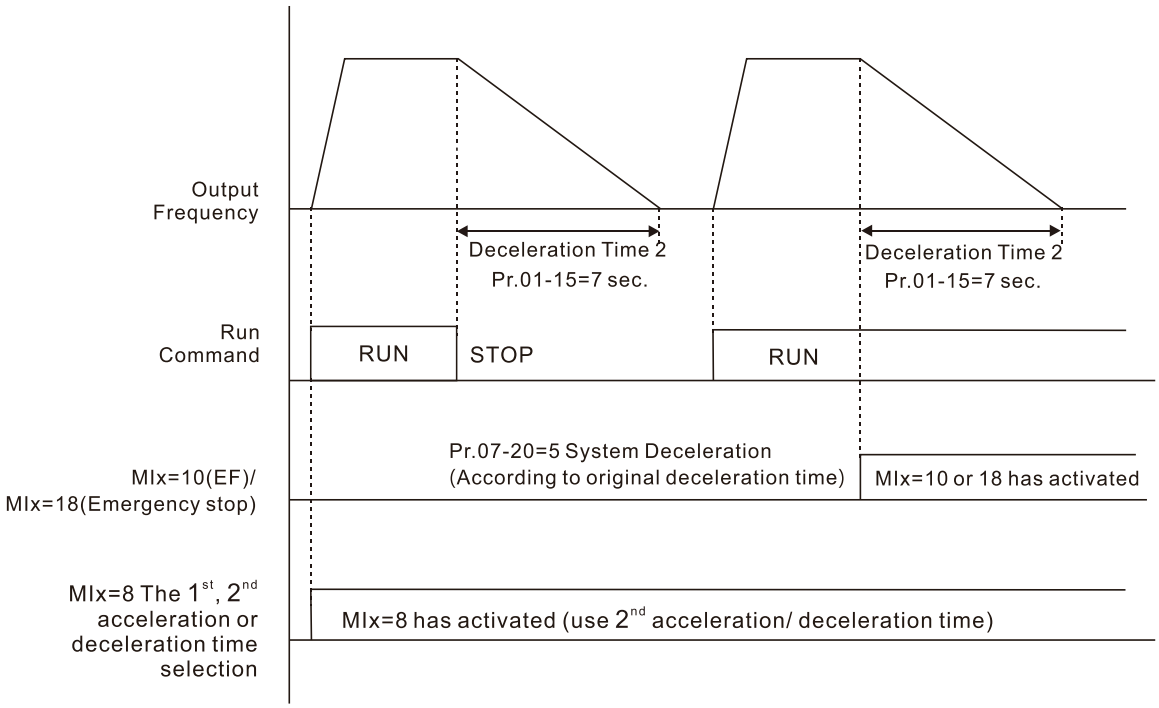

07-21 Automatic Energy-saving (AES) Selection

Default: 0

Settings 0: Disabled

1: Power factor energy-saving improvement (for VF, SVC, VFPG control modes)

2: Automatic energy-saving optimization (for VF, SVC, VFPG control modes)

Different control modes for Pr.07-21:

Motor	Induction Motor (IM)					Permanent Magnet Synchronous Motor (PM)				Synchronous Reluctance Motor (SynRM)
Control Mode	VF	VFPG	SVC	FOCPG	FOC	PM SVC	FOCPG PM	PM FOC	HFI	
1: Power factor energy-saving improvement	✓	✓	✓							
2: Automatic energy-saving optimization	✓	✓	✓							

Power factor energy-saving improvement (Pr.07-21 = 1):

- When the automatic energy-saving function is enabled, the drive runs with full-voltage during acceleration and deceleration and runs with the optimal voltage that is automatically calculated by the load power during constant operation. It is not recommended to use this function for applications that require frequent load changes or when the load is close to full-load during operation.
- The prerequisites for valid power factor energy-saving improvement (Pr.07-21 = 1) are:
  - A. Power factor angle is larger than Pr.07-43 (Targeted Power Factor Angle for AES)
  - B. Output frequency is larger than Pr.07-41 (Minimum Frequency for AES)
  - C. The drive is in a steady-state output frequency status
  - D. Time for steady-state output frequency is larger than Pr.07-42 (Delay Time for AES)
  - E. Output current is smaller than or equal to 90% of the drive's rated current
- The prerequisites for invalid power factor energy-saving improvement (Pr.07-21 = 1) are:
  1. A changing output frequency
  2. Output current is larger than 90% of the drive's rated current

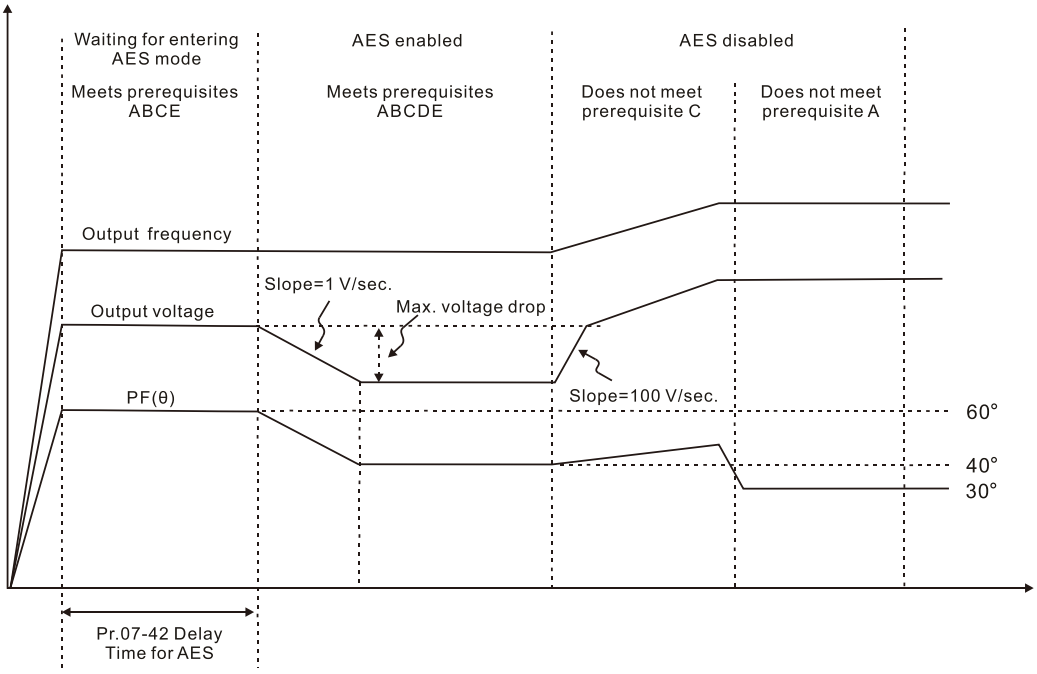

Automatic energy-saving optimization (Pr.07-21 = 2):

- Controls the output voltage to minimize the motor's losses for optimal energy-saving. The motor's losses are calculated by motor parameter auto-tuning and energy-saving coefficient.
- Automatic energy-saving optimization control is according to the block diagram below:

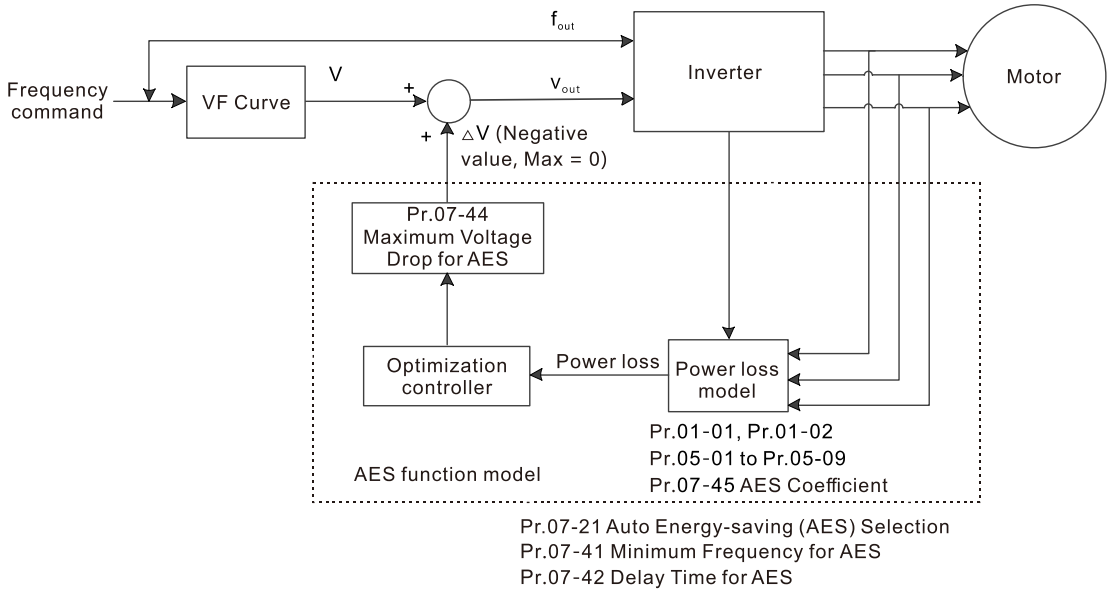

- The prerequisites for valid automatic energy-saving optimization (Pr.07-21 = 2) are:
  A. Output frequency is larger than Pr.07-41 (Minimum Frequency for AES)
  B. The drive is in a steady-state output frequency status
  C. Time for steady-state output frequency is larger than Pr.07-42 (Delay Time for AES)
- The prerequisites for invalid automatic energy-saving optimization (Pr.07-21 = 2) are:
  1. A changing output frequency
  2. The loss model automatically determines the voltage drops when the drive is in normal and heavy duty. If there is no more voltage that can be adjusted, that is, the voltage drop is already optimized, AES is invalid.

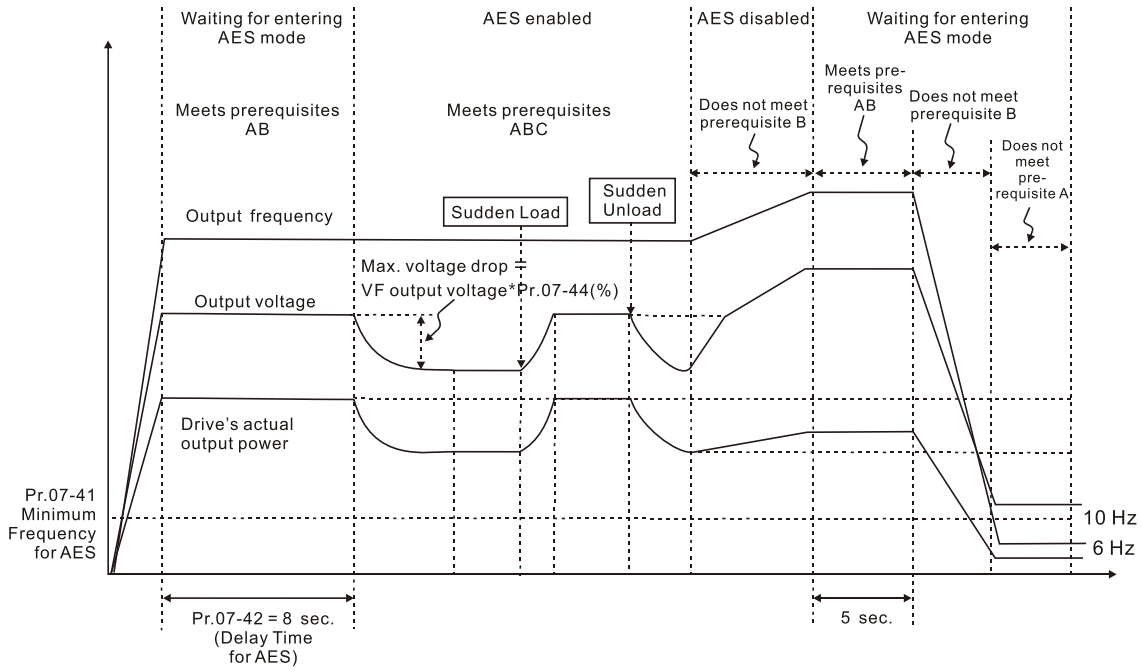

- The energy-saving function is invalid during the drive's acceleration and deceleration. To make it valid, the prerequisites need to be verified again.

07-23 Automatic Voltage Regulation (AVR) Function

Default: 0

Settings 0: Enable AVR
1: Disable AVR
2: Disable AVR during deceleration

- The rated voltage of the motor is usually 200–240 V_{AC} (380–480 V_{AC}), 60 Hz / 50 Hz and the input voltage of the AC motor drive may vary between 170–264 V_{AC} (323–528 V_{AC}), 50 Hz / 60 Hz. Therefore, when the AC motor drive is used without the AVR function, the output voltage is the same as the input voltage. When the motor runs at the voltage exceeding 12–20% of the rated voltage, it causes higher temperature, damaged insulation, and unstable torque output, which result in losses due to shorter motor lifetime.
- The AVR function automatically regulates the output voltage of the AC motor drive to the motor's rated voltage when the input voltage exceeds the motor's rated voltage. For example, if the V/F curve is set at 200 V_{AC} / 50 Hz and the input voltage is at 200–264 V_{AC}, then the drive automatically reduces the output voltage to the motor to a maximum of 200 V_{AC} / 50 Hz. If the input voltage is at 170–200 V_{AC}, the output voltage to motor is in direct proportion to the input voltage.
- 0: When the AVR function is enabled, the drive calculates the output voltage according to the actual DC bus voltage. The output voltage does NOT change when the DC bus voltage changes.
- 1: When the AVR function is disabled, the drive calculates the output voltage according to the actual DC bus voltage. The output voltage changes with the DC bus voltage, and may cause insufficient current, over-current or oscillation.
- 2: The drive disables the AVR function only during deceleration to stop, and at this time, you can accelerate the braking to achieve the same result.
- When the motor ramps to stop, disable the AVR function to shorten the deceleration time. Then, use with the auto-acceleration and auto-deceleration functions to make the motor's deceleration more stable and quicker.
- When the control mode is set as FOCPG or TQCPG, it is recommended to set this parameter to 0 (enable AVR).

07-24 Torque Command Filter Time

Default: 0.500

Settings 0.001–10.000 sec.

- Only applicable in IMVF and PMSVC control modes.
- When the time constant setting is too large, the control is stable but the control response is slow. When the time constant setting is too small, the control response is faster but the control may be unstable. For optimal setting, adjust the setting based on the control stability or the control response.

07-25 Slip Compensation Filter Time

Default: 0.100

Settings 0.001–10.000 sec.

- Only applicable in IMSVC control mode.
- Change the compensation response time with Pr.07-24 and Pr.07-25.
- If you set Pr.07-24 and Pr.07-25 to 10 seconds, the compensation response time is the slowest; however, the system may be unstable if you set the time too short.

07-26 Torque Compensation Gain

Default: 0

Settings IM: 0–10 (when Pr.05-33 = 0)
PM: 0–5000 (when Pr.05-33 = 1 or 2)

- Only applicable in IMVF and PMSVC control modes.
- With a large motor load, a part of the drive output voltage is absorbed by the stator-winding resistor; therefore, the air gap magnetic field is insufficient. This causes insufficient voltage at motor induction and results in excessive output current but insufficient output torque. Auto-torque compensation can automatically adjust the output voltage according to the load and keep the air gap magnetic fields stable to get the optimal operation
- In the V/F control, the voltage decreases in direct proportion with decreasing frequency. The torque decreases at low speed because of a decreasing AC impedance and an unchanged DC resistance. The auto-torque compensation function increases the output voltage at low frequency to get a higher starting torque.
- When the compensation gain is set too large, it may cause motor over-flux and result in a too large output current of the drive, motor overheating or trigger the drive's protection function.
- This parameter affects the output current when the drive runs. But the effect is smaller at the low-speed area.
- Set this parameter higher when the no-load current is too large, but the motor may vibrate if the setting is too high. If the motor vibrates when operating, reduce the setting.

07-27 Slip Compensation Gain

Default: 0.00
(1.00 in SVC mode)

Settings 0.00–10.00

- Only applicable in IMSVC control mode.
- The induction motor needs constant slip to produce electromagnetic torque. It can be ignored at higher motor speeds, such as rated speed or 2–3% of slip.
- However, during the drive operation, the slip and the synchronous frequency are in reverse proportion to produce the same electromagnetic torque. The slip is larger with the reduction of synchronous frequency. Moreover, the motor may stop when the synchronous frequency decreases to a specific value. Therefore, the slip seriously affects the motor speed accuracy at low speed.
- In another situation, when you use an induction motor with the drive, the slip increases when the load increases. It also affects the motor speed accuracy.

Use this parameter to set the compensation frequency, and reduce the slip to maintain the synchronous speed when the motor runs at the rated current in order to improve the accuracy of the drive. When the drive output current is higher than Pr.05-05 (No-load Current for Induction Motor 1 (A)), the drive compensates the frequency according to this parameter.

This parameter is set to 1.00 automatically when Pr.00-11 (Speed Control Mode) is changed from V/F mode to vector mode. Otherwise, it is automatically set to 0.00. Apply the slip compensation after load and acceleration. Increase the compensation value from small to large gradually; add the output frequency to the [motor rated slip × Pr.07-27 (Slip Compensation Gain)] when the motor is at the rated load. If the actual speed ratio is slower than expected, increase the parameter setting value; otherwise, decrease the setting value.

07-29 Slip Deviation Level

Default: 0.0

Settings 0.0–100.0%
0: No detection

07-30 Over-slip Deviation Detection Time

Default: 1.0

Settings 0.0–10.0 sec.

07-31 Over-slip Deviation Treatment

Default: 0

Settings 0: Warn and continue operation
1: Fault and ramp to stop
2: Fault and coast to stop
3: No warning

Pr.07-29 to Pr.07-31 set the allowable slip level / time and the over-slip treatment when the drive is running.

07-32 Motor Oscillation Compensation Factor

Default: 1000

Settings 0–10000
0: Disable

If there are current wave motions which cause severe motor oscillation in some specific area, setting this parameter can effectively improve this situation. (When running with high frequency or PG, set this parameter to 0. When the current wave motion occurs in low frequency and high power, increase the value for Pr.07-32.)

07-33 Auto-restart Interval of Fault

Default: 60.0

Settings 0.0–6000.0 sec.

When a reset / restart occurs after a fault, the drive uses Pr.07-33 as a timer and starts counting the numbers of faults within this time period. Within this period, if the number of faults does not exceed the setting for Pr.07-11, the counting clears and starts from 0 when the next fault occurs.

07-38 PMSVC Voltage Feed Forward Gain

Default: 1.00

Settings 0.00–2.00

- Adjusts the PMSVC voltage feedback forward gain, and to meet the demand of rapid feedback application.
- Pr.07-38 = 1.00 means forward feedback = Ke × motor rotor speed
- Refer to Section 12-2 “PMSVC adjustment” for details.

07-41 Minimum Frequency for AES

Default: 10.00

Settings 0.00–40.00 Hz

- The drive’s output frequency must be larger than Pr.07-41 to make the drive determine whether to run in a steady-state output frequency.
- In general, larger power and voltage can give more energy-savings; lower power and voltage produce less energy-savings. However, too low power and voltage are not suitable for low-speed operation because it needs a larger starting current. Pr.07-41 is the parameter that limits the minimum frequency when AES is enabled (Pr.07-41 to Pr.01-00 is the frequency range – from minimum to maximum – that you can use for the AES function).

07-42 Delay Time for AES

Default: 5

Settings 0–600 sec.

- When the drive runs in a steady-state output frequency, and exceeds Pr.07-42 setting time, the drive enters the energy-saving mode.

07-43 Targeted Power Factor Angle for AES

Default: 40.00

Settings 0.00–65.00°

- Use this function when Pr.07-21 = 1. If the power factor angle is larger than Pr.07-43, the drive continuously adjusts the energy-saving until it is smaller than Pr.07-43.
- Pr.07-43 is the angle θ between active power and reactive power. The smaller COSθ, the lower the reactive power, and the lower the loss.

07-44 Maximum Voltage Drop for AES

Default: 60.00

Settings 0.00–70.00%

- Defines the maximum allowed voltage drop when the drive is in energy-saving mode.
- The drive has bigger energy-saving efficiency when running in no-load or light-load. But the output voltage drop is not unlimited. Use Pr.07-44 to limit the maximum ratio (%) of the output voltage drop.

  Example:

  (1) If Pr.01-01 = 60 Hz, Pr.01-02 = 380 V_{AC}, the frequency command is 60Hz and the actual voltage output is 371.2 V_{AC}, and Pr.07-44 = 60%, then the maximum voltage drop = 380V (the voltage command corresponding to the frequency command in the VF table: 60 Hz

corresponds to 380V) × 60% = 228 V_{AC}.

(2) If the frequency command is 30 Hz, the corresponding voltage is 200 V_{AC} in the VF table, and Pr.07-44 = 60%, then the maximum voltage drop = 200V × 60% = 120 V_{AC}.

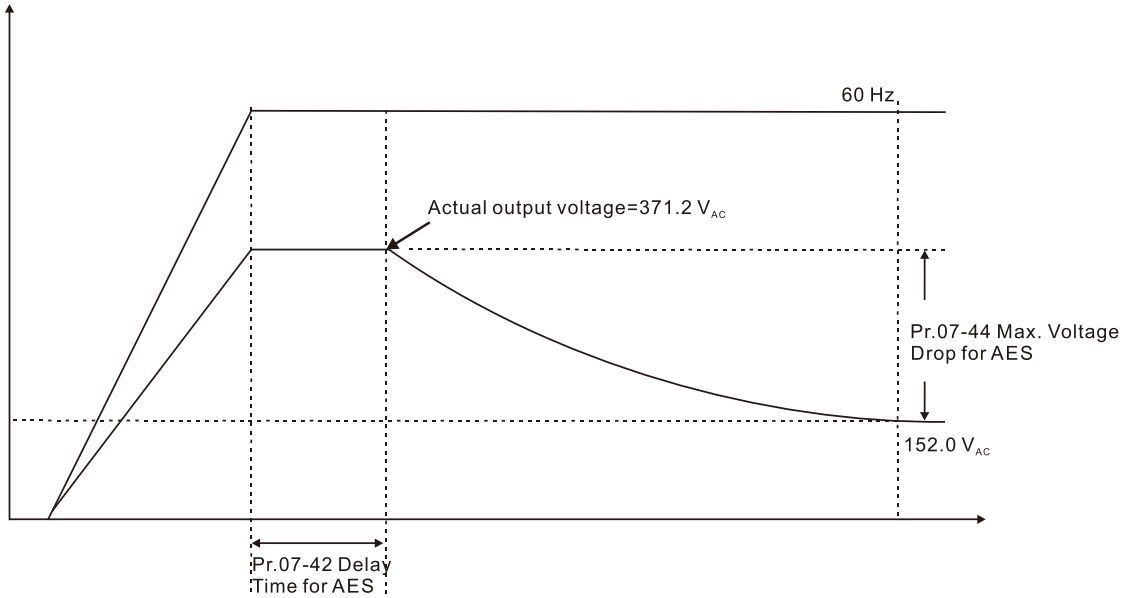

07-45 AES Coefficient

Default: 100

Settings 0–10000%

- Defines the motor power loss constant. Default 100% corresponds to the drive's iron loss constant that is calculated by motor parameter auto-tuning or motor nameplate information.
- Pr.07-45 affects the final steady-state output voltage value for the energy-saving control. The larger the Pr.07-45 setting value, the higher the steady-state output voltage (smaller voltage drop). The smaller the Pr.07-45 setting value, the lower the steady state output voltage (larger voltage drop).
- See below for the flowchart of AES adjustment with motor parameter auto-tuning (recommended):

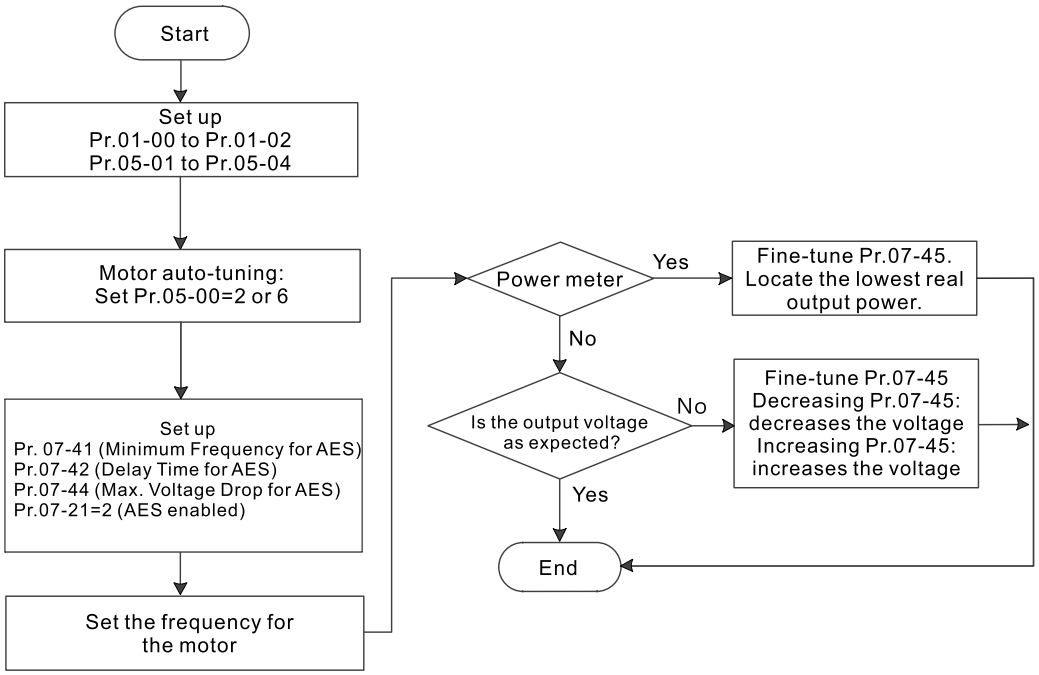

See below for the flowchart of AES adjustment without motor parameter auto-tuning (not recommended):

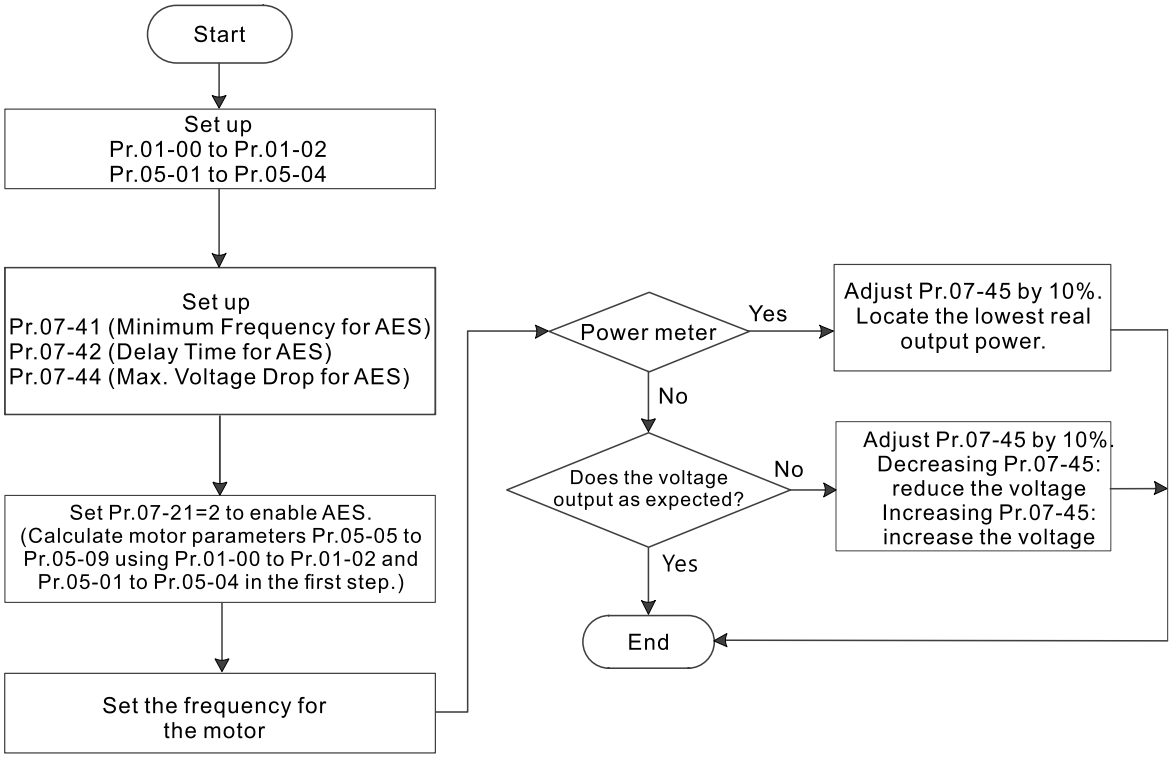

07-62 dEb Gain (Kp)

Default: 8000

Settings 0–65535

07-63 dEb Gain (Ki)

Default: 150

Settings 0–65535

Sets the PI gain of DC bus voltage controller when the dEb function activates.

If the DC bus voltage drops too fast, or the speed oscillation occurs during deceleration after the dEb function activates, adjust Pr.07-62 and Pr.07-63. Increase the Kp setting to quicken the control response, but the oscillation may occur if the setting is too large. Use Ki parameter to decrease the steady-state error to zero, and increase the setting to quicken the response speed.

[This page intentionally left blank]

08 High-function PID Parameters

✓ You can set this parameter during operation.

✓ 08-00 Terminal Selection of PID Feedback

Default: 0

Settings
0: No function
1: Negative PID feedback: by analog input (Pr.03-00–03-02)
2: Negative PID feedback: by PG card pulse input, without direction (Pr.10-02)
3: Negative PID feedback: by PG card pulse input, with direction (Pr.10-02)
4: Positive PID feedback: by analog input (Pr.03-00–03-02)
5: Positive PID feedback: by PG card pulse input, without direction (Pr.10-02)
6: Positive PID feedback: by PG card pulse input, with direction (Pr.10-02)
7: Negative PID feedback: by communication protocol
8: Positive PID feedback: by communication protocol

📖 Pr.08-00 ≠ 0 enables the PID function.

📖 Negative feedback:
Error = + Target value (set point) – Feedback. Use negative feedback when the detection value increases if the output frequency increases.

📖 Positive feedback:
Error = - Target value (set point) + Feedback. Use positive feedback when the detection value decreases if the output frequency increases.

📖 When Pr.08-00 ≠ 7 or ≠ 8, the input value is disabled. The setting value does not remain when the drive is powered off.

📖 When Pr.08-00 ≠ 0, the related applicable parameters include:

- Pr.00-20 (Master frequency command source (AUTO) / Source selection of the PID target)
- Pr.03-00–03-02:
  When Pr.00-20 = 2 (External analog input), set Pr.03-00–03-02 = 4 (PID target value)
  When Pr.08-00 = 1 or 4, set Pr.03-00–03-02 = 5 (PID feedback signal)

Refer to the following description for details.

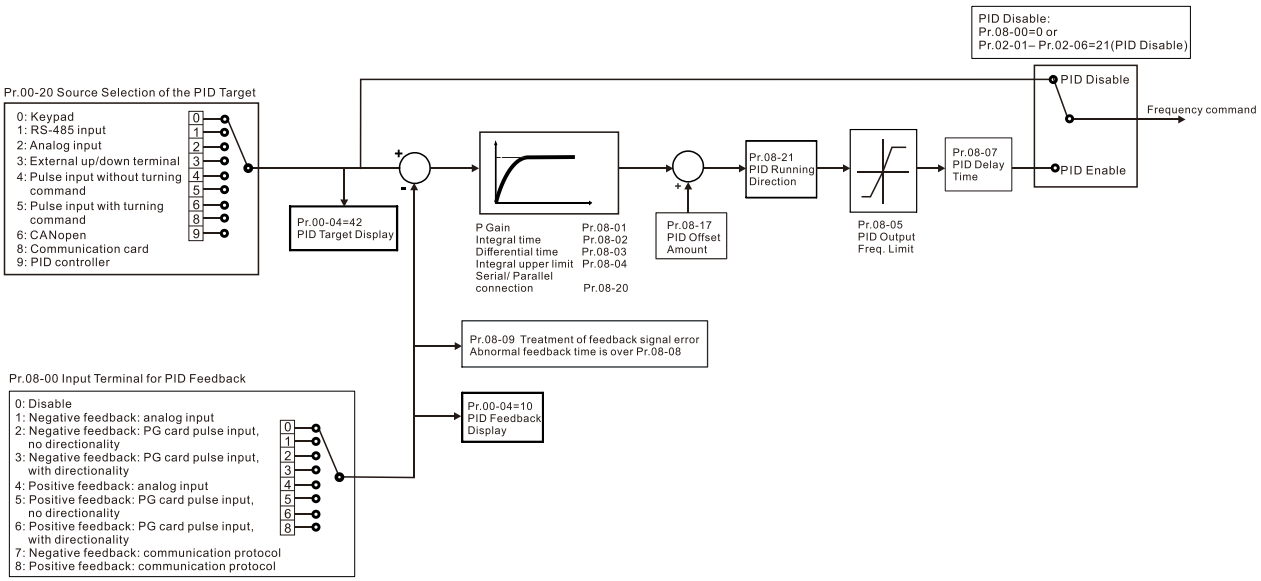

00-20	Master Frequency Command Source (AUTO) / Source Selection of the PID Target

Default: 0

Settings
0: Digital keypad
1: RS-485 communication input
2: External analog input (Refer to Pr.03-00–03-02)
3: External UP / DOWN terminal (multi-function input terminals)
4: Pulse input without direction command (Pr.10-16 without considering direction), use with PG card
5: Pulse input with direction command (refer to Pr.10-16), use with PG card
6: CANopen communication card
8: Communication card (does not include CANopen card)
9: PID controller

03-00	AVI Analog Input Selection
03-01	ACI Analog Input Selection
03-02	AUI Analog Input Selection

Default: 0

Settings
4: PID target value
5: PID feedback signal

Common applications for PID control:

- Flow control: Use a flow sensor to feedback the flow data and perform accurate flow control.
- Pressure control: Use a pressure sensor to feedback the pressure data and perform precise pressure control.
- Air volume control: Use an air volume sensor to feedback the air volume data to achieve excellent air volume regulation.
- Temperature control: Use a thermocouple or thermistor to feedback temperature data for comfortable temperature control.
- Speed control: Use a speed sensor-to feedback motor shaft speed or input another machine speed as a target value for synchronous control.

PID control loop:

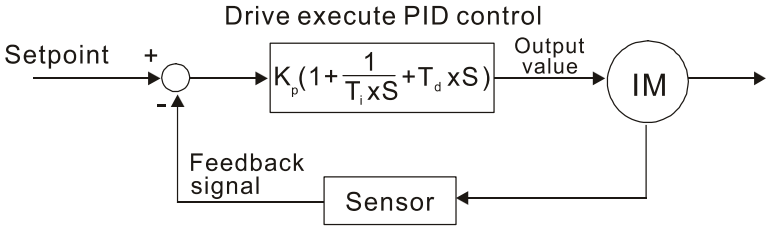

K_P Proportional Gain (P), T_i Integral Time (I), T_d Differential Time (D), S Calculation

Concept of PID control

- Proportional gain (P):
  The output is proportional to input. With only proportional gain control, there is always a steady-state error.

Adjustment: Turn off the Ti and Td, or remain Ti and Td in constant value, then adjust the proportional gain (P).
Increase: Faster status feedback, but excessive adjustment increases the overshoot.
Decrease: Smaller overshoot, but excessive adjustment slows down the transient response.

📖 Integral time (I):
The controller output is proportional to the integral of the controller input. When an automatic control system is in a steady state and a steady-state error occurs, the system is called a System with Steady-state Error To eliminate the steady-state error, add an “integral part” to the controller. The integral time controls the relation between integral part and the error. The integral part increases over time even if the error is small. It gradually increases the controller output to eliminate the error until it is zero. This stabilizes the system without a steady-state error by using proportional gain control and integral time control.

Adjustment: The integral time (I) accumulates from the time difference, if the vibration cycle is longer than the setting for integral time, the integration enhances. Increase the integral time (I) to reduce the vibration.
Increase: Reduce the overshoot, excessive adjustment causes worse transient response.
Decrease: Faster transient response, but the transient time will be longer, and takes more time to achieve the steady state. Excessive adjustment causes larger overshoot.

📖 Differential control (D):
The controller output is proportional to the differential of the controller input. During elimination of the error, oscillation or instability may occur. Use the differential control to suppress these effects by acting before the error. That is, when the error is near zero, the differential control should be zero. Use proportional gain (P) and differential control (D) to improve the system state during PID adjustment.

Adjustment: When the vibration cycle is shorter and continuous, it means that the differential time setting is too large, and causes excessive output. Decrease the setting of D gain to reduce the vibration. If the D gain is set to 0, adjust the PID control again.

Using PID control in a constant pressure pump feedback application:
Set the application’s constant pressure value (bar) to be the set point of PID control. The pressure sensor sends the actual value as the PID feedback value. After comparing the PID set point and PID feedback, an error displays. The PID controller calculates the output by using proportional gain (P), integral time (I) and differential time (D) to control the pump. It controls the drive to use a different pump speed and achieves constant pressure control by using a 4–20 mA signal corresponding to 0–10 bar as feedback to the drive.

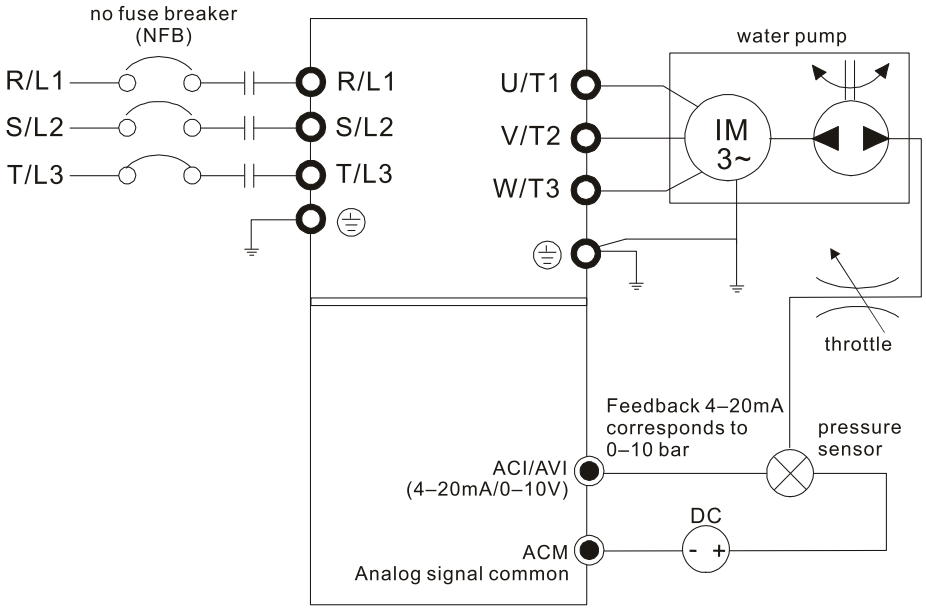

- Pr.00-04 = 10 (Display PID feedback (b) (%)).
- Pr.01-12 Acceleration Time is set according to actual conditions.
- Pr.01-13 Deceleration Time is set according to actual conditions.
- Pr.00-21 = 0, operate through the digital keypad.
- Pr.00-20 = 0, the digital keypad controls the set point.
- Pr.08-00 = 1 (Negative PID feedback from analog input)
- ACI analog input Pr.03-01 = 5, PID feedback signal.
- Pr.08-01–08-03 is set according to actual conditions:
  If there is no oscillation in the system, increase Pr.08-01 (Proportional Gain (P))
  If there is no oscillation in the system, decrease Pr.08-02 (Integral Time (I))
  If there is no oscillation in the system, increase Pr.08-03 (Differential Time (D))

🕮 Refer to Pr.08-00 to Pr.08-21 for PID parameter settings.

08-01 Proportional Gain (P)

Default: 1.0

Settings 0.0–500.0

🕮 1.0: Kp gain is 100%; if the setting is 0.5, Kp gain is 50%.

🕮 Sets the proportional gain to determine the deviation response speed. The higher the proportional gain, the faster the response speed. Eliminates the system deviation; usually used to decrease the deviation and get faster response speed, it also reduces the steady-state error. If you set the value too high, overshoot occurs, and it may cause system oscillation and instability.

🕮 If you set the other two gains (I and D) to zero, proportional control is the only effective parameter.

08-02 Integral Time (I)

Default: 1.00

Settings 0.00–100.00 sec.
0.00: No integral

🕮 Use the integral controller to eliminate the deviation during stable system operation. The integral

control does not stop working until the deviation is zero. The integral is affected by the integral time. The smaller the integral time, the stronger integral action. It is helpful to reduce overshoot and oscillation for a stable system. Accordingly, the speed to lower the steady-state deviation decreases. The integral control is often used with the other two controls for the PI controller or PID controller.

- Sets the integral time of the I controller. When the integral time is long, there is a small I controller gain, with slower response and slow external control. When the integral time is short, there is a large I controller gain, with faster response and rapid external control.
- When the integral time is too short, it may cause overshoot or oscillation for the output frequency and system.
- Set Integral Time to 0.00 to disable the I controller.

08-03 Differential Time (D)

Default: 0.00

Settings 0.00–1.00 sec.

- Use the differential controller to show the system deviation change, as well as to preview the change in the deviation. You can use the differential controller to eliminate the deviation in order to improve the system state. Using a suitable differential time can reduce overshoot and shorten adjustment time; however, the differential operation increases noise interference. Note that a too large differential causes more noise interference. In addition, the differential shows the change and the output is 0 when there is no change. Note that you cannot use the differential control independently. You must use it with the other two controllers for the PD controller or PID controller.
- Sets the D controller gain to determine the deviation change response. Using a suitable differential time reduces the P and I controllers overshoot to decrease the oscillation for a stable system. A differential time that is too long may cause system oscillation.
- The differential controller acts on the change in the deviation and cannot reduce the interference. Do not use this function when there is significant interference.

08-04 Upper Limit of Integral Control

Default: 100.0

Settings 0.0–100.0%

- Defines an upper bound for the integral gain (I) and therefore limits the master frequency. The formula is: Integral upper bound = Maximum Operation Frequency (Pr.01-00) × Pr.08-04 %.
- An excessive integral value causes a slow response due to sudden load changes and may cause motor stall or machine damage. If so, decrease it to a proper value.

08-05 PID Output Command Limit

Default: 100.0

Settings 0.0–110.0%

- Defines the percentage of the output frequency limit during the PID control. The formula is Output Frequency Limit = Maximum Operation Frequency (Pr.01-00) × Pr.08-05 %.

08-06 PID Feedback Value by Communication Protocol

Default: Read only

Settings -200.00–200.00%

Use communications to set the PID feedback value when the PID feedback input is set to communications (Pr.08-00 = 7 or 8).

08-07 PID Delay Time

Default: 0.0

Settings 0.0–35.0 sec.

08-20 PID Mode Selection

Default: 0

Settings 0: Serial connection
1: Parallel connection

0: Serial connection, use conventional PID control structure.
1: Parallel connection, the proportional gain, integral gain and differential gain are independent. You can customize the P, I and D value to fit your application.

Pr.08-07 determines the primary low pass filter time when in PID control. Setting a large time constant may slow down the drive's response speed.

PID control output frequency is filtered with a primary low pass function. This function can filter a mix frequencies. A long primary low pass time means the filter degree is high and a short primary low pass time means the filter degree is low.

Inappropriate delay time setting may cause system oscillation.

PI Control:
Controlled only by the P action, so the deviation cannot be entirely eliminated. In general, to eliminate residual deviations, the P + I controls. When you use the PI control, it eliminates the deviation caused by the targeted value changes and the constant external interferences. However, if the I action is too powerful, it delays the response when there is rapid variation. You can use the P action by itself to control the loading system with the integral components.

PD Control:
When deviation occurs, the system immediately generates an operation load that is greater than the load generated only by the D action to restrain deviation increment. If the deviation is small, the effectiveness of the P action decreases as well. The control objects include applications with integral component loads, which are controlled by the P action only. Sometimes, if the integral component is functioning, the whole system may oscillate. In this case, use the PD control to reduce the P action's oscillation and stabilize the system. In other words, this control is useful with no brake function's loading over the processes.

PID Control:
Use the I action to eliminate the deviation and the D action to reduce oscillation; then combine this with the P action for the PID control. Use the PID method for a control process with no deviations, high accuracies and a stable system.

Serial Connection

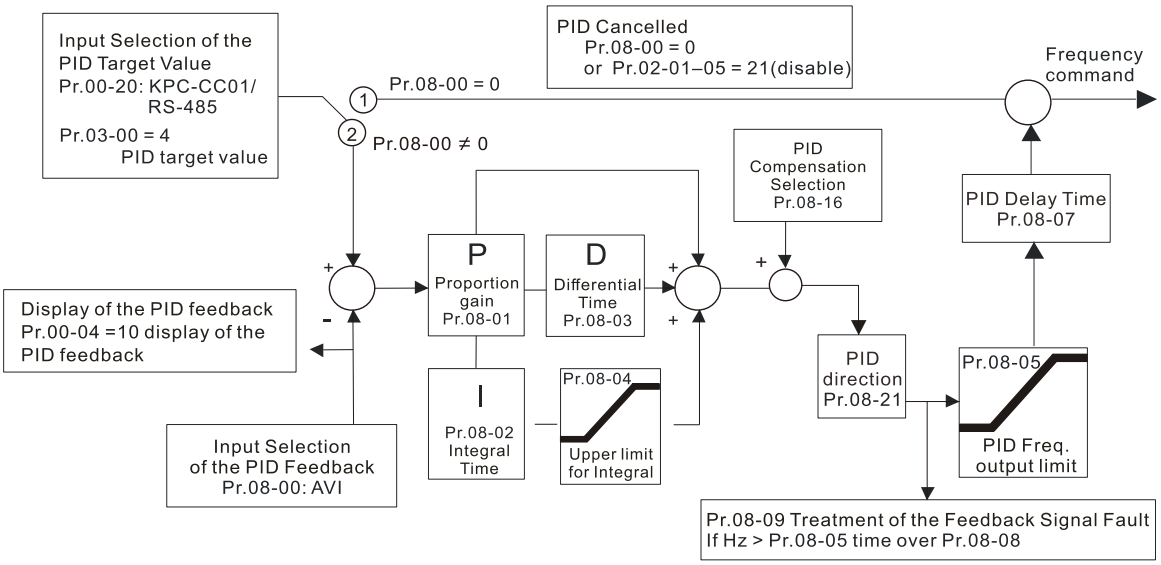

Parallel Connection

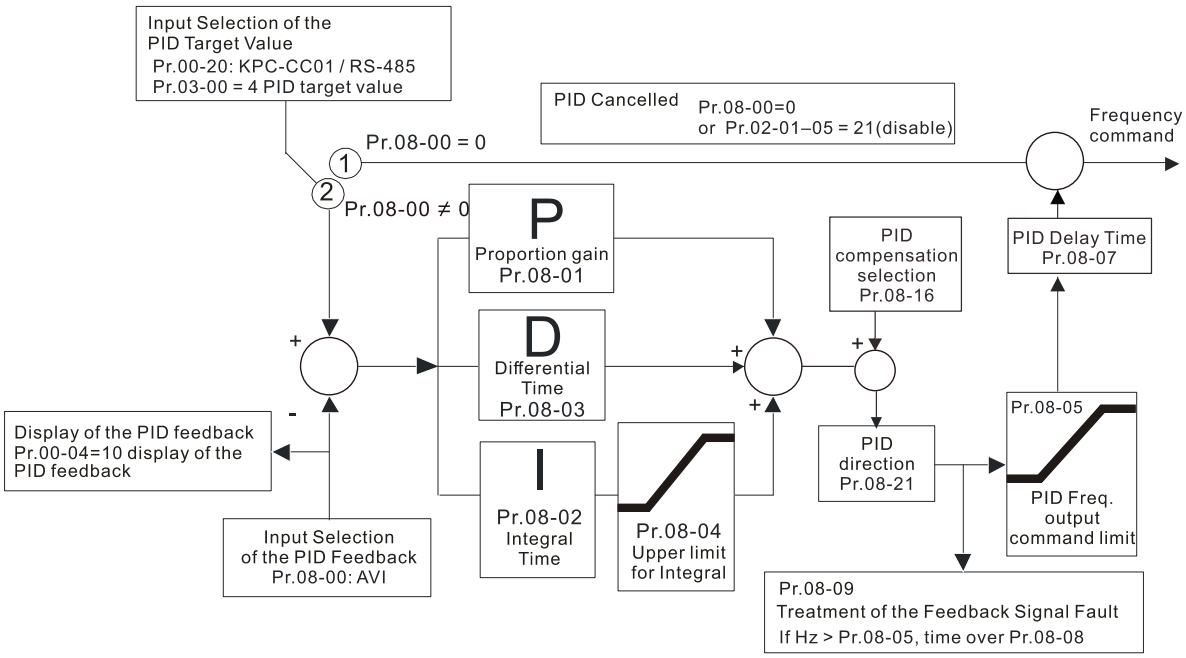

08-08 Feedback Signal Detection Time

Default: 0.0

Settings 0.0–3600.0 sec.

- Valid only when the feedback signal is ACI (4–20 mA).
- This parameter sets the detection time for abnormal PID signal feedback. You can also use it when the system feedback signal response is extremely slow. (Setting the detection time to 0.0 disables the detection function.)

08-09 Feedback Signal Fault Treatment

Default: 0

Settings 0: Warn and continue operation

1: Fault and ramp to stop

2: Fault and coast to stop

3: Warn and operate at last frequency

- Valid only when the feedback signal is ACI (4–20 mA).
- Sets the treatments when the PID feedback signal is abnormal.

08-10 Sleep Level

Default: 0.00

Settings 0.00–599.00 Hz / 0.00–200.00%

08-11 Wake-up Level

Default: 0.00

Settings 0.00–599.00 Hz / 0.00–200.00%

- Pr.08-10 determines the sleep level, and if the sleep time and the wake-up level are enabled or disabled. Pr.08-10 = 0: Disabled; Pr.08-10 ≠ 0: Enabled.
- When Pr.08-18 = 0, the unit for Pr.08-10 and that for Pr.08-11 switch to frequency. The settings are become 0.00–599.00 Hz.
- When Pr.08-18 = 1, the unit for Pr.08-10 and that for Pr.08-11 switch to percentage. The settings are between 0.00–200.00%.
- The percentage is based on the current command value, not the maximum value. For example, if the maximum value is 100 kg, and the current command value is 30 kg, then if Pr.08-11 = 40%, the value is 12 kg.

08-12 Sleep Delay Time

Default: 0.0

Settings 0.0–6000.0 sec.

- When the frequency command is smaller than the sleep frequency and less than the sleep time, the frequency command is equal to the sleep frequency. However, the frequency command remains at 0.00 Hz until the frequency command becomes equal to or larger than the wake-up frequency.

08-13 PID Feedback Signal Error Deviation Level

Default: 10.0

Settings 1.0–50.0%

08-14 PID Feedback Signal Error Deviation Detection Time

Default: 5.0

Settings 0.1–300.0 sec.

- When the PID control function is normal, it should calculate the value within a period of time that is close to the target value.
- Refer to the PID control diagram for details. When executing PID feedback control, if |PID reference target value – detection value| > Pr.08-13 PID Feedback Signal Error Deviation Level and exceeds Pr.08-14 setting, it is regarded as a PID control fault, and the multi-function output terminal setting 15 (PID feedback error) activates.

08-16 PID Compensation Selection

Default: 0

Settings 0: Parameter setting (Pr.08-17)
1: Analog input

- 0: The setting for Pr.08-17 gives the PID compensation value.
- 1: Set the analog input (Pr.03-00–03-02) to 13, then the PID compensation value of analog input is displayed on Pr.08-17. At this time, Pr.08-17 is read only).

08-17 PID Compensation

Default: 0.0

Settings -100.0–100.0%

- The PID compensation value = maximum PID target value × Pr.08-17. For example, if the maximum operation frequency Pr.01-00 = 60.00 Hz, Pr.08-17 = 10.0%, the PID compensation value increases the output frequency 6.00Hz. 60.00Hz × 100.00% × 10.0% = 6.00Hz

08-18 Sleep Mode Function Setting

Default: 0

Settings 0: Refer to PID output command
1: Refer to PID feedback signal

- 0: The unit for Pr.08-10 and that for Pr.08-11 switch to frequency. The settings are between 0.00–599.00 Hz.
- 1: The unit for Pr.08-10 and that for Pr.08-11 switch to percentage. The settings are between 0.00–200.00%.

08-19 Wake-up Integral Limit

Default: 50.0

Settings 0.0–200.0%

- The wake-up integral limit for the drive prevents suddenly running at high speed when the drive wakes up. Defines the wake-up integral frequency limit = (Pr.01-00 × Pr.08-19%)
- Reduces the reaction time from sleep to wake-up.

08-21 Enable PID to Change the Operation Direction

Default: 0

Settings 0: Operation direction cannot be changed
1: Operation direction can be changed

08-22 Wake-up Delay Time

Default: 0.00

Settings 0.00–600.00 sec.

- Refer to Pr.08-18 for more information.

08-23 PID Control Flag

Default: 0000h

Settings bit0 = 1, PID running in reverse follows the setting for Pr.00-23
bit0 = 0, PID running in reverse follows PID's calculated value
bit1 = 1, two decimal places for PID Kp
bit1 = 0, one decimal place for PID Kp

- bit0 = 1: PID running in reverse function is valid only when Pr.08-21 = 1.
- bit0 = 0, if the PID calculated value is positive, the direction is forward. If the PID calculated value is negative, the direction is reverse.

08-26 PID Output Command Limit (Reverse Limit)

Default: 100.0

Settings 0.0–100.0%

- When PID enables the reverse direction, the PID output amount is a negative value, and the PID output value is limited by the setting for Pr.08-26. Use this function with Pr.08-21.

08-66 PID Target Value Setting

Default: 50.00

Settings -100.00–100.00%

- When Pr.00-20 = 9 (PID controller) and the PID function is enabled, use Pr.08-66 to set the PID target value.

There are three scenarios for the sleep and wake-up frequency. Refer to explanations in the following pages:

1) Frequency Command (PID is not in use, Pr.08-00 = 0. Works only in VF mode)

When the output frequency ≤ the sleep frequency and the drive reaches the preset sleep time, then the drive is in sleep mode (0 Hz). When the frequency command reaches the wake-up frequency, the drive starts to count the wake-up delay time. When the drive reaches the wake-up delay time, it starts to catch up to reach the frequency command value by the acceleration time.

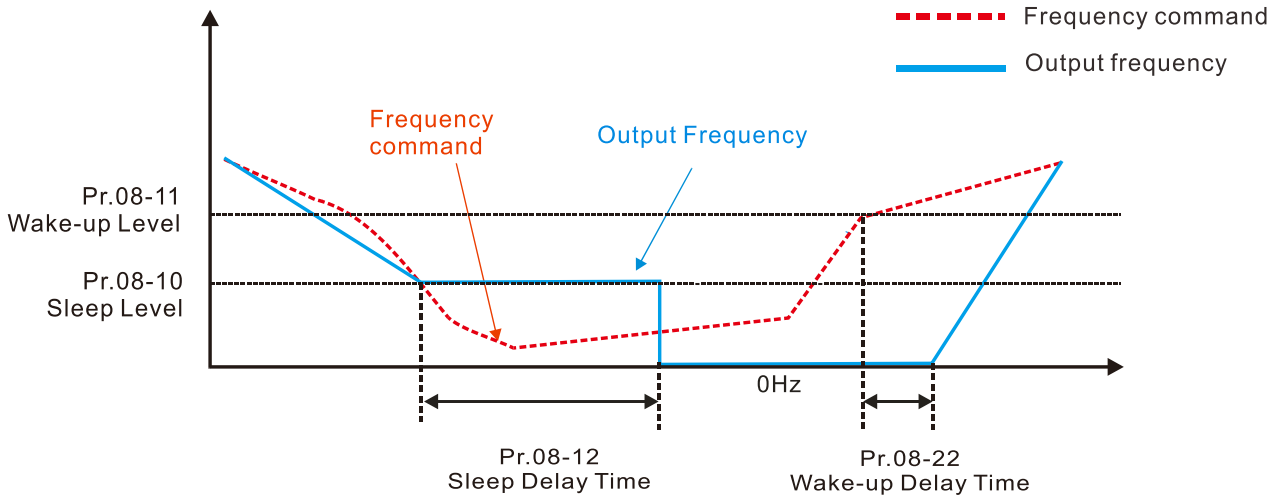

2) Internal PID Calculation Frequency Command (PID is in use, Pr.08-00 ≠ 0 and Pr.08-18 = 0.)

When the PID calculation Frequency command reaches the sleep frequency, the drive starts to count the sleep time and the output frequency starts to decrease. If the drive exceeds the preset sleep time, then the drive is in sleep mode (0Hz). If the drive does not reach the preset sleep time, it remains at the lower frequency limit (if there is a preset lower limit.), or it remains at the minimum output frequency set at Pr.01-07 and waits until it reaches the sleep time before it going into sleep mode (0Hz). When the PID calculated Frequency command reaches the wake-up frequency, the drive starts to count the wake-up delay time. Once it reaches the wake-up delay time, the drive starts to catch up to reach the PID Frequency command value by the acceleration time.

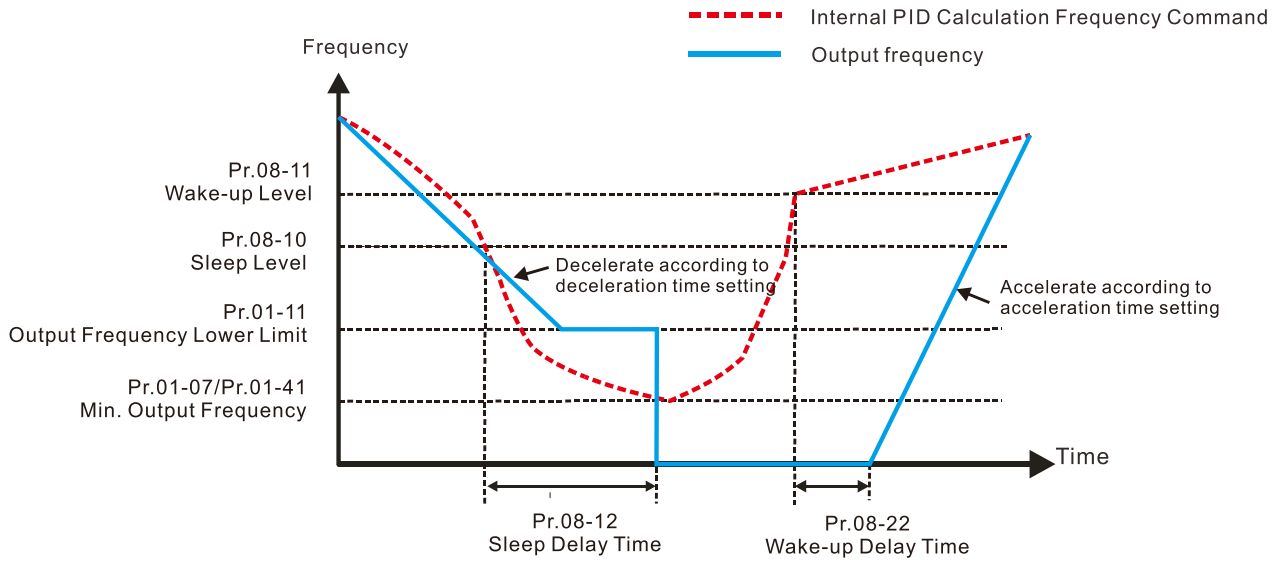

3) PID Feedback Value Rate Percentage (PID is in use, Pr.08-00 ≠ 0 and Pr.08-18 = 1)

When the PID feedback value reaches the sleep level percentage, the drive starts to count the sleep time and the output frequency starts to decrease. If the drive exceeds the preset sleep time, then the drive is in sleep mode (0 Hz). If the drive does not reach the preset sleep time, it remains at the lower frequency limit (if there is a preset of lower limit.), or it remains at the minimum output frequency set for Pr.01-07 and waits until it reaches the sleep time before going into sleep mode (0 Hz).

When the PID feedback value reaches the wake-up percentage, the drive starts to count the wake-up delay time. Once it reaches the wake-up delay time, the drive starts to catch up to reach the PID Frequency command value by the acceleration time.

Example 01: PID negative feedback

- Pr.08-10 must > Pr.08-11
- 30kg is the reference
- Set the parameter:
  Pr.03-00 = 5 (AVI is PID feedback)
  Pr.08-00 = 1 (PID negative feedback: AVI simulation input function select)
  Pr.08-10 = 40% (Sleep reference:
  12 kg = 40% × 30 kg)
  Pr.08-11 = 20% (Wake-up reference:
  6 kg = 20% × 30 kg)
  Case 01: If feedback >12 kg, frequency decreases.
  Case 02: If feedback <6 kg, frequency increases.

Area	PID Physical quantity
Sleep area	> 12 kg, the drive goes into sleep, the motor goes into sleep
Excessive area	between 6 kg and 12 kg, the drive remains in current state
Wake-up area	< 6 kg, the drive wakes-up, the motor wakes-up

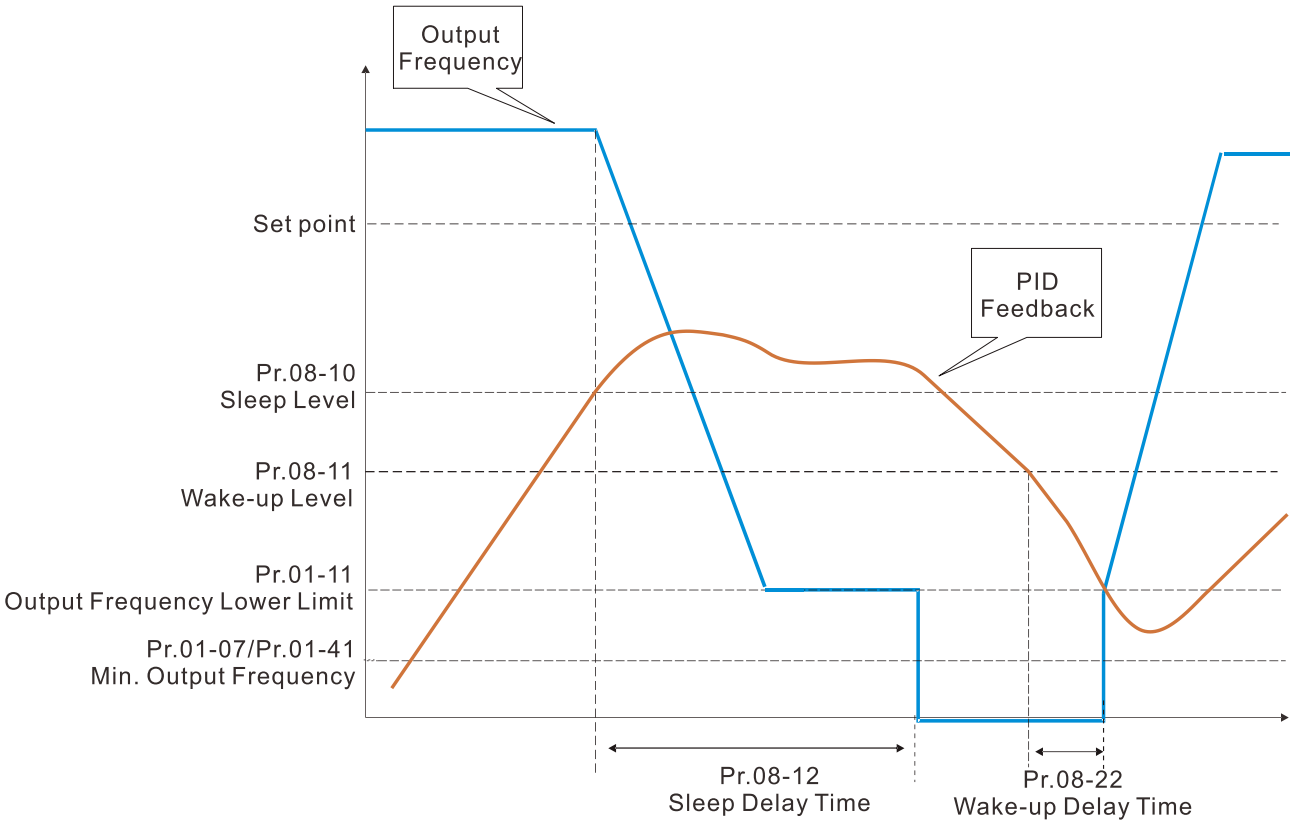

Example 02: PID positive feedback

- Pr.08-10 must < Pr.08-11
- 30kg is the reference
- Set the parameter:

  Pr.03-00 = 5 (AVI is PID feedback)

  Pr.08-00 = 4 (PID positive feedback: AVI simulation input function select)

  Pr.08-10 = 110% (Sleep reference: 33 kg = 110% × 30 kg)

  Pr.08-11 = 120% (Wake-up reference: 36 kg = 120% × 30 kg)

  Case 01: If feedback < 33 kg, frequency decreases.

  Case 02: If feedback > 36 kg, frequency increases.

Area	PID Physical quantity
Sleep area	> 36 kg, the drive goes into sleep, the motor goes into sleep
Excessive area	between 33 kg and 36 kg, the drive remains in the current state
Wake-up area	< 33 kg, the drive wakes-up

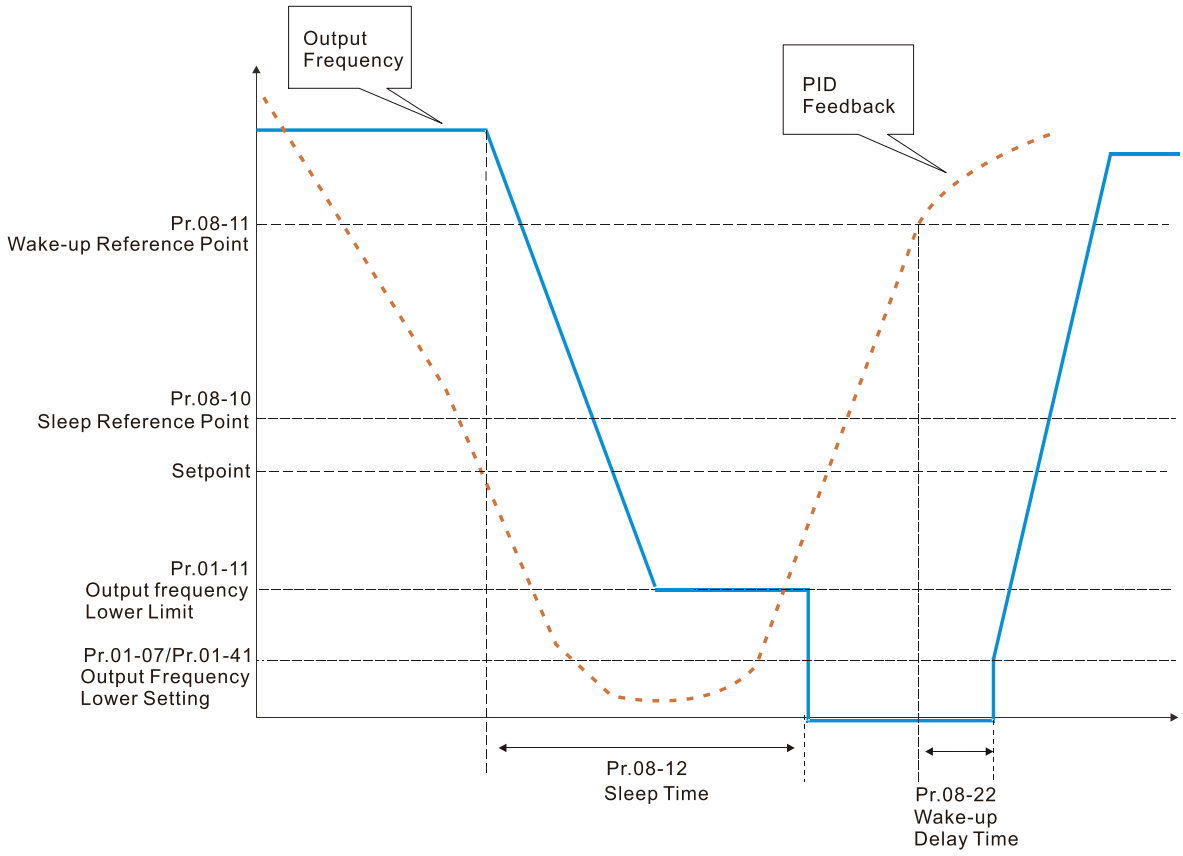

[This page intentionally left blank]

09 Communication Parameters

When using the communication interface, the diagram on the right shows the communication port pin definitions. We recommend that you connect the AC motor drive to your PC by using Delta IFD6530 or IFD6500 as a communication converter.
Refer to Appendix A. Modbus Protocol for detailed information.

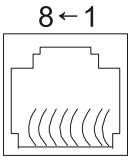

Modbus RS-485
Pin 1, 2, 6: Reserved
Pin 3, 7: SGND
Pin 4: SG-
Pin 5: SG+
Pin 8: +10VS

You can set this parameter during the operation.

09-00 Communication Address

Default: 1

Settings 1–254

Sets the communication address for the drive if the AC motor drive is controlled through RS-485 serial communication. The communication address for each AC motor drive must be unique.

09-01 COM1 Transmission Speed

Default: 9.6

Settings 4.8–115.2 Kbps

Sets the transmission speed between the computer and the AC motor drive.

Options are 4.8 Kbps, 9.6 Kbps, 19.2 Kbps, 38.4 Kbps, 57.6 Kbps, or 115.2 Kbps; otherwise, the transmission speed is set to the default 9.6 Kbps.

09-02 COM1 Transmission Fault Treatment

Default: 3

Settings 0: Warn and continue operation
1: Fault and ramp to stop
2: Fault and coast to stop
3: No warning, no fault and continue operation

Determines the treatment when an error is detected that the host controller does not continuously transmit data to the AC motor drive during Modbus communication. The detection time is based on the Pr.09-03 setting.

09-03 COM1 Time-out Detection

Default: 0.0

Settings 0.0–100.0 sec.

Sets the communication time-out value.

09-04 COM1 Communication Protocol

Default: 1

Settings 1: 7, N, 2 (ASCII)
2: 7, E, 1 (ASCII)
3: 7, O, 1 (ASCII)
4: 7, E, 2 (ASCII)

5: 7, O, 2 (ASCII)
6: 8, N, 1 (ASCII)
7: 8, N, 2 (ASCII)
8: 8, E, 1 (ASCII)
9: 8, O, 1 (ASCII)
10: 8, E, 2 (ASCII)
11: 8, O, 2 (ASCII)
12: 8, N, 1 (RTU)
13: 8, N, 2 (RTU)
14: 8, E, 1 (RTU)
15: 8, O, 1 (RTU)
16: 8, E, 2 (RTU)
17: 8, O, 2 (RTU)

- Control by PC (Computer Link)
- When using the RS-485 serial communication interface, you must specify each drive's communication address in Pr.09-00. The computer then implements control using the drives' individual addresses.
- Modbus ASCII (American Standard Code for Information Interchange): Each byte of data is the combination of two ASCII characters. For example, one byte of data: 64 Hex, shown as '64' in ASCII, consists of '6' (36Hex) and '4' (34Hex).

09-09 Communication Response Delay Time

Default: 2.0

Settings 0.0–200.0 ms

- If the host controller does not finish the transmitting / receiving process, you can use this parameter to set the response delay time after the AC motor drive receives communication command as shown in the following picture.

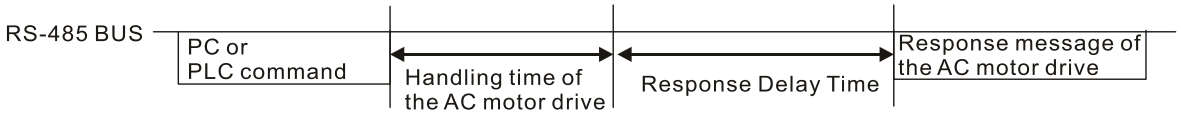

09-10 Communication Main Frequency

Default: 60.00

Settings 0.00–599.00 Hz

- When you set Pr.00-20 to 1 (RS-485 serial communication input), the AC motor drive saves the last Frequency command into Pr.09-10 when there is abnormal power off or momentary power loss. When power is restored, the AC motor drive operates with the frequency in Pr.09-10 if no new Frequency command input. When a Frequency command of RS-485 changes (the frequency command source must be set as Modbus), this parameter also changes.

09-11 Block Transfer 1

09-12 Block Transfer 2

09-13 Block Transfer 3

09-14	Block Transfer 4
09-15	Block Transfer 5
09-16	Block Transfer 6
09-17	Block Transfer 7
09-18	Block Transfer 8
09-19	Block Transfer 9
09-20	Block Transfer 10
09-21	Block Transfer 11
09-22	Block Transfer 12
09-23	Block Transfer 13
09-24	Block Transfer 14
09-25	Block Transfer 15
09-26	Block Transfer 16

Default: 0000h

Settings 0000–FFFFh

- There is a group of block transfer parameters available in the AC motor drive (Pr.09-11–Pr.09-26). Using communication code 03H, you can store the parameters (Pr.09-11–Pr.09-26) that you want to read.
- For example: according to the Address List (as shown in the table below), Pr.01-42 is shown as 012A. Set Pr.09-11 to 012Ah (the minimum voltage of Pr.01-42 M2 is 2.0 V), and use Pr.09-11 (communication address 090B) to read the communication parameter, the read value is 2.0.

AC motor drive parameters	GGnnH	GG is the parameter group, nn is the parameter number; for example, the address of Pr.04-10 is 040AH.

- Mind if the block transfer parameters are read only. If the data is written to read-only parameters from the upper unit, a communication error may occur.

09-29 D2D Communication Format

Default: 0

Settings 0: High-speed mode
1: COM1 communication format

- When D2D communication format is defined as COM1 communication format (Pr.09-29 = 1), the communication speed refers to Pr.09-01 and the communication format refers to Pr.09-04.

09-30 Communication Decoding Method

Default: 1

Settings 0: Decoding Method 1 (20xx)
1: Decoding Method 2 (60xx)

- The EtherCAT communication card only supports Decoding Method 2 (60xx).

		Decoding Method 1	Decoding Method 2
Source of Operation Control	Digital Keypad	Digital keypad controls the drive action regardless of decoding method 1 or 2.	
	External Terminal	External terminal controls the drive action regardless of decoding method 1 or 2.	
	RS-485	Refer to address: 2000h–20FFh	

		Decoding Method 1	Decoding Method 2
	CANopen	Refer to index: 2020-01h–2020-FFh	Refer to index:2060-01h–2060-FFh
	Communication Card	Refer to address: 2000h–20FFh	Refer to address: 6000h–60FFh
	PLC	PLC command controls the drive action regardless of decoding method 1 or 2.	

09-31 Internal Communication Protocol

Default: 0

Settings 0: Modbus 485
-1: Internal Communication Slave 1
-2: Internal Communication Slave 2
-3: Internal Communication Slave 3
-4: Internal Communication Slave 4
-5: Internal Communication Slave 5
-6: Internal Communication Slave 6
-7: Internal Communication Slave 7
-8: Internal Communication Slave 8
-10: Internal Communication Master
-12: Internal PLC Control
-20: D2D Master
-21: D2D Slave 1
-22: D2D Slave 2
-23: D2D Slave 3
-24: D2D Slave 4
-25: D2D Slave 5
-26: D2D Slave 6
-27: D2D Slave 7
-28: D2D Slave 8

- When it is defined as internal communication, refer to Section 16-10 for Main Control Terminal of Internal Communication.
- When it is defined as internal PLC control, refer to Section 16-12 for Remote IO control application (using MODRW).
- When Pr.09-31 is defined as D2D communication protocol, refer to the following description for D2D communication.
  [D2D communication]
  D2D is the abbreviation for Driver To Driver, which is the industrial commnucation module for the communication between drives. It uses Master-Slave as the communication structure and RS-485 transmission as the hardware layer connection. The module allows the Master to communicate with the Slave when the internal PLC of the drive is not enabled, the communication speed rate can reach up to 9 Kbit/s and supports Slave 1–8.
- The D2D communication is synchronous communication, the synchronization period is determined by the number of the Salve stations defined by the user. For example, if the number

of Slave station is 1, the synchronization period is 1 ms; if the number of Slave stations is 3, the synchronization period is 2 ms, as shown in Table 1.

Number of Slave (station)	1	2	3	4	5	6	7	8
Synchronization Period (ms)	1	2	2	2	3	3	4	4

Table 1: Definition of D2D Synchronization Period

09-32 Number of D2D Communication Slave

Default: 0

Settings 0–8

Defines the number of D2D communication slave stations.

09-33 PLC Command Force to 0

Default: 0

Setting bit0: Before PLC scans, set the PLC target frequency = 0
bit1: Before PLC scans, set the PLC target torque = 0
bit2: Before PLC scans, set the speed limit of torque control mode = 0

Defines whether the Frequency command or the Speed command must be cleared to zero or not before the PLC starts the next scan.

09-35 PLC Address

Default: 2

Settings 1–254

09-36 CANopen Slave Address

Default: 0

Settings 0: Disable
1–127

09-37 CANopen Speed

Default: 0

Settings 0: 1 Mbps
1: 500 Kbps
2: 250 Kbps
3: 125 Kbps
4: 100 Kbps (Delta only)
5: 50 Kbps

09-39 CANopen Warning Record

Default: Read only

Settings bit0: CANopen Guarding Time-out
bit1: CANopen Heartbeat Time-out
bit2: CANopen SYNC Time-out
bit3: CANopen SDO Time-out
bit4: CANopen SDO buffer overflow
bit5: CANopen hardware disconnection warning (Can Bus OFF)
bit6: Error protocol of CANopen
bit8: The setting values of CANopen indexes are fail
bit9: The setting value of CANopen address is fail
bit10: The checksum value of CANopen indexes is fail

09-40 CANopen Decoding Method

Default: 1

Settings 0: Disable (Delta-defined decoding method)
1: Enable (CANopen DS402 Standard protocol)

09-41 CANopen Communication Status

Default: 0

Settings 0: Node Reset State
1: Com Reset State
2: Boot up State
3: Pre-operation State
4: Operation State
5: Stop State

09-42 CANopen Control Status

Default: Read Only

Settings 0: Not ready for use state
1: Inhibit start state
2: Ready to switch on state
3: Switched on state
4: Enable operation state
7: Quick stop active state
13: Error reaction activation state
14: Error state

09-45 CANopen Master Function

Default: 0

Settings 0: Disable
1: Enable

09-46 CANopen Master Address

Default: 100

Settings 0–127

09-49 CANopen Extension Setting

Default: 0002h

Settings bit0: Index 604F and 6050 update to the 1st acceleration / deceleration time or not.
bit0 = 0: update to the 1st acceleration / deceleration time (default)
bit0 = 1: do not update
bit1: The verification of CANopen identification code is distinguished by power module or drive series.
bit1 = 0: distinguished by power module
bit1 = 1: distinguished by drive series

📖 bit0 = 0, control the first acceleration time (Pr.01-12) and the first deceleration time (Pr.01-13) directly via CANopen.

📖 Each series of the drive and each power module of drive have its own EDS file and this is more cumbersome and unmanageable. Therefore, using 09-49 bit1 = 1 CANopen identification code verification distinguished by drive series and which means the CH2000 series requires only 1 EDS file.

09-60 Communication Card Identification

Default: Read only

Settings 0: No communication card
1: DeviceNet Slave
2: Profibus-DP Slave
3: CANopen Slave / Master
5: EtherNet / IP Slave
6: EtherCAT
12: PROFINET

09-61 Firmware Version of Communication Card

Default: Read only

Settings Read only

09-62 Product Code

Default: Read only

Settings Read only

09-63 Error Code

Default: Read only

Settings Read only

09-70 Communication Card Address (for DeviceNet and PROFIBUS)

Default: 1

Settings DeviceNet: 0–63
Profibus-DP: 1–125

09-71 Communication Card Speed Setting (for DeviceNet)

Default: 2

Settings Standard DeviceNet:

0: 125 Kbps

1: 250 Kbps

2: 500 Kbps

3: 1 Mbps (Delta only)

Non-standard DeviceNet: (Delta only)

0: 10 Kbps

1: 20 Kbps

2: 50 Kbps

3: 100 Kbps

4: 125 Kbps

5: 250 Kbps

6: 500 Kbps

7: 800 Kbps

8: 1 Mbps

09-72 Additional Settings for Communication Card Speed (for DeviceNet)

Default: 0

Settings 0: Standard DeviceNet

In this mode, the baud rate can only be 125 Kbps, 250 Kbps, and 500 Kbps in standard DeviceNet speed.

1: Non-standard DeviceNet

In this mode, the DeviceNet baud rate can be same as that for CANopen (0–8).

- Use this parameter with Pr.09-71.
- 0: The baud rate can only be set to 125 Kbps, 250 Kbps and 500 Kbps as a standard DeviceNet speed.
- 1: The DeviceNet communication rate can be the same as that for CANopen (setting 0–8).

09-74 Communication Card Control Flag

Default: 0

Settings bit0: set the EDS identity definition of EIP card

bit0 = 0: identify EIP card by the drive's family (EDS, old)

bit0 = 1: identify EIP card by the drive's series (EDS, new)

- This parameter defines the EDS identification method of EIP cards. The definition is as follows:
  bit0: EDS identity definition of EIP card
  bit0 = 0: Identify EIP card by the drive's family, for example, M300 family and C2000 family.
  bit0 = 1: Identify EIP card by the drive's series, for example, C2000, CH2000, C2000-HS, CP2000…etc.

09-75 Communication Card IP Configuration (for EtherNet)

Default: 0

Settings 0: Static IP
1: Dynamic IP (DHCP)

0: Set the IP address manually.

1: IP address is dynamically set by the host controller.

09-76 Communication Card IP Address 1 (for EtherNet)
09-77 Communication Card IP Address 2 (for EtherNet)
09-78 Communication Card IP Address 3 (for EtherNet)
09-79 Communication Card IP Address 4 (for EtherNet)

Default: 0

Settings 0–65535

Use Pr.09-76–09-79 with a communication card.

09-80 Communication Card Address Mask 1 (for EtherNet)
09-81 Communication Card Address Mask 2 (for EtherNet)
09-82 Communication Card Address Mask 3 (for EtherNet)
09-83 Communication Card Address Mask 4 (for EtherNet)

Default: 0

Settings 0–65535

09-84 Communication Card Gateway Address 1 (for EtherNet)
09-85 Communication Card Gateway Address 2 (for EtherNet)
09-86 Communication Card Gateway Address 3 (for EtherNet)
09-87 Communication Card Gateway Address 4 (for EtherNet)

Default: 0

Settings 0–65535

09-88 Communication Card Password (Low word) (for EtherNet)
09-89 Communication Card Password (High word) (for EtherNet)

Default: 0

Settings 0–99

09-90 Reset Communication Card (for EtherNet)

Default: 0

Settings 0: Disable
1: Reset to defaults

09-91 Additional Settings for the Communication Card (for EtherNet)

Default: 1

Settings bit0: Enable IP Filter

bit1: Enable internet parameters (1bit)

When the IP address is set, this bit is enabled. After updating the parameters for the communication card, this bit changes to disabled.

bit2: Enable login password (1bit)

When you enter the login password, this bit is enabled. After updating the communication card parameters, this bit changes to disable.

09-92 Communication Card Status (for EtherNet)

Default: 0

Settings bit0: Enable password

When the communication card is set with a password, this bit is enabled. When the password is cleared, this bit is disabled.

10 Speed Feedback Control Parameters

In this parameter group, ASR is the abbreviation for Adjust Speed Regulator and PG is the abbreviation for Pulse Generator.

You can set this parameter during operation.

10-00 Encoder Type Selection

Default: 0

Settings
0: Disabled
1: ABZ
2: ABZ (Delta encoder for Delta permanent magnet synchronous AC motor)
3: Resolver
4: ABZ / UVW
5: MI8 single-phase pulse input
6: Sin / Cos absolute (A / B, C / D, R)
7: Sin / Cos incremental (A / B, R)
8: Tamagawa communication type absolute encoders

- When using PG extension card EMC-PG01L or EMC-PG01O, set Pr.10-00 = 1. These expansion cards are applicable for induction motor (IM) and permanent magnetic motor (PM). When you use the PG extension card for a PM, you need to do dynamic test for PM magnetic pole (Pr.05-00 = 4) along with PM initial rotor position detection function (Pr.10-53 = 1 / 2 / 3).
- When using EMC-PG01U, set Pr.10-00 = 2 (Delta encoder), and make sure SW1 is switched to D (Delta type). If the setting for Pr.10-00, Pr.10-01 and Pr.10-02 has changed, turn off the drive's power and reboot to prevent permanent magnetic motor (PM) stall. This mode is recommended to use for PM.
- When using EMC-PG01U, set Pr.10-00 = 4 (Standard ABZ/UVW Encoder), and make sure SW1 is switched to S (Standard Type). This mode is applicable for both IM and PM.
- When using EMC-PG01R, set Pr.10-00 = 3, and set Pr.10-01 to 1024 ppr, then set Pr.10-30 after verifying the pole numbers of the resolver.
- When using EMC-PG01H, set Pr.10-00 = 6 or 7, the encoder input type setting (Pr.10-02) can only be 1 or 2. This mode is applicable for both IM and PM.
- When using MI8 single-phase pulse input as frequency command, the Pr.10-02 must set to "5: Single-phase input". The drive calculates the MI8 single-phase pulse input speed when the control modes are VF, VFPG, SVC, IM/PM FOC Sensorless and IM/PM TQC Sensorless. If you use the MI8 single-phase pulse input for speed feedback in closed-loop control, you can only use it in VFPG closed-loop control mode.
- When Pr.10-00 = 6 or 7, the encoder input type setting (Pr.10-02) can only be1 or 2.
- When Pr.10-00 = 8:
  1. Pr.10-01 (Encoder pulses per revolution) is automatically set to default value 32768, this default value is only applicable for 17bit encoder.
  2. Pr.10-01 can only support setting 1.
  3. Pr.11-62 (Encoder at load side ppr number (high byte)) is automatically set to 2.

- When Pr.10-00 = 8, PG card detects the number of rotation laps. If the application is Rotation axis (Pr.10-60 bit 4–7, coordinate system type = 1 (Rotation axis 1) or 2 (Rotation axis 2)), the maximum rotation number of the encoder and the overflow signal EcOF display. Therefore, for this application, it is recommended to set Pr.10-60 bit8–11 (Encoder overflow treatment) to 2: No warn and continue to operate.

10-01 Encoder Pulses per Revolution

Default: 600

Settings 1–20000

- This parameter sets the encoder pulses per revolution (ppr). It is a feedback control signal source when using PG. The encoder sets the number of pulses for the motor rotating through one rotation. The A/B phase cycle generates the pulse number.
- This setting is also the encoder resolution. The speed control is more accurate with higher resolution.
- If you set this parameter incorrectly, it may cause motor stall, drive over-current, or a permanent magnetic pole origin detection error for the PM in closed-loop control. When using the PM, you must perform the magnetic pole origin detection (Pr.05-00 = 4) again if you modify the content of this parameter.
- The hardware bandwidth of EMC-PG01L and EMC-PG01O is 300 kHz. Take a two-pole pairs IM as example, if you choose a 1024 ppr encoder, the maximum operation frequency for closed-loop control is 300k ÷ 1024 × 2 poles pairs = 586 kHz; in other words, one-pole pairs motor can only work under 293 Hz and below. To work with higher frequency, you need to choose an encoder with lower distinguishability or enable Pr.11-00 bit11 = 1 (Switch between IMFOCPG and IMVF modes).
- In V/F mode, if you set the parameters for number of poles, encoder and mechanical gear ratio correctly, and set Pr.00-04 = 7, the keypad displays the motor speed (including direction) that detected by the encoder, which could be the inspection method when an error occurs to the FOCPG operation.
- When Pr.10-00 = 8, it only supports encoders with resolution that is smaller than 17bit. The default for Pr.10-01 is 32768, which is only applicable for encoders with 17bit resolution. If the encoder resolution is not 17bit, set Pr.10-01 to encoder resolution divided by 4.
  For example:
  Encoder resolution = 16 bit, then 2^{16} = 65536, 65536 ÷ 4 = 16384. Set Pr.10-01 = 16384.

10-02 Encoder Input Type Setting

Default: 0

Settings 0: Disable

1: A / B phase pulse input, run forward if the A-phase leads the B-phase by 90 degrees.

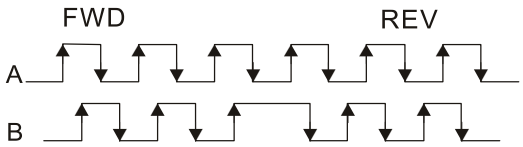

2: A / B phase pulse input, run forward if the B-phase leads the A-phase by 90 degrees.

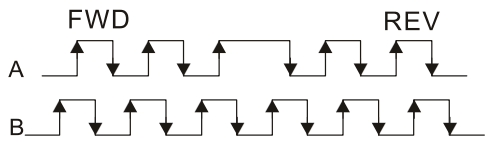

3: A-phase is a pulse input and B-phase is a direction input (L = reverse direction, H = forward direction).

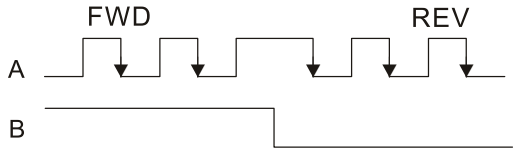

4: A-phase is a pulse input and B-phase is a direction input (L = forward direction, H = reverse direction).

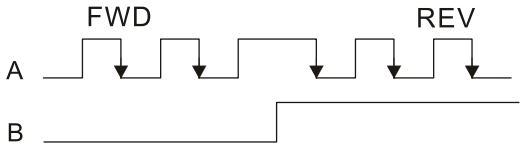

5: Single-phase input

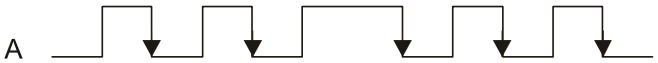

Position control: the PG2 pulse affects the PG1 pulse tracking position.

1. When PG2 is single-pulse, and PG1 is A / B phase pulse, the frequency of position control should be (input pps × 2) ÷ (PG1 ppr × 4) at constant speed.
2. When PG2 and PG1 are either single-pulse (or both A / B phase pulse), the frequency of position control should be (input pps × 2) ÷ (PG1 ppr × 2) at constant speed.
3. Due to the edge trigger of the pulse input, the input of A / B phase pulse should be read as 4 times of the frequency; and the single-phase input should be read as twice of the frequency. For inputs with the same pps, the single-phase tracking frequency will be half of the double-phase frequency.

Velocity control: PG2 acts according to the setting for Pr.10-01 (PG1 ppr), and will not be affected by PG1 pulse (single-phase input or A / B phase pulse). When the setting for Pr.10-00, Pr.10-01 and Pr.10-02 are changed, cycle the power of the motor drive.

1. The speed formula is (input ppr) ÷ (PG1 ppr), when PG1 ppr = 2500, PG2 is single-phase input, and the input pps is 1000 (1000 pulse per second), the speed should be (1000 ÷ 2500) = 0.40 Hz.
2. The same pps inputs of A/B phase pulse or single-phase pulse input should get the same frequency command.

10-03 Frequency Division Output Setting (Denominator)

Default: 1

Settings 1–255

Sets the denominator for the frequency division of the PG card feedback and output. When you

set it to 2 with feedback 1024 ppr, PG OUT (pulse output) of PG card is 1024 ÷ 2 = 512 ppr.

✓	**10-04**	Mechanical Gear at Load Side A1
✓	**10-05**	Mechanical Gear at Motor Side B1
✓	**10-06**	Mechanical Gear at Load Side A2
✓	**10-07**	Mechanical Gear at Motor Side B2

Default: 100

Settings 1–65535

Use Pr.10-04–Pr.10-07 with the multi-function input terminal setting 48 to switch to Pr.10-04–Pr.10-05 or Pr.10-06–Pr.10-07, as shown in the diagram below.

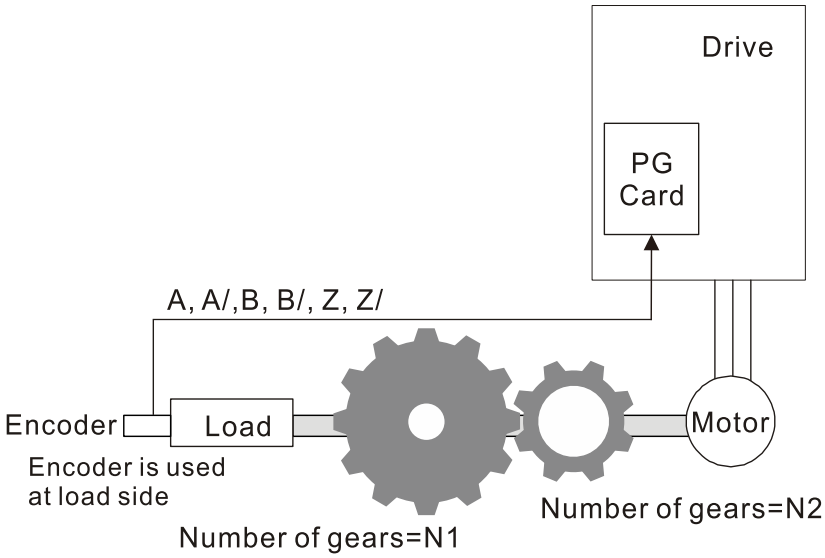

Gear ratio: $\frac{N1}{N2} = \frac{A1}{B1}$ or $\frac{A2}{B2}$ MIx=48 ON= $\frac{A2}{B2}$ OFF= $\frac{A1}{B1}$

A1 = Mechanical Gear A1 at Load Side (Pr.10-04)

B1 = Mechanical Gear B1 at Motor Side (Pr.10-05)

A2 = Mechanical Gear A2 at Load Side (Pr.10-06)

B2 = Mechanical Gear B2 at Motor Side (Pr.10-07)

When using the single-point positioning function, consider the mechanical gear ratio and encoder installation positions (use semi-closed loop control method when the encoder is installed at the motor side or load side; use fully-closed loop control method when the encoder is installed at the motor side and the Z-phase signal comes from the load side)

1. **Semi-closed loop control method: Type A** (Encoder is installed at the motor side)
   Since the encoder is installed at the motor side, the drive can only realize the motor placement, not the actual load placement. In this case, motor placement is regarded as load placement. Thus, the mechanical gear ratio is 1:1

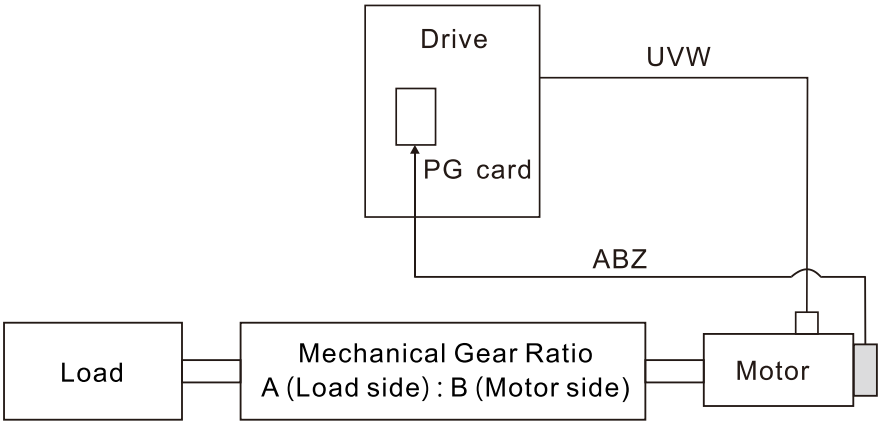

2. **Semi-closed loop control method: Type B** (Encoder is installed at the load side)
   Since the encoder is installed at the load side, the drive can only realize the actual load position movement, not the motor position movement. In this case, you must set the mechanical gear ratio to convert the load position movement to motor position movement

📖 A mechanical gear ratio error may occur if you use this control method. It is not recommended to use this method because it has a poorer performance in motor driving.

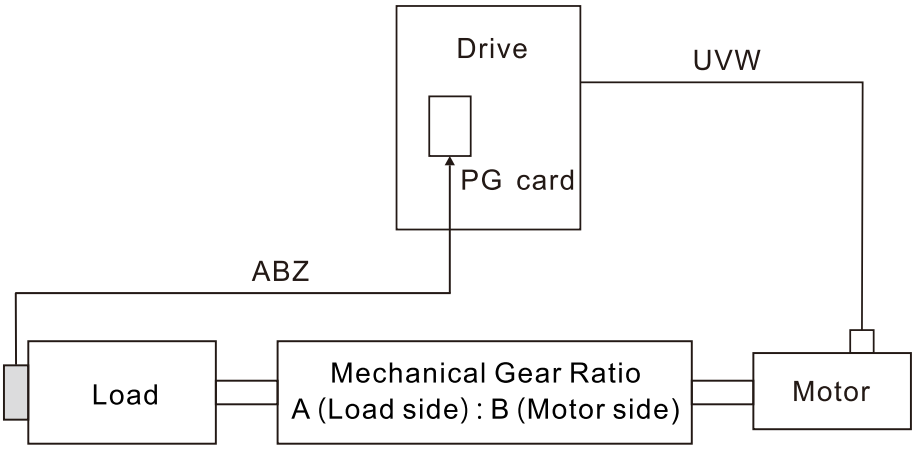

3. **Fully-closed loop control method: Type A** (Encoder is installed at the motor side, and Z-phase signal comes from the load side)
   The encoder is installed at the motor side, and the Z-phase signal comes from the load side, so the drive can realize both the motor position movement and actual load position movement. However, because there is only Z-phase signal for the actual position movement, set Pr.11-62 / Pr.11-63 (PPR Number at Load Side High / Low Byte).

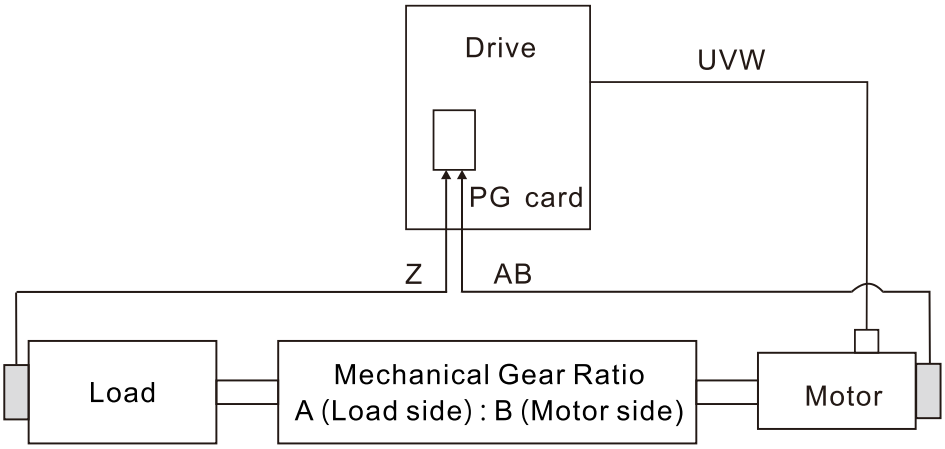

📖 Example 1:
When the encoder is installed at the load side, Pr.10-04 = 204 (Mechanical Gear A1 at Load Side), and Pr.10-05 = 34 (Mechanical Gear B1 at Motor Side), then the mechanical gear ratio is A1:B1 = 204:34 = 6:1. In this case, set the frequency command = 2 Hz, then motor's actual frequency is 12 Hz, and the frequency at the load side is 2 Hz.

📖 Example 2:
Set the encoder PPR = 1024, Pr.10-04 = 20, and Pr.10-05 = 40. The motor's one revolution is equal to the load's two revolutions after setting the mechanical gear ratio (frequency at the motor side = 20 Hz; frequency at the load side = 400 Hz).
In this case, if the required speed at the load side is 12000 rpm, and speed at the motor side should be 6000 rpm, then the pulse-train command given by the controller is 102400 pulse/sec. [= (1024 × 6000) ÷ 60 = 102400].

📖 If you set the mechanical gear ratio incorrectly, overshot may occur.

📖 This function is only valid for single-point positioning.

10-08 Treatment for Encoder / Speed Observer Feedback Fault

Default: 2

Settings	0: Warn and continue operation
	1: Fault and ramp to stop
	2: Fault and coast to stop

10-09 Detection Time of Encoder / Speed Observer Feedback Fault

Default: 1.0

Settings	0.0–10.0 sec.
	0: Disable

📖 When there is an encoder loss, an encoder signal error, a pulse signal setting error or a signal error, if the duration exceeds the detection time for the encoder feedback fault (Pr.10-09), the

encoder signal error occurs. Refer to Pr.10-08 for encoder feedback fault treatment.

When the speed controller signal is abnormal or the direction of operation and speed observer are different, if time exceeds the detection time for the encoder feedback fault (Pr.10-09), reverse direction of the speed feedback fault (SdRv, fault no. 68) occurs. Refer to chapter 14 for the troubleshooting.

10-10 Encoder / Speed Observer Stall Level

Default: 115

Settings 0–120%
0: Disable

Determines the maximum encoder feedback signal allowed before a fault occurs. The maximum operation frequency for Pr.01-00 = 100%

10-11 Detection Time of Encoder / Speed Observer Stall

Default: 0.1

Settings 0.0–2.0 sec.

10-12 Encoder / Speed Observer Stall Action

Default: 2

Settings 0: Warn and continue operation
1: Fault and ramp to stop
2: Fault and coast to stop

When the drive output frequency exceeds the encoder / speed observer stall level (Pr.10-10). and the error time exceeds the speed observer stall detection time (Pr.10-11), the over speed rotation feedback fault (SdOr, fault no. 69) occurs. Refer to chapter 14 for the troubleshooting.

10-13 Encoder / Speed Observer Slip Range

Default: 50

Settings 0–50%
0: Disable

10-14 Detection Time of Encoder/ Speed Observer Slip

Default: 0.5

Settings 0.0–10.0 sec.

10-15 Encoder / Speed Observer Stall and Slip Error Action

Default: 2

Settings 0: Warn and continue operation
1: Fault and ramp to stop
2: Fault and coast to stop

This parameter acts on the settings for Pr.10-13–Pr.10-15:

When the value of (rotation speed – motor frequency) exceeds the Pr.10-13 setting, and the detection time exceeds Pr.10-14; the drive starts to count the time. If the detection time exceeds Pr.10-14, the encoder feedback signal error occurs. Refer to Pr.10-15 for the encoder stall and slip error treatment.

10-16 Pulse Input Type Setting

Default: 0

Settings 0: Disable

1: A / B phase pulse input, run forward if A-phase leads B-phase by 90 degrees.

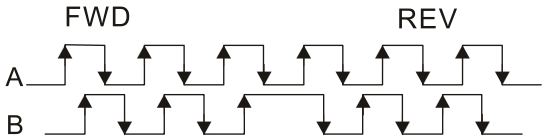

2: A / B phase pulse input, run forward if B-phase leads A-phase by 90 degrees.

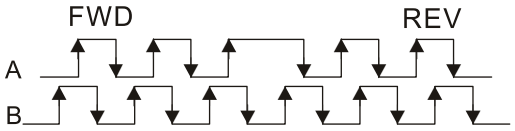

3: A-phase is a pulse input and B-phase is a direction input (L = reverse direction, H = forward direction).

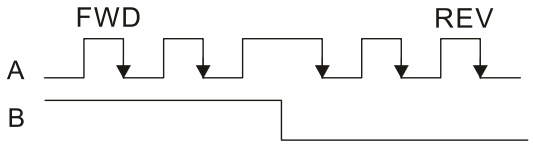

4: A-phase is a pulse input and B-phase is a direction input (L = forward direction, H = reverse direction).

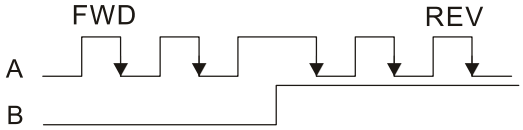

5: MI8 single-phase pulse input

- When this setting is different from the Pr.10-02 setting and the source of the frequency command is pulse input (Pr.00-20 set to 4 or 5), it causes a four-time frequency problem.
- Example1:
  Assume that Pr.10-01 = 1024, Pr.10-02 = 1, Pr.10-16 = 3, Pr.00-20 = 5, MIx = 37 and ON, then the pulse needed to rotate the motor one revolution is 4096 (1024 × 4).
- Example 2:
  Assume that Pr.10-01 = 1024, Pr.10-02 = 1, Pr.10-16 = 1, Pr.00-20 = 5, MIx = 37 and ON, the pulse needed to rotate the motor one revolution is 1024 (1024 × 1).
- Setting procedure of MI8 single-phase pulse input:
  Pr.00-20 = 4, Pulse input without direction command
  Pr.10-01 set as the ppr number of each rotation.
  Pr.10-16 = 5, MI8 single-phase pulse input
- MI8 input and PG2 input could both exist at the same time. But PG card Pr.10-00 and Pr.10-16 cannot be set as MI8 at the same time.

10-17 Electrical Gear A
10-18 Electrical Gear B

Default: 100

Settings 1–65535

The electrical gear ratio is a ratio of the controller to the drive for the motor PPR (Pulses Per Revolution). For example, if the motor PPR of the controller is 10000, and the motor PPR of the drive is 1024, then the electrical gear ratio for the PG card input is 1024/10000, and the electrical gear ratio for the PG card output is 10000/1024.

Rotation speed=pulse frequency/encoder pulses (Pr.10-01) × Electrical Gear A / Electrical Gear B

You can set the revolution easily using the electrical gear. When the encoder's resolution is 1024, it means that the motor PPR is 1024. If the electrical gear ratio is 1, the motor encoder PPR is 1024. If the electrical gear ratio is 0.5, the corresponding motor PPR is 1 for every two pulse-train commands.

If you set the electrical gear ratio incorrectly, overshot may occur.

Example:

- Turn the screw with one revolution = 51.2 mm,
- Set Pr.10-01 (Encoder PPR) = 1024,
- Set Pr.10-17 (Electrical gear A) = 1024,
- Set Pr.10-18 (Electrical gear B) = 500 (hand wheel specification = 500 PPR),
- Set Pr.10-04 (Mechanical Gear A1 at Load Side) = 20,
- Pr.10-05 (Mechanical Gear B1 at Motor Side) = 40.

Then, after setting the electrical gear ratio and mechanical gear ratio, hand wheel's one revolution is equal to the motor’s one revolution, and is equal to the load’s two revolutions.
In this case, 1 revolution at the load side = 51.2 mm = 1/2 revolution at the motor side = 512 [1024/2] pulses = 1/2 revolution of the hand wheel = 250 [500/2] pulses. Thus, it can be referred that 1 pulse command movement = 51.2 mm / 512 pulses = 0.1 mm/pulse or 1 mm movement for 10 pulses.
If the screw moves 1.024 meters, the required number of pulse-train commands are:
Load side: 1.024 meters = 102.4 cm = 1024 mm; 1024 mm ÷ 51.2 mm = 20 revolutions
20 revolutions at the load side = 10 revolutions at the motor side;
1024 pulses × 10 revolutions = 10240 pulses
As a result, the number of pulse-train commands provided by the controller is 10240 pulses or 10 revolutions for the hand wheel.

10-19 Encoder Single-turn Resolution

Default: 17

Settings 0–17 bit

This parameter is the supported bit of communication type encoder single-turn resolution.

10-20 Encoder Multi-turn Resolution

Default: 16

Settings 0–16 bit

This parameter is the supported bit of communication type encoder multi-turn resolution.

10-21 PG2 Pulse Input Speed Command Low Pass Filter Time

Default: 0.100

Settings 0.000–65.535 sec.

When you set Pr.00-20 to 5 and the multi-function input terminal to 37 (OFF), the system treats the pulse command as a Frequency command. Use this parameter to suppress the speed command jump.

10-23 PG Control Flag

Default: 1

Settings bit0: Enable battery power detection function
bit0 = 0: Disable
bit0 = 1: Enable

This parameter determines whether to enable the battery power detection function of communication type encoder, the definition is as below:
bit0 = 0: Disable the battery power detection function
bit0 = 1: Enable the battery power detection function

10-24 FOC & TQC Function Control

Default: 0

Settings bit0: ASR controller under torque control
(0: use PI as ASR; 1: use P as ASR)
bit11: Activates the DC brake when executing the zero torque command
(0: ON; 1: OFF)
bit12: FOC Sensorless mode with crossing zero means the speed goes from negative to positive or positive to negative
(0: determined by the stator frequency; 1: determined by the speed command)
bit15: Direction control in open-loop torque
(0: Switch ON direction control; 1: Switch OFF direction control)

Only bit = 0 is used for closed-loop; other bits are used for open-loop.

10-25 FOC Bandwidth for Speed Observer

Default: 40.0

Settings 20.0–100.0 Hz

Setting the speed observer to a higher bandwidth could shorten the speed response time but creates greater noise interference during the speed observation.

10-26 FOC Minimum Stator Frequency

Default: 2.0

Settings 0.0–10.0% fN

Sets the stator frequency lower limit in operation status. This setting ensures the stability and accuracy of observer and avoids interferences from voltage, current and motor parameters. fN is the motor rated frequency.

10-27 FOC Low Pass Filter Time Constant

Default: 50

Settings 1–1000 ms

Sets the low pass filter time constant of a flux observer at start-up. If you cannot activate the motor during high speed operation, lower the setting for this parameter.

10-28 FOC Gain of Excitation Current Rise Time

Default: 100

Settings 33–300%Tr (Tr: rotor time constant)

Sets the drive's excitation current rise time when it activates IM FOC / TQC sensorless speed tracking. When the drive's activation time is too long in torque mode, adjust this parameter to a shorter time value. Tr is the rotor time constant.

In IM VF / SVC control modes, the excitation current rise time of Pr.07-12 = 4 (Speed tracking by the motor vector flux) also refers to this parameter.

10-29 Upper Limit of Frequency Deviation

Default: 20.00

Settings 0.00–200.00 Hz

Limits the maximum frequency deviation.

If you set this parameter too high, an abnormal feedback malfunction occurs.

If the application needs a higher setting for Pr.10-29, note that a higher setting results in larger motor slip, which causes a PG Error (PGF3, PGF4). In this case, you can set Pr.10-10 and Pr.10-13 to 0 to disable PGF3 and PGF4 detection, but you must make sure the PG wiring and application are correct; otherwise, it may lose the instant PG protection. Pr.10-29 setting too high is not commonly done.

10-30 Resolver Pole Pair

Default: 1

Settings 1–50

To use the Pr.10-30 function, you must set Pr.10-00 = 3 (Resolver Encoder) first.

10-31 I/F Mode, Current Command

Default: 40

Settings 0–150% rated current of the motor

Sets the current command for the drive in low speed area (low speed area: frequency command < Pr.10-39). When the motor stalls on heavy-duty start-up or forward / reverse with load, increase the parameter value. If the inrush current is too high and causes oc stall, then decrease the parameter value.

When Pr.00-11 = 8 (SynRM sensorless), the setting value becomes 15%, and the application extends to high-speed and flux-weakening regions.

When Pr.00-11 = 8 (SynRM sensorless) and the motor drive operates in flux-weakening region, you can adjust the parameter if the rotation speed is restricted and cannot increase, causing the controller to lose control.

10-32 PM FOC Sensorless Speed Estimator Bandwidth (High Speed)

Default: 5.00

Settings 0.00–600.00 Hz

- Sets the speed estimator bandwidth. Adjust the parameter to change the stability and the accuracy of the motor speed.
- If there is low frequency vibration (the waveform is similar to sine wave) during the process, then increase the bandwidth. If there is high frequency vibration (the waveform shows extreme vibration and is like a spur), then decrease the bandwidth.

10-33 PM FOC Sensorless Speed Estimator Bandwidth (Low Speed)

Default: 1.00

Settings 0.00–600.00 Hz

- This parameter is only valid in SynRM sensorless (Pr.00-11 = 8) speed mode.
- Increase the setting value improves the loading performance during the start-up and low-speed operation.
- When the motor starts or the rotation speed is lower than I/F switching frequency point (Pr.10-39), you can adjust the parameter if the motor speed has oscillation.
- If Pr.05-33 = 3 (SynRM), then the unit becomes Pu, and the setting range becomes to 0.01–3.00, the default becomes to 1.00.

10-34 PM Sensorless Speed Estimator Low-pass Filter Gain

Default: 1.00

Settings 0.00–655.35

- Changes the response speed of the speed estimator.
- If there is low frequency vibration (the waveform is similar to the sine wave) during the process, then increase the gain. If there is high frequency vibration (the waveform shows extreme vibration and is like a spur), then decrease the gain.
- If Pr.05-33 = 3 (SynRM), then the upper limit becomes 10.00.

10-35 ARM (Kp) Gain

Default: 1.00

Settings 0.00–3.00

- If Pr.00-11 = 8 (SynRM sensorless), then the default becomes 0.40.

10-36 ARM (Ki) Gain

Default: 0.20

Settings 0.00–3.00

- Active Magnetic Regulator Kp / Ki, affects the response of magnetic regulation in the low magnetic area.
- If entering the low magnetic area and the input voltage (or DC bus) plummets (e.g. an unstable power net causes instant insufficient voltage, or a sudden load that makes DC bus drop), which causes the ACR diverge and oc, then increase the gain. If the Id value of a spur creates large noise in high-frequency output current, decrease the gain to reduce the noise. Decrease the gain will slow down the response.

🕮 If Pr.00-11 = 8 (SynRM sensorless), then the default becomes 2.00.

10-37 PM Sensorless Control Word

Default: 0000h

Settings 0000–FFFFh

bit No.	Function	Description
5	Choose a control mode to stop	0: When lower than Pr.10-40, ramp to stop 1: When lower than Pr.10-40, coast to stop

10-39 Frequency to Switch from I/F Mode to PM Sensorless Mode / Frequency to Switch from IMVF Mode to IMFOCPG Mode when Pr.11-00 bit11 = 1 in IMFOCPG Mode

Default: 20.00

Settings 0.00–599.00 Hz

🕮 Sets the frequency for switching from low frequency to high frequency, and sets the switch point for high and low frequencies of the speed observer.

🕮 If the switch frequency is too low, the motor does not generate enough back-EMF to let the speed observer measure the right position and speed of the rotor, causing stall and oc when running at the switch frequency.

🕮 If the switch frequency is too high, the active range of I/F is too wide, which generates a larger current without energy saving. (If the current value for Pr.10-31 is too high, the high switch frequency makes the drive continue to output with Pr.10-31 setting value.)

🕮 If Pr.00-11 = 8 (SynRM sensorless), then the default becomes 10.00 Hz.

🕮 When Pr.11-00 bit11 = 1, Pr.10-39 is the frequency for switching from IMVF to IMFOCPG control modes.

10-40 Frequency to Switch from PM Sensorless Mode to I/F Mode / Frequency to Switch from IMFOCPG Mode to IMVF Mode when Pr.11-00 bit11 = 1 in IMFOCPG Mode

Default: 20.00 / 40.00

Settings 0.00–599.00 Hz / 30.00–599.00 Hz

🕮 Sets the frequency for switching from high frequency to low frequency, and sets the switch point for high and low frequencies of the speed observer.

🕮 If the switch frequency is too low, the motor does not generate enough back-EMF to let the speed observer measure the right position and speed of the rotor when running at the switch frequency.

🕮 If the switch frequency is too high, the active range of I/F is too wide, which generates a larger current without energy saving. (If the current value for Pr.10-31 is too high, the high switch frequency makes the drive continue to output with Pr.10-31 setting value).

🕮 When Pr.11-00 bit11 = 1, Pr.10-40 is the frequency for switching from IMFOCPG to IMVF control modes.

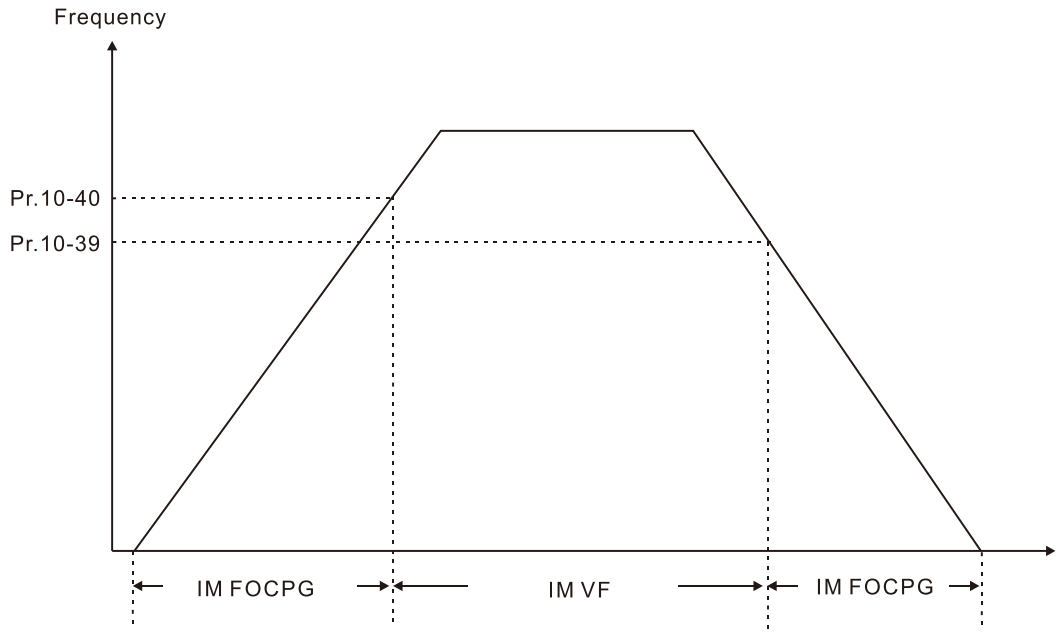

- When Pr.11-00 bit11 = 1, the default value for Pr.10-40 = Pr.10-39 + 20 Hz.
- When Pr.11-00 bit11 = 1, Pr.10-40 cannot be lower than [Pr.10-39 + 10 Hz].
  For example, if Pr.10-39 = 400 Hz, the minimum setting value allowed for Pr.10-40 is 410 Hz.
- Make sure that you have set Pr.10-39 before setting Pr.10-40 and Pr.10-40 must be larger than Pr.10-39. For applications that require shorter acceleration and deceleration time, it is recommended to set Pr.10-40 15 Hz larger than Pr.10-39.
- Pr.10-40 automatically changes with Pr.10-39 setting value, that is, Pr.10-40 = [Pr.10-39 + 20 Hz].
  For example, if Pr.10-39 = 300 Hz, and Pr.10-40 = 310 Hz, then
  Pr.10-40 automatically changes to 420 Hz when Pr.10-39 changes to 400 Hz;
  Pr.10-40 automatically changes to 320 Hz when Pr.10-39 changes to 300 Hz.
- When using Pr.10-39 and Pr.10-40 as the frequency for switching between IMFOCPG and IMVF control modes, set Pr.10-39 and Pr.10-40 within the PG card bandwidth range (300 kHz). For example, if the encoder = 5000 ppr, the PG01L (ABZ) bandwidth = 300 kHz, and the induction motor with two-pole pairs runs in high-speed, then the setting value for Pr.10-40 is lower than 120 Hz [= (300 k / 5000 ppr) × two-pole pairs].

10-41 I/F Mode, Id Current Low Pass-Filter Time

Default: 0.2

Settings 0.0–6.0 sec.

- Sets the filter time for Pr.10-31. Smoothly increases the magnetic field to the current command setting value under the I/F mode.
- If you want to slowly increase the size of Id, increase the filter time to avoid a Step phenomenon occurs when starting current output. When decrease the filter time (minimum value is 0), the current rises faster, then a Step phenomenon occurs.

10-42 Initial Angle Detection Pulse Value

Default: 1.0

Settings 0.0–3.0

- The angle detection is fixed to 3: Use the pulse injection method to start. The parameter influences the value of the pulse during the angle detection. The larger the pulse, the higher the accuracy of rotator's position. A larger pulse might cause oc.
- Increase the parameter when the running direction and the command are opposite during start-up. If oc occurs at start-up, then decrease the parameter.
- Refer to Section 12-2 Adjustment & Application for detailed motor adjustment procedure.

10-43 PG Card Version

Default: Read only

Settings 0.00–655.35

- Corresponding version reference:

PG02U	21.XX
PG01U	31.XX
PG01O / PG01L	11.XX
PG02O / PG02L	14.XX
PG01R	41.XX

10-47 PG1 Pulse Imputation Scaling Factor

Default: 0

Settings 0: x1
1: x2
2: x4
3: x8

- Use Pr.10-47 to set interpolation magnification of the PG1 Sin/Cos signal. After the interpolation is finished, the encoder PPR (Pulses per Revolution) = Pr.10-01 × $2^{Pr.10\text{-}47}$. The larger the interpolation magnification, the more accurate the positioning.
- Example:
  When Pr.10-01 = 128 and Pr.10-47 = 0, PPR= 128 × 2^0 × 4 (four-time frequency) = 1024.
  When Pr.10-01 = 128 and Pr.10-47 = 3, PPR= 128 × 2^3 × 4 (four-time frequency) = 8192.

10-49 Zero Voltage Time during Start-up

Default: 00.000

Settings 00.000–60.000 sec.

- This parameter is valid only when the setting of Pr.07-12 (Speed Tracking during Start-up) = 0.
- When the motor is in static status at start-up, this increases the accuracy when estimating angles. In order to put the motor in static state, set the three-phase drive output to 0 V to the motor. The Pr.10-49 setting time is the length of time when three-phase output at 0 V.
- It is possible that even when you apply this parameter, the motor cannot go into the static state because of inertia or some external force. If the motor does not go into the static state in 0.2 seconds, increase this setting value appropriately.

- If Pr.10-49 is too high, the start-up time is longer. If it is too low, then the braking performance is weak.

10-50 Reverse Angle Limit (Electrical Angle)

Default: 10.00

Settings 0.00–30.00 degree

- When the drive is running forward, if a sudden reverse run occurs and the reverse angle exceeds the setting for Pr.10-50, then a ScRv error occurs.
- This parameter is valid only when the setting of Pr.07-28 =11 (enable textile machine).
- If the estimated tolerance of start-up angle detection is larger, and causes a reverse run of the motor, this parameter can limit the reverse angle.
- Decrease the parameter setting to prevent large reverse angle. If the tolerance is bigger, then increase the parameter setting. If the load is too large at this moment, it may cause oc.

10-51 Injection Frequency

Default: 500

Settings 0–1200 Hz

- This parameter is a high frequency injection command in IPM sensorless control mode and usually you do not need to adjust it. If a motor's rated frequency (for example, 400 Hz) is too close to the frequency setting for this parameter (that is, the Default of 500 Hz), it affects the accuracy of the angle detection. Refer to the setting for Pr.01-01 before you adjust this parameter.
- If the setting value for Pr.00-17 is lower than Pr.10-51 × 10, then increase the frequency of the carrier wave.
- Pr.10-51 is valid only when Pr.10-53 = 2.
- If Pr.00-11 = 8 (SynRM sensorless), then the default becomes 400 Hz.

10-52 Injection Magnitude

Default: 15.0 / 30.0

Settings 0.0–200.0V
230V models: 0.0–100.0 V
460V models: 0.0–200.0 V

- The parameter is the magnitude command for the high frequency injection signal in IPM Sensorless control mode.
- Increasing the parameter can increase the accuracy of the angle estimation, but the electromagnetic noise might be louder if the setting value is too high.
- The system uses this parameter when the motor's parameter is "Auto". This parameter influences the angle estimation accuracy.
- When the ratio of the salient pole (Lq/Ld) is lower, increase Pr.10-52 to make the angle detection more accurate.
- Pr.10-52 is valid only when Pr.10-53 = 2.
- If Pr.05-33 = 3 (SynRM), then the unit becomes %, and the setting range becomes 10–50%, the default becomes 30%.

10-53 PM Initial Rotor Position Detection Method

Default: 0

Settings 0: Disable
1: Force attracting the rotor to zero degrees
2: High frequency injection
3: Pulse injection

When Pr.00-11 = 2 (PMSVC) or Pr.00-11 = 6 (PM Sensorless), for IPM, the setting value is suggested to be 2; for SPM, the setting value is suggested to be 3. You can choose the setting 1 if the result is not good of setting as 2 or 3.

10-54 Magnetic Flux Linkage Estimate Low-speed Gain

Default: 100

Settings 10–1000%

10-55 Magnetic Flux Linkage Estimate High-speed Gain

Default: 100

Settings 10–1000%

Pr.10-54 is the magnetic linkage estimator gain in which the estimated speed is smaller than 1/5 of motor's rated speed.

Pr.10-55 is the magnetic linkage estimator gain in which the estimated speed is equal to or larger than 1/5 of motor's rated speed.

Both Pr.10-54 and Pr.10-55 are valid only when the control mode is PM Sensorless or SynRM Sensorless under speed mode (Pr.00-11 = 6 or 8).

A larger Pr.10-54 setting value helps improve the load capacity at start-up.

A larger Pr.10-55 setting value helps improve the load capacity in high-speed range and quicken the response to magnetic linkage estimator.

If speed oscillation occurs in the flux-weakening region, set Pr.10-55 to a smaller value.

If Pr.05-33 = 3 (SynRM), then the unit becomes Pu, the setting range becomes 0.1–3.0, and the default becomes 1.0.

10-56 Kp of Phase-locked Loop

Default: 100

Settings 10–1000%

A larger Pr.10-56 setting value helps improve the load capacity in high-speed range and quicken the response to magnetic linkage estimator.

Decrease the setting value when the speed output frequency has high-frequency oscillation.

If Pr.05-33 = 3 (SynRM), then the unit becomes Hz, the setting range becomes 5–50, and the default becomes 30.

10-57 Ki of Phase-locked Loop

Default: 100

Settings 10–1000%

A larger Pr.10-57 setting value helps improve the speed response during the acceleration / deceleration.

10-58 Mutual Inductance Gain Compensation

Default: 1.00

Settings 0.00–655.35

📖 This parameter is valid only when SynRM sensorless (Pr.00-11 = 8).

📖 Adjust Pr.10-58 setting value to improve the load capacity when the start-up performance of the motor is not good or the speed is slower than the setting of Pr.10-39.

10-60 Coordinate Axis System Setting

Default: 1.00

Settings bit0–3: Axis control mode

0: Increment operation

1: Absolute operation (only for absolute encoder)

bit4–7: Coordinate axis mode

0: Linear axis 0x6064 position output range is +/-2^{31}

1: Rotating axis 1 0x6064 position output limits in the setting for Pr.10-61 and Pr.10-62

2: Rotating axis 2 0x6064 position output range is +/-2^{31}, the initial position limits in setting for Pr.11-61 and Pr.11-62 when initializing (power ON, homing)

bit8–11: Encoder overflow treatment

0: Warn but continue operation until stop

1: Warn and stop

2: No warn and continue operation

bit12–15: Encoder type

1: Increment encoder

2: Absolute encoder

📖 The default for Pr.11-60 is 0200H. After you set Pr.10-00, the Pr.11-60 automatically returns to default:

When Pr.10-00 is set as absolute encoder, Pr.11-60 = 0x1001h.

When Pr.10-00 is set as increment encoder, Pr.11-60 = 0x0200h.

15	14	13	12	11	10	9	8	7	6	5	4	3	2	1	0
Encoder Type				Treatment of Encoder Overflow				Coordinate System Type				Axis Control Mode			

📖 bit0–3: Axis control mode

- There are two axis control modes: incremental operation and absolute operation.
- Incremental operation: Does not memorize position data. The homing positioning function re-aligns and operates after power off.
- Incremental encoder does not provide multi-turn information; therefore, the incremental encoder can be only used for incremental operation.
- Absolute operation: Through memorizing multi-turn position, the drive memorizes all the motor displacement after power off, and re-calculates the mechanical absolute position. The drive can operate without re-executing homing positioning function.

- The absolute encoder selects whether to use multi-turn data, therefore, you can use the absolute encoder as incremental encoder and set to “Incremental operation”, or you can use its memorizing multi-turn data function as “Absolute operation”.

📖 bit4–7: Coordinate axis mode:

- The motor mechanical structure application is divided into linear motion and rotation motion in general, which are defined as “Linear axis application” and “Rotation axis application”.
- Linear axis application: Generally for limited progress application, such as screw bar mechanical structure. The shifting on the linear structure has its operation distance range, and the motor operation does not exceed the corresponded rotation laps. The mechanical structure usually configures protection component such as limited switch, or sets the maximum and minimum setting range (FWD / REV software limits) to the command.
- Rotation axis application: This application has different operating method depending on whether the mechanical structure has progress limitation. If yes, it usually configures limited switch or sets the maximum and minimum range to the command, same as the operation for linear axis application. If the mechanical structure does not have progress limitation, the motor allows unlimited operation in the same direction. It can still operate even the multi-turn information overflows, and the position information that provided to the upper controller must be correct and continuous.
- Rotation axis unlimited progress application also defines the position (Pr.10-61, Pr.10-62) of mechanical structure’s single-turn relative to the motor. For example: For a cam application, it defines that when the mechanism rotates one lap, the displacement relative to the motor is 100 laps. The position that the drive feedback to the upper controller is also locked under these 100 laps. Even when the motor rotates for over 100 laps, the coordinate system module still calculates the displacement as data under 100 laps. For instance, when the motor rotates for 101 laps, its calculated displacement is the same as the displacement that motor rotates for 1 lap on the mechanical structure.

📖 bit8–11: Encoder overflow treatment:

- The absolute encoder memorizes multi-turn information, but there is still upper limit for the memorizing capacity. Take Tamagawa for example, the total capacity is 16 bit, when the drive operates in the same direction and the multi-turn information overflows, the encoder issues an overflow alert, and the multi-turn information continues to count in the same direction.
- There are three treatment for bit8–11 overflow:
  1. bit8–11 = 0: Warn but continue operation:
     The drive issues the alert when overflow occurs, but still receives command from the upper controller and continues operation.
  2. bit8–11 = 1: Warn and stop
     The drive issues the alert when overflow occurs, and automatically stops.
  3. bit8–11 = 2: no warn and continue operation
     The drive ignores the overflow, does not issue alert, it continues receiving the upper controller’s command and continues operation.

📖 bit12–15: Encoder type:

- The encoder is divided into two types: incremental encoder and absolute encoder. The difference is the multi-turn information providing and power-off memorizing function.
- Incremental encoder: the incremental encoder cannot provide multi-turn information, it cannot memorize after power-off, either. Generally, its usage on positioning application is to perform homing action again after power-off. Only after correcting the coordinate axis of upper controller and position controller to the mechanical structure coordinate, the drive can continue the action.
- Absolute encoder: the absolute encoder provides multi-turn information and supports power-off memorizing function (for example: the encoder has installed an extra battery on the power supply), the multi-turn information is recorded and continuously counted in the encoder after power loss. When rebooting the power, the drive can read the complete position information before and after the power loss, which is the absolute position of the motor.

10-61 Mechanical Cycle Range (High Word)

Default: 0

Settings 0–65535

10-62 Mechanical Cycle Range (Low Word)

Default: 0

Settings 0–65535

📖 Pr.10-61 and Pr.10-62 are the displacement of mechanism one lap rotation related to the motor. The 0x6064 position output range is limited in the mechanical cycle range.

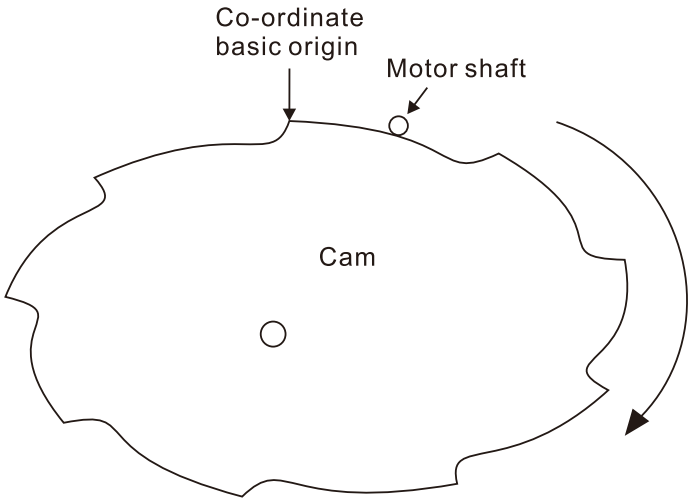

📖 For example: Mechanism rotates for 1 lap = motor rotates for 500000 laps. Setting range for Pr.10-61 and Pr.10-62 is 500000. 500000 ÷ 65535 = (7 × 65535) + 41255. Pr.10-61 = 7, Pr.10-62 = 41255.

📖 Pr.10-60 bit4–7 Coordinate axis mode = 1 (Rotating axis 1):
Because it is a rotate axis, if the motor rotates for 500100 laps, the cam mechanism rotates for 1 + (100 ÷ 500000) laps. That is, the last position of the cam mechanism is to move from the original position to the position of 100 / 500000. Through Pr.10-61 and Pr.10-62, the drive reads the cam position as the 100th laps position of the motor rotation (object 0x6064 output = 100).

📖 Pr.10-60 bit4–7 Coordinate axis mode = 2 (Rotating axis 2):

Because the range of the object 0x6064 has changed to +/-2^{31}, when the motor rotates over 500000 laps, object 0x6064 continues to count. When the motor rotates to 500100 laps, the output of 0x6064 is 500100. After power off and rebooting the power, the output of 0x6064 is 100.

[This page intentionally left blank]

11 Advanced Parameters

In this parameter group, ASR stands for Adjust Speed Regulator.

You can set this parameter during operation.

11-00 System Control

Default: 0000h

Settings bit0: Auto-tuning for ASR
bit1: Inertia estimate (only in FOCPG mode)
bit2: Zero servo
bit6: 0 Hz linear-cross
bit7: Save or do not save the frequency
bit8: Maximum speed for point-to-point position control
bit11: Switch between IMFOCPG and IMVF modes

bit0 = 0: Manual adjustment for ASR gain, Pr.11-06–Pr.11-11 are valid and Pr.11-03–Pr.11-05 are invalid.

bit0 = 1: Auto-adjustment for ASR gain, the system automatically generates an ASR setting, Pr.11-06–Pr.11-11 are invalid and Pr.11-03–Pr.11-05 are valid.

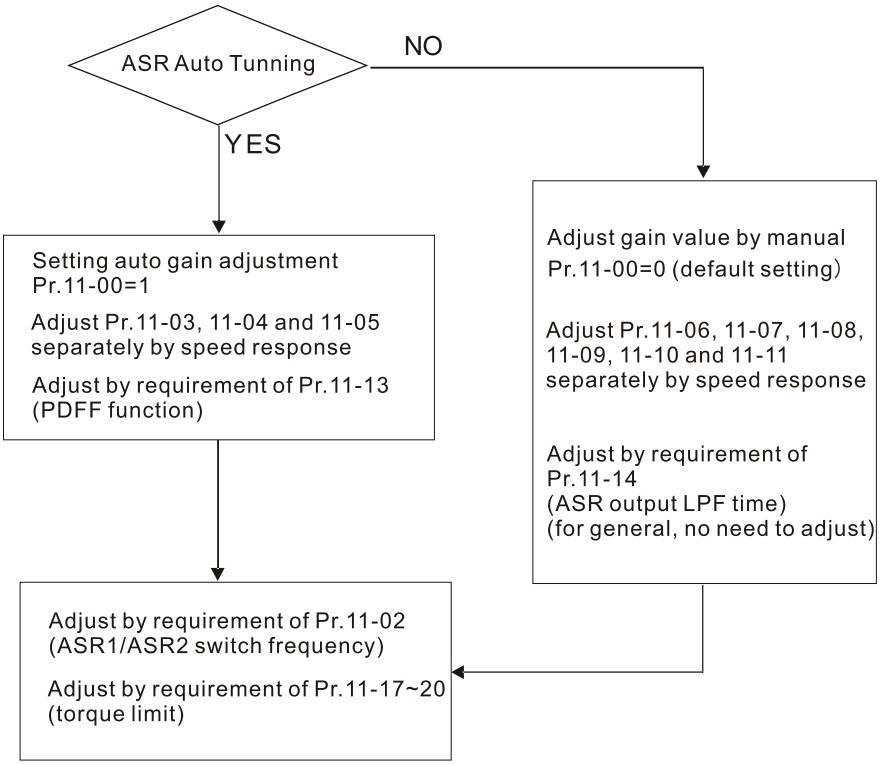

When the drive needs to keep a certain torque at zero-speed, or it needs a steady frequency output at extreme low speed, increase Pr.11-05 zero-speed bandwidth appropriately. When the speed is in high-speed area, if the output current trembles seriously and makes the drive vibrate, then decrease the high-speed bandwidth.

For example:

Manual gain	Response: [Pr.11-10, Pr.11-11] > [Pr.11-06, Pr.11-07] > [Pr.11-08, Pr.11-09]
Auto gain	Pr.11-05 = 15 Hz, Pr.11-03 = 10 Hz, Pr.11-04 = 8 Hz

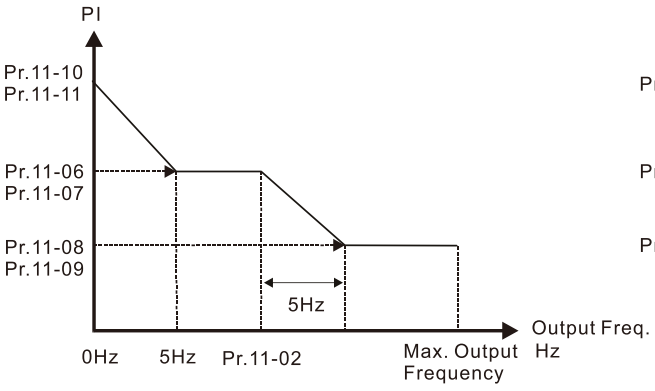

ASR adjustment- manual gain

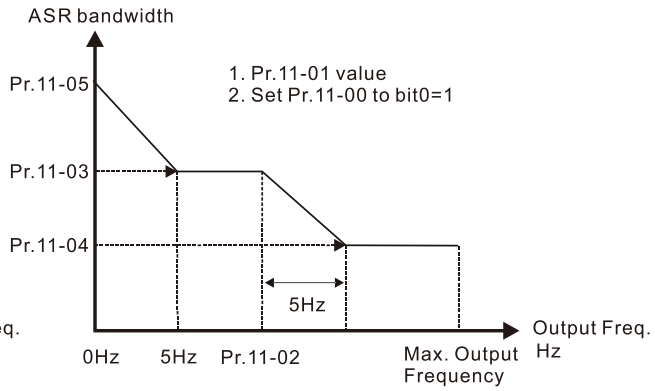

ASR adjustment- auto gain

bit1 = 0: no function.

bit1 = 1: Inertia estimation function is enabled. bit1 setting would not activate the estimation process, set Pr.05-00 = 12 to begin FOC / TQC Sensorless inertia estimating.

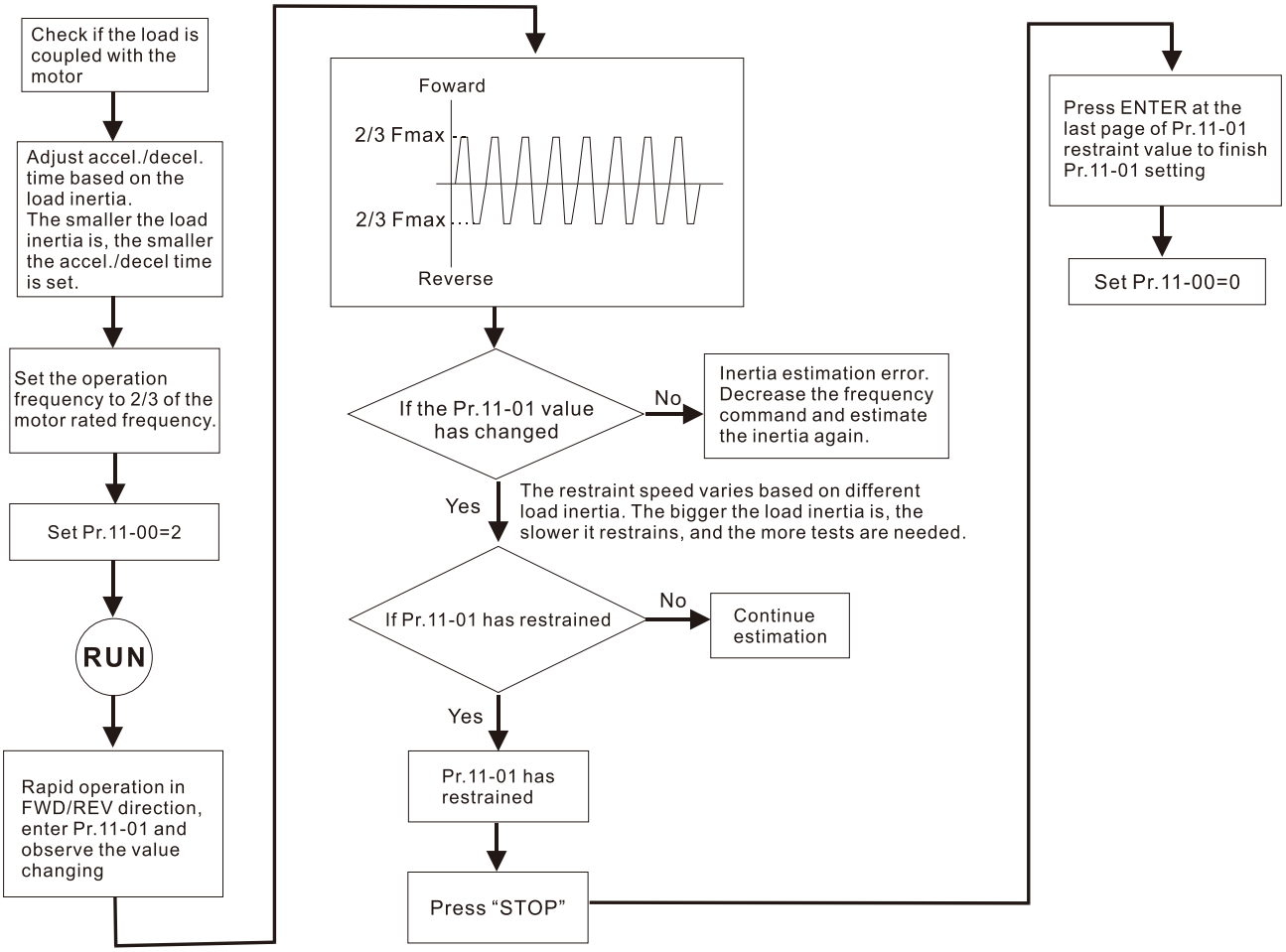

bit2 = 0: no function.

bit2 = 1: when frequency command is less than Fmin (Pr.01-07), it uses the zero-servo function as position control.

bit6 0 Hz linear-cross function: keeps the S-Curve in linear-cross the 0 Hz point when the S acceleration / deceleration curves (Pr.01-24–Pr.01-27) are set, and the forward / reverse run cross 0 Hz.

bit6 = 1: The S acceleration / deceleration curves (Pr.01-24–Pr.01-27) do NOT affect the drive

starts and stops. Forward / reverse rotation crosses the zero point in linear.

bit6 = 0: The S acceleration / deceleration curves (Pr.01-24–Pr.01-27) affect the drive starts and stops. Forward / reverse rotation crosses the zero point after the S-Curve.

Green line: Frequency command

Red line: Frequency command with acceleration / deceleration

Blue line: The motor's actual output frequency

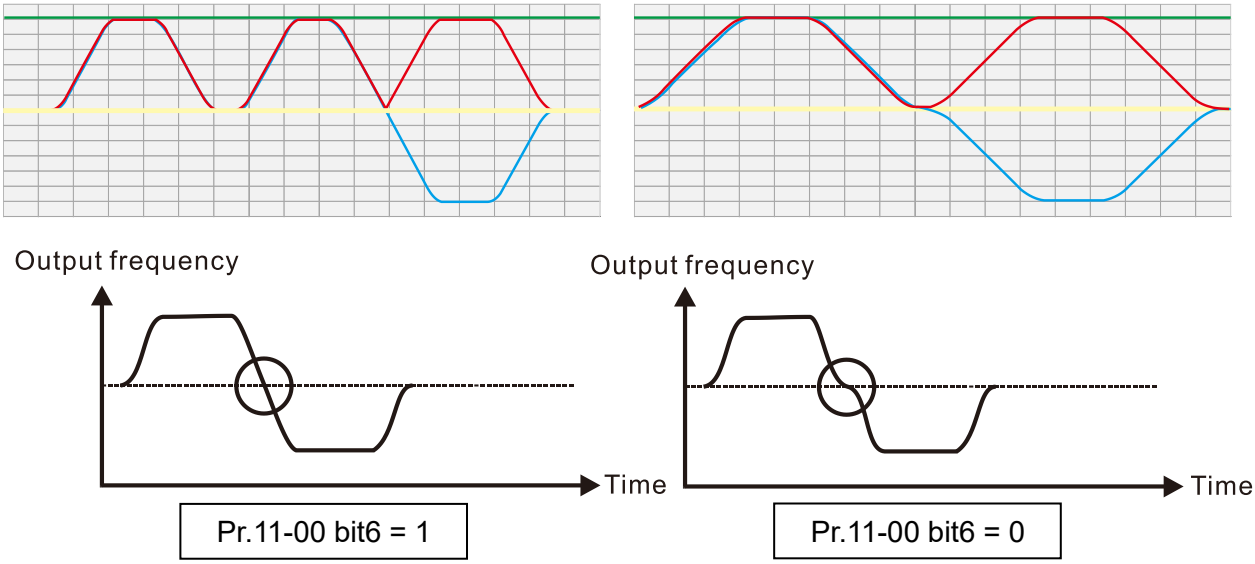

- bit7 = 0: Save the frequency before power is OFF. When power is ON again, the saved frequency is displayed.
  bit7 = 1: Do not save the frequency before power is OFF. When power is ON again, 0.00 Hz is the displayed frequency.
- Pr.11-00 bit7 is valid when Pr.00-20 (Master frequency command source) is set to 0 (digital keypad), 1 (RS-485 communication input) or 3 (External UP / DOWN terminal), other frequency commands are invalid.
- bit8 = 0: Pr.11-43 sets the maximum speed for point-to-point position control
  bit8 = 1: The external multi-speed terminal sets the maximum speed for point-to-point position control. When the external multi-speed terminal is 0, Pr.11-43 sets the maximum speed.
- bit11 = 1 (0800h): enable the mode-switching function
  bit11 = 0: disable the mode-switching function.
- The function to switch between IMFOCPG and IMVF is only valid in IM FOCPG control mode.
- The mode-switching function of bit11 is applicable for the high-speed operation region of IMFOCPG or feedback of high ppr. If the speed of the motor is too fast and cause the feedback signal frequency to be higher than the hardware bandwidth of PG card, then you can use Pr.10-39 and Pr.10-40 to switch open-loop IMVF and close-loop IMFOCPG.

11-01 Per Unit of System Inertia

Default: 256

Settings 1–65535 (256 = 1PU)

- To get the system inertia per unit from Pr.11-01, you need to set Pr.11-00 to bit1 = 1 and execute continuous forward / reverse running.

- When Pr.11-01 = 256, it is 1PU. So if you use a 2 HP motor, the 2 HP motor inertia is 4.3 kg-cm^2 according to the table below. If Pr.11-01 = 10000 after tuning, the system inertia is (10000 ÷ 256) × 4.3 kg-cm^2.
- Perform the operation test with load based on the inertia after tuning. Run the motor in acceleration, deceleration, and steady speed and observe the values. If values between speed feedback and speed command are close, steady-state error is small and overshoot is less, then this inertia is a better one.
- If the Iq current command from ASR has high-frequency glitch, then decrease the setting. If the response time of sudden loading is too slow, then increase the setting.
- When using torque mode as the control mode, perform the tuning with speed mode first to see if the tuned inertia can work normally. After verifying with speed mode, change the control mode to torque mode.

Unit of induction motor system inertia is kg-cm^2:

HP	kW	Setting	HP	kW	Setting	HP	kW	Setting
1	0.7	2.3	30	22	176.5	215	160	2800.0
2	1.5	4.3	40	30	202.5	250	186	3550.0
3	2.2	8.3	50	37	355.5	300	224	5139.0
5	3.7	14.8	60	45	410.8	375	279	5981.0
7	5.5	26.0	75	56	494.8	425	317	5981.0
10	7.5	35.8	100	75	1056.5	475	354	5981.0
15	11	74.3	120	89	1275.3	600	447	5981.0
20	15	95.3	150	112	1900.0	650	485	5981.0
25	18	142.8	175	130	2150.0	750	559	5981.0

The base value for induction motor system inertia is set by Pr.05-38 and the unit is in kg-cm^2.

11-02 ASR1 / ASR2 Switch Frequency

Default: 7.00

Settings 5.00–599.00 Hz

- Sets the low-speed and high-speed ASR switching point in the FOC area. Provides flexibility to meet two needs: in the high-speed region of the estimator switch point it has a high response, and in the low-speed region of the estimator switch point it has a lower response. The recommended switching point is higher than Pr.10-39.
- A low setting does not cover Pr.10-39. If the setting is too high, the high-speed range is too narrow.
- If Pr.00-11 = 8 (SynRM sensorless), then the default becomes 10.00 Hz.

11-03 ASR1 Low-speed Bandwidth

Default: 10

Settings 1–[(Pr.00-17 carrier frequency) ÷ 40] Hz

11-04 ASR2 High-speed Bandwidth

Default: 10

Settings 1–[(Pr.00-17 carrier frequency) ÷ 40] Hz

11-05 Zero-speed Bandwidth

Default: 10

Settings 1–[(Pr.00-17 carrier frequency) ÷ 40] Hz

- After estimating inertia and setting Pr.11-00 bit0 = 1 (auto-tuning), you can adjust Pr.11-03, Pr.11-04 and Pr.11-05 separately by speed response. The larger the setting value, the faster the response. Pr.11-02 is the switch frequency between the low-speed / high-speed bandwidth.
- If Pr.00-11 = 8 (SynRM sensorless), then the upper limit value becomes 30, and the default becomes 5.
- The maximum value and default of Pr.11-03–11-05 are as the table below:

	IM					PM					SynRM	
Control Mode	FOC	TQC	TQC PG	FOC PG	Position Control	TQC PG	FOC PG	FOB	IPM FOC	Position Control	FOC	TQC
Max. Value (Hz)	40	40	[Pr.00-17 (Fc)] ÷ 40 Ex. Pr.00-17 = 10 kHz 10000 ÷ 40 = 250 Hz			[Pr.00-17 (Fc)] ÷ 40 Ex. Pr.00-17 = 10 kHz 10000 ÷ 40 = 250 Hz					30	30
Default (Hz)	10	10	10	10	10	10	10	10	10	10	5	5

11-06 ASR 1 Gain

Default: 10

Settings 0–40 Hz (IM) / 1–100 Hz (PM)

11-07 ASR 1 Integral Time

Default: 0.100

Settings 0.000–10.000 sec.

11-08 ASR 2 Gain

Default: 10

Settings 0–40 Hz (IM) / 0–100 Hz (PM)

11-09 ASR 2 Integral Time

Default: 0.100

Settings 0.000–10.000 sec.

11-10 ASR Gain of Zero Speed

Default: 10

Settings 0–40 Hz (IM) / 0–100 Hz (PM)

11-11 ASR Integral Time of Zero Speed

Default: 0.100

Settings 0.000–10.000 sec.

11-12 ASR Speed Feed Forward Gain

Default: 0

Settings 0–150%

- This function enables when Pr.11-00 bit0 = 1.
- Increase the setting for Pr.11-12 to reduce the command tracking difference and improve the speed response. Use this function for speed tracking applications.
- Set Pr.11-01 correctly to get excellent improvement of the speed response.

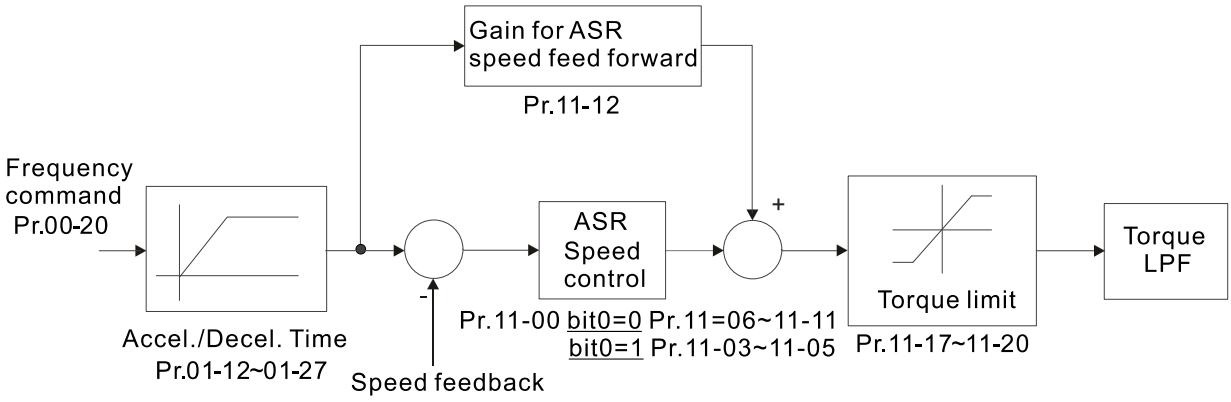

11-13 PDFF Gain Value

Default: 30

Settings 0–200%

- This parameter is invalid when Pr.05-24 = 1.
- This parameter is valid only when Pr.11-00 bit0 = 1.
- After you estimate and set Pr.11-00 bit0=1 (auto-tuning), use Pr.11-13 to reduce overshoot. However, a shift of the curve may occur earlier. In this case, you can set Pr.11-13 = 0 first, and then increase the setting value to "a condition with best acceleration and without overshoot" when the acceleration time meets your application but overshoot occurs.
- Increasing Pr.11-13 improves the overshoot of speed tracking, but an excessive value may reduce the transient response.
- Increasing Pr.11-13 enhances the system stiffness in high-speed steady state and reduce the speed transient fluctuation at a sudden loading.
- Ensure that you set Pr.11-01 system inertia correctly to get excellent improvement of the speed response.

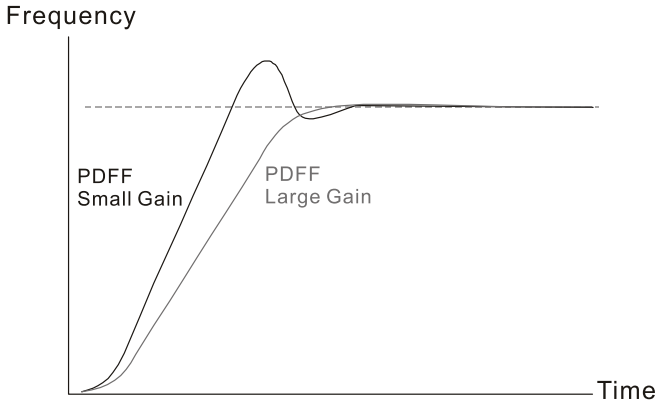

11-14 ASR Output Low Pass Filter Time

Default: 0.004

Settings 0.000–0.350 sec.

- Sets the ASR command filter time.

11-15 Notch Filter Depth

Default: 0

Settings 0–100 dB

11-16 Notch Filter Frequency

Default: 0.00

Settings 0.0–6000.0 Hz

11-47 Notch Filter Bandwidth

Default: 0

Settings 0–1000 Hz

- A notch filter is a filter that attenuates a signal in a specific frequency band.
- The notch filter also slows down the response speed in the frequency band to avoid mechanical resonance.
- The higher the setting value for Pr.11-15, the better the mechanical resonance is suppressed.
- The notch filter frequency should be equal to the mechanical frequency resonance.
- The notch filter bandwidth is the frequency range in which the notch filter is active.

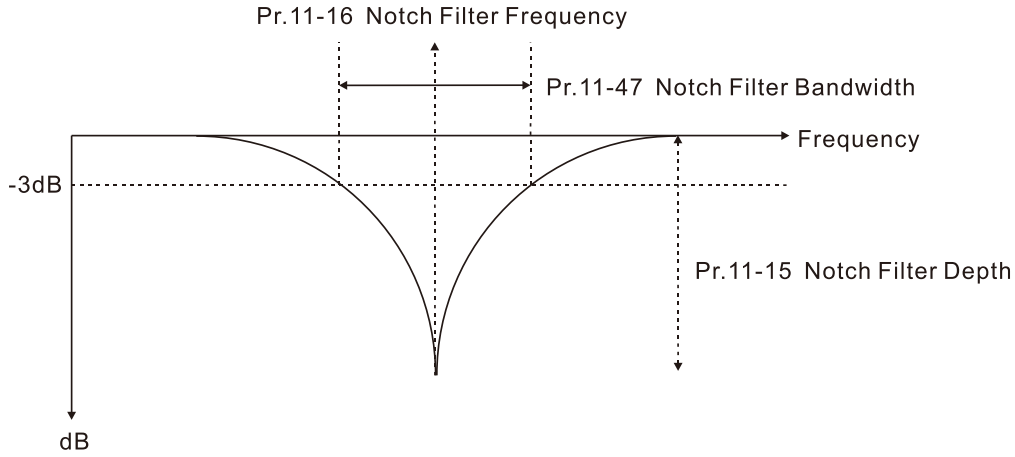

11-17 Forward Motor Torque Limit Quadrant I
11-18 Forward Regenerative Torque Limit Quadrant II
11-19 Reverse Motor Torque Limit Quadrant III
11-20 Reverse Regenerative Torque Limit Quadrant IV

Default: 500

Settings 0–500%

- FOCPG & FOC Sensorless mode:
  The motor rated current = 100%. The settings value for Pr.11-17–Pr.11-20 is compared with Pr.03-00 = 7, 8, 9, 10. The minimum value of the comparison result is the torque limit. The diagram below illustrates the torque limit.
- TQCPG and TQC Sensorless mode:
  The function of Pr.11-17–Pr.11-20 is the same as FOC; however, in this case, the torque limit and the torque command executes the output torque limit at the same time. Therefore, the minimum value between Pr.11-17–11-20 and Pr.06-12 becomes the current output torque limit.

VF, VFPG and SVC mode:

Pr.11-17–Pr.11-20 limit the output current, the percentage base value is the drive's rated current (not the motor's rated current). The minimum value between Pr.11-17–11-20 and Pr.06-12 becomes the current output limit. In acceleration and steady state operation, when the output current reaches the limit, the ocA (over-current during acceleration) protection or over-current stall prevention under steady-state operation acts. The output frequency drops, and recovers when the output current is lower than the limit value.

Refer to Pr.11-34 for calculation equation for the motor rated torque.

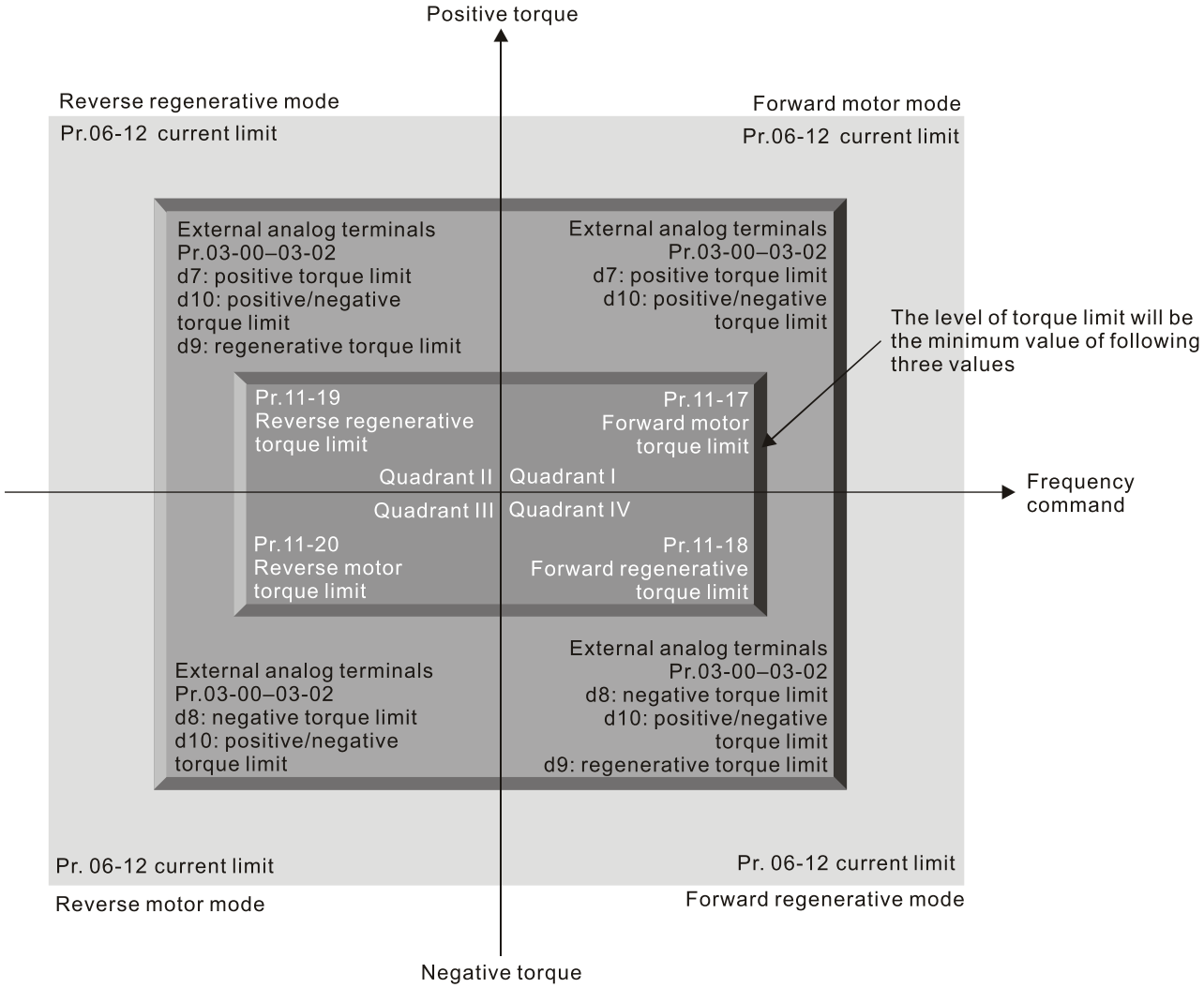

All control mode is based on 100% of the motor rated current except for these four modes: IM: VF, VFPG, SVC / PM: PMSVC modes.

If Pr.00-11 = 8 (SynRM sensorless), then the default becomes 200.

11-21 Flux Weakening Curve for Motor 1 Gain Value

Default: 90

Settings 0–200%

11-22 Flux Weakening Curve for Motor 2 Gain Value

Default: 90

Settings 0–200%

Adjusts the output voltage for the flux-weakening curve.

For the spindle application, use this adjustment method:

1. Run the motor to the highest frequency.
2. Observe the output voltage.
3. Adjust the Pr.11-21 (motor 1) or Pr.11-22 (motor 2) setting to make the output voltage reach the motor rated voltage.
4. The larger the setting value, the greater the output voltage.

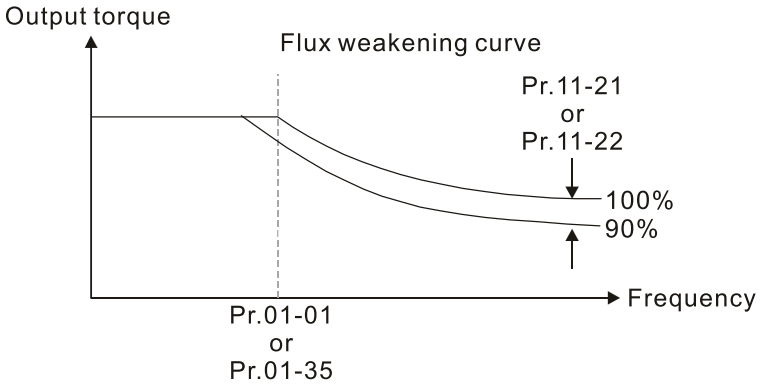

11-23 Flux Weakening Area Speed Response

Default: 65

Settings 0–150%

Controls the speed in the flux weakening area. The larger the value, the faster the acceleration/deceleration. In normal condition, you do not need to adjust this parameter.

11-24 APR Gain

Default: 5.00

Settings 0.00–40.00 Hz (IM) / 0–100.00 Hz (PM)

Defines the Kp gain for the Automatic Position Regulator (APR). The larger the APR proportional gain, the higher the position loop response bandwidth.

A large APR proportional gain causes a smaller phase margin, further making the motor oscillate back and forth. In this case, decrease the APR proportional gain value until the oscillation stops.

The smaller the APR proportional gain, the less the motor rigidity when positioning.

If increasing APR proportional gain does not meet your application even APR proportional gain is much larger than ASR speed bandwidth, adjust ASR speed bandwidth to a suitable value before adjusting APR proportional gain.

The actual position curve when increasing the APR proportional gain: from A to C (C > B > A). The dotted line is the position command, as shown in the diagram below.

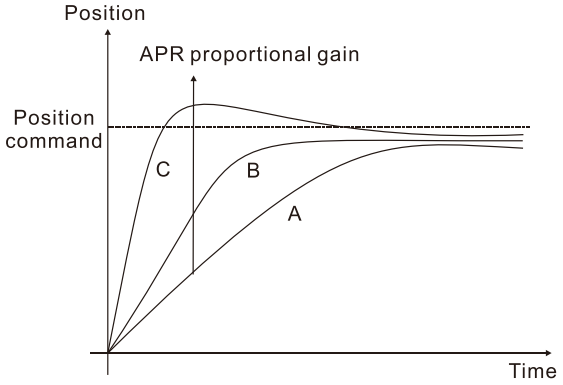

11-25 Gain Value for the APR Feed Forward

Default: 90

Settings 0–100

- Use this parameter to improve the drive's tracking characteristics of position control and reduce the phase lag error. The higher the APR feedforward gain value, the less the pulse-train tracking error, and the faster the position control response. However, setting the APR feedforward gain too high may cause overshoot.
- When external torque occurs, for example, if there is a load increase on the platform, too low proportional gain may not be able to meet your application for position tracking error. At this time, increase the APR feedforward gain appropriately to reduce the position dynamic tracking error effectively.
- Switch between the speed mode and position control mode:
  - When you switch from the speed mode to the position control mode, Pr.11-25 is automatically set to 100.
  - When you switch from the position control mode to the speed mode, Pr.11-25 remains at the setting value you have set.

11-26 APR Feed Forward Low Pass Filter Bandwidth

Default: 10.00

Settings 0.00–655.35 Hz

- This parameter is the low-pass filter bandwidth for the APR feedforward gain (Pr.11-25). A rapid change of position input command may sometimes cause vibration when using the APR feed forward gain. Increase the low-pass filter bandwidth to reduce vibration.

11-27 Max. Torque Command

Default: 100

Settings 0–500%

- Determines the upper limit of the torque command (motor rated torque is 100%).

11-28 Torque Offset Source

Default: 0

Settings 0: Disable
1: Analog signal input (Pr.03-00)
2: Pr.11-29
3: Controlled through external terminals (Pr.11-30–Pr.11-32)

- Specifies the torque offset source.
- When set to 3 (external terminal control), the torque offset sources are Pr.11-30, Pr.11-31 or Pr.11-32 according to the multi-function input terminal settings 31, 32 or 33. Refer to the following chart:

Normally open (N.O.) contact: ON= contact closed, OFF= contact open

Pr.11-32	Pr.11-31	Pr.11-30	Torque Offset
MIx = 33 (Low)	MIx = 32 (Mid)	MIx = 31 (High)	
OFF	OFF	OFF	None
OFF	OFF	ON	Pr.11-30
OFF	ON	OFF	Pr.11-31
OFF	ON	ON	Pr.11-30 + Pr.11-31
ON	OFF	OFF	Pr.11-32
ON	OFF	ON	Pr.11-30 + Pr.11-32
ON	ON	OFF	Pr.11-31 + Pr.11-32
ON	ON	ON	Pr.11-30 + Pr.11-31 + Pr.11-32

11-29 Torque Offset Setting

Default: 0.0

Settings -100.0–100.0%

Determines the torque offset command. The motor rated torque is 100%.

11-30 High Torque Offset

Default: 30.0

Settings -100.0–100.0%

11-31 Middle Torque Offset

Default: 20.0

Settings -100.0–100.0%

11-32 Low Torque Offset

Default: 10.0

Settings -100.0–100.0%

When Pr.11-28 is set to 3, the torque offset sources are Pr.11-30, Pr.11-31 or Pr.11-32 according to the multi-function input terminals settings 31, 32 or 33. The motor rated torque is 100%.

11-33 Torque Command Source

Default: 0

Settings 0: Digital keypad
1: RS-485 communication (Pr.11-34)
2: Analog signal input (Pr.03-00–03-02)
3: CANopen
5: Communication expansion card

When Pr.11-33 is set to 0 or 1, you can set the torque command in Pr.11-34.

When Pr.11-33 is set to 2, 3 or 5, Pr.11-34 only displays the torque command.

11-34 Torque Command

Default: 0.0

Settings -100.0–100.0% (Pr.11-27 = 100%)

- This parameter sets the torque command. When Pr.11-27 is 250% and Pr.11-34 is 100%, the actual torque command = 250 × 100% = 250% of the motor rated torque.
- The drive saves the setting before power is OFF.
- The calculation equation for the motor rated torque:

  Motor rated torque: $T(N.M) = \frac{P(W)}{\omega(rad/s)}$; P(W) value = Pr.05-02 (Pr.05-14);

  ω(rad/s) value = Pr.05-03 (Pr.05-15); $\frac{RPM \times 2\pi}{60} = rad/s$

11-35 Torque Command Filter Time

Default: 0.000

Settings 0.000–1.000 sec.

- When the setting is too long, the control is stable but the control response is delayed. When the setting is too short, the response is quick but the control may be unstable. Adjust the setting according to your control and response situation.
- If Pr.00-11 = 8 (SynRM sensorless), then the default becomes 0.050.

11-36 Speed Limit Selection

Default: 0

Settings
0: Set by Pr.11-37 (Forward Speed Limit) and Pr.11-38 (Reverse Speed Limit)
1: Set by Pr.00-20 (Source of Master Frequency Command) and Pr.11-37, Pr.11-38
2: Set by Pr.00-20 (Source of Master Frequency Command).

- Speed limit function: when you use the torque control mode, if the torque command is greater than the load, the motor accelerates until the motor speed equals the speed limit. At this time, it switches to speed control mode to stop acceleration.
- Pr.11-36 = 1:

  When the torque command is positive, the forward speed limit is Pr.00-20 and the reverse speed limit is Pr.11-38. When the torque command is negative, the forward speed limit is Pr.11-37 and the reverse speed limit is Pr.00-20.

  Example:

  In an unwinding application, if the torque command direction is different from the motor operating direction, the load drives the motor. In this case, the speed limit must be Pr.11-37 or Pr.11-38. Only in normal applications, when the motor drives the load and the torque command is in the same direction as the speed limit, you can set the speed limit according to Pr.00-20.
- In torque control mode, the F page of keypad displays the present speed limit value. For details on the keypad display, refer to the LED Function Description in Chapter10 “Digital Keypad”.

Pr.11-36=0

Forward/reverse running speed are limited by Pr.11-37 and Pr.11-38

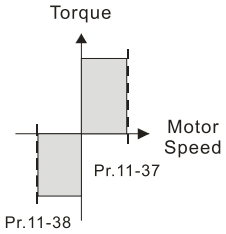

Pr.11-36=2

Forward/reverse running speed are limited by Pr.00-20

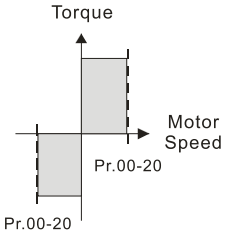

Pr.11-36=1

When torque is positive, forward running speed is limited by Pr.00-20; reverse running speed is limited by Pr.11-38

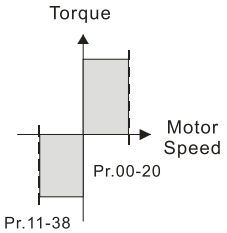

Pr.11-36=1

When torque is negative, forward running speed is limited by Pr.11-37; reverse running speed is limited by Pr.00-20

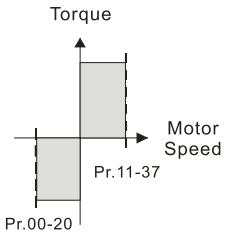

11-37 Forward Speed Limit (Torque Mode)

Default: 10

Settings 0–120%

11-38 Reverse Speed Limit (Torque Mode)

Default: 10

Settings 0–120%

Limits the speed for forward and reverse running in torque mode (Pr.01-00 maximum operation frequency = 100%).

11-39 Zero Torque Command Mode Selection

Default: 0

Settings 0: Torque mode
1: Speed mode

This parameter is only valid in TQCPG IM and TQCPG PM, and it defines the mode when the speed limit is 0% or 0 Hz.

When you set Pr.11-39 to 0, and the speed limit is 0% or 0 Hz, the motor generates an excitation current, and the torque command Pr.11-34 limits the torque.

When you set Pr.11-39 to 1, and the speed limit is 0% or 0 Hz, the AC motor drive can generate output torque through the speed controller (the torque limit is Pr.06-12), and the control mode changes from TQC + PG to FOC + PG mode. The motor has a holding torque. If the speed command is not 0, the drive automatically changes it to 0.

11-40 Position Control Command Source

Default: 0

Settings 0: Input from internal register
1: Input from external pulse
2: RS-485
3: CANopen
5: Communication card

11-42 System Control Flag

Default: 0000h

Settings 0000–FFFFh

bit No.	Function	Description
0	Current limit selection of the speed control in torque mode	0: The speed control in torque mode, the maximum current limit is the torque command. 1: The speed control in torque mode, the maximum current limit is Pr.06-12.
1	FWD / REV action control	0: FWD / REV cannot be controlled by Pr.02-12 bit 0 & 1 1: FWD / REV can be controlled by Pr.02-12 bit0 & 1
8	Frequency reached judgement selection in speed mode	0: Frequency reached: the frequency error < 2 Hz, it is judged as speed reach 1: Speed reached: refer to Pr.02-63 and Pr.02-77

When Pr.11-42 bit8 = 1, the speed reached judgement refers to Pr.02-63 and Pr.02-77:

1. When the speed error ≤ Pr.02-63 (Frequency brake detection amplitude) and exceeds the set time of Pr.02-77, it judges as speed reached and outputs MO = 2 (Operation speed reached).
2. During the setting time of Pr.02-77, if the speed error > Pr.02-63 (Frequency Reached Detection Amplitude), you must wait again for the speed error ≤ Pr.02-63 and the Pr.02-77 delay time arrives, then the speed reached signal (MO=2) can be output.

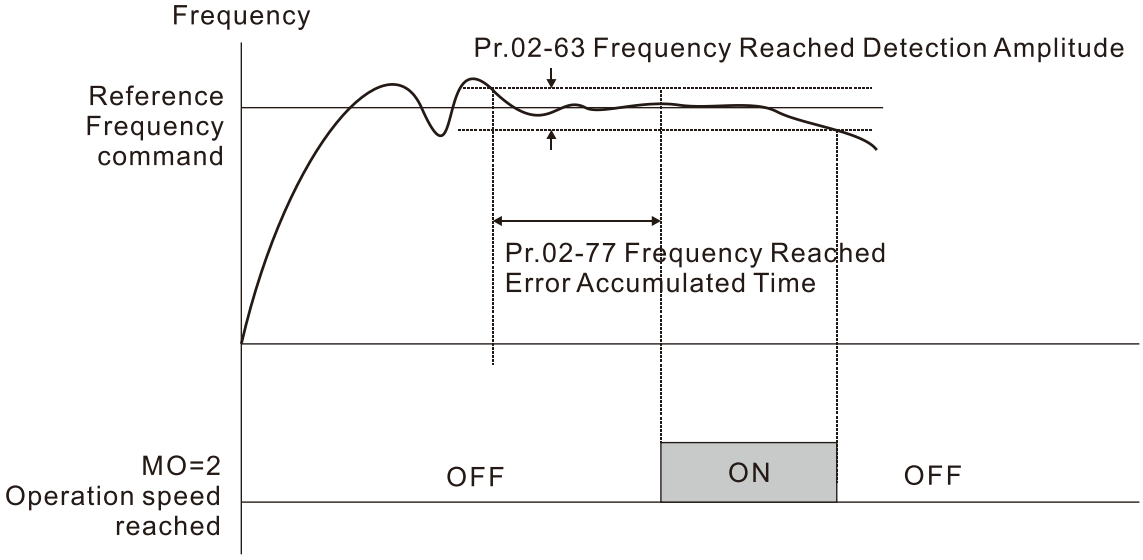

When Pr.11-42 bit8 = 0, the frequency reached is judged as below:

1. When the frequency error < ±2 Hz, it judges as speed reached.
2. When the frequency error > ±4 Hz, the speed does not reach.

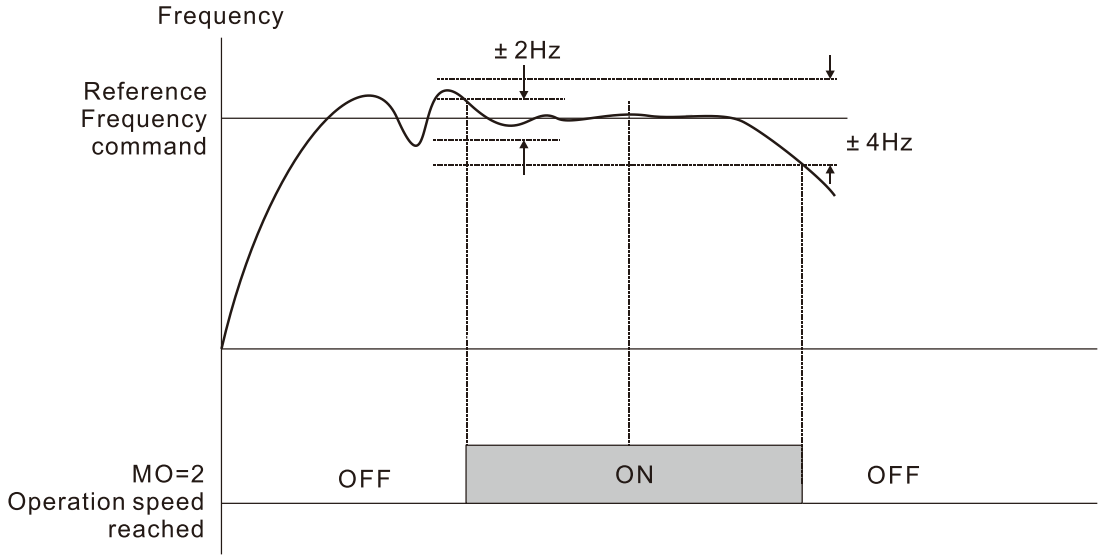

11-43 Position Control Maximum Frequency

Default: 10.00

Settings 0.00–599.00 Hz

Sets the maximum operating frequency when the drive is in position control mode.

Also sets the speed limit for pulse-train positioning position control. If the output frequency reaches the maximum frequency for position control, the system uses the maximum frequency for position control as the operating frequency and slowly executes the remaining pulse-train commands.

If the multi-function input terminal MIx = 35 (enable single-point positioning) is enabled under the speed mode, the drive refers to Pr.11-43 settings when executing the single-point positioning. Refer to the diagram below when Pr.11-43 is set to 40 Hz and 10 Hz respectively.

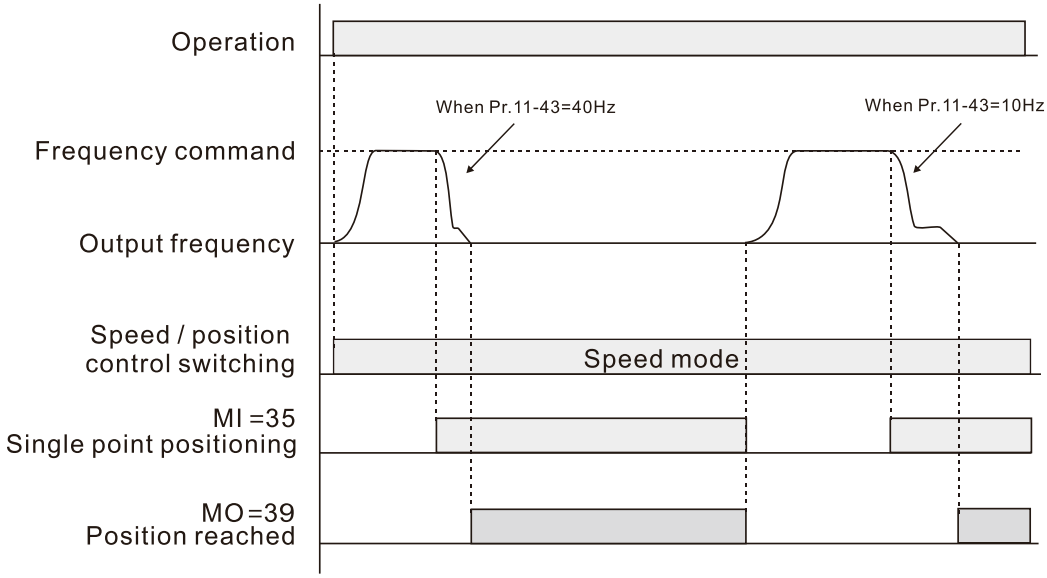

If the multi-function input terminal MIx = 89 (position / speed mode switch) is enabled under the speed mode, the drive refers to Pr.11-43 settings when executing the pulse-train positioning position control, as shown in the diagram below.

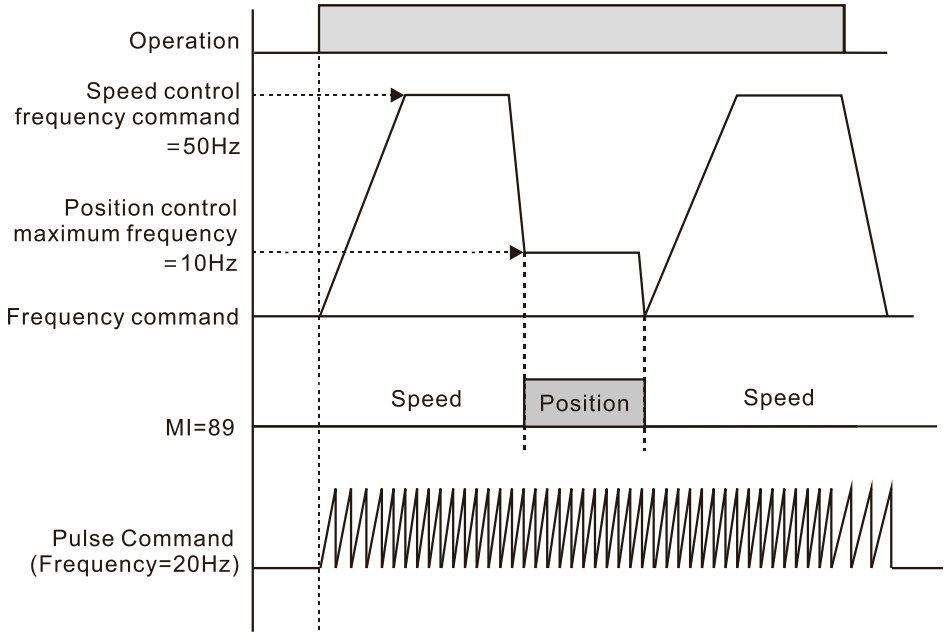

When Pr.11-00 bit8 = 0 and the drive is in multi-step positioning position control mode, the speed for each movement among positions also refers Pr.11-43 settings.

11-44 Position Control Acceleration Time

Default: 1.00

Settings 0.00–655.35 sec.

11-45 Position Control Deceleration Time

Default: 1.00

Settings 0.00–655.35 sec.

Pr.11-44 sets the required time when the drive accelerates from 0.00 Hz to Pr.11-43 (Maximum Frequency for Position Control). Pr.11-45 sets the required time when the drive decelerates from Pr.11-43 (Maximum Frequency for Position Control) to 0.00 Hz

The acceleration and deceleration time for position control is invalid for pulse-train position command.

The acceleration and deceleration time for multi-step positioning position control is equal to Pr.11-44 and Pr.11-45.

11-46 Torque Output Filter Gain

Default: 0.050

Settings 0.000–65.535

Sets the filter gain of the torque output display (keypad display and communication read), including Pr.00-04 = 8 displays the output torque (%) that the drive calculates, the output torque (XXX.X %) of communication address 210B and the positive / negative output torque (%) that 2208 drive calculates (XXX.X %).

11-49 Inertia Estimation Filter Time

Default: 3

Settings 0–65535 sec.

This parameter determines the filter time for Pr.11-00 bit1 = 1 inertia estimation.

11-50 APR S-curve Time

Default: 0.300

Settings 0.000–1.000 sec.

- Only valid when MIx = 35 (enable single-point positioning) is enabled. The longer the Pr.11-50 time, the longer the positioning takes.
- Smooths the position command in single-point positioning position control mode, especially the application for the operation of mechanical structure. When load inertia increases, the inertia generated by the motor in the process of stopping also increases, further worsening the smoothness of operation. In this case, increase Pr.11-50 to the elevate smoothness.
- If the multi-function input terminal MIx = 35 (enable single-point positioning) is enabled under the speed mode, the drive refers to Pr.11-50 settings when executing the single-point positioning. Refer to the diagram below when Pr.11-50 is set to 1 and 0.3 second respectively.

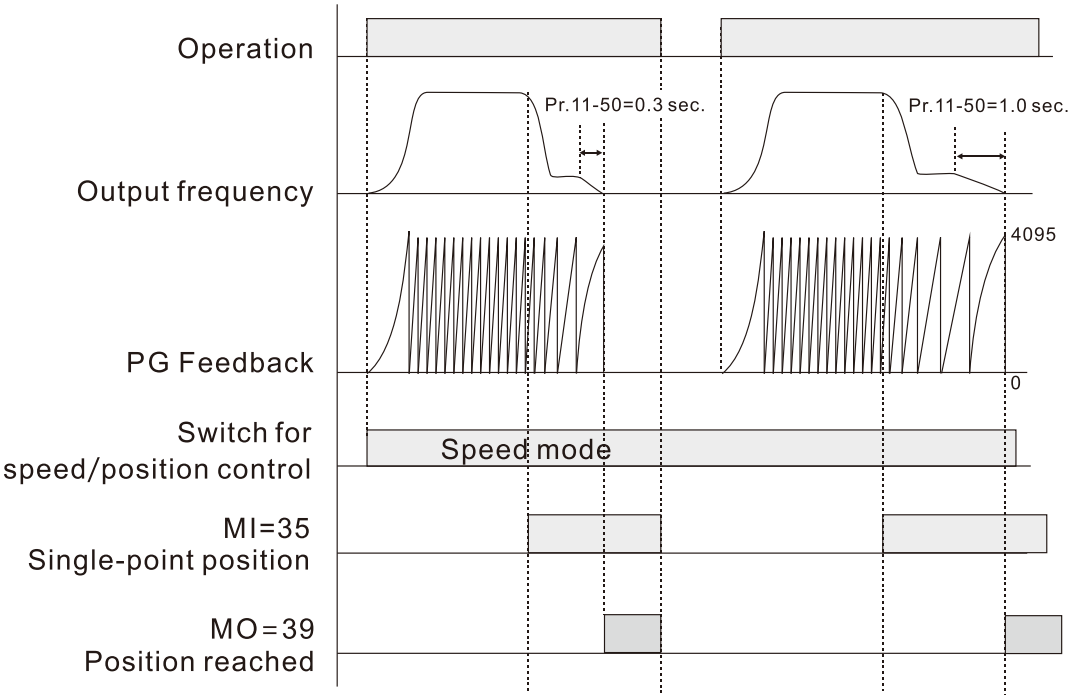

11-51 Maximum Allowable Position Error

Default: 1000

Settings 0–65535

- Defines the maximum error between the allowed position command and the actual position feedback when the drive is in the position control mode.

11-52 Allowable Position Error Range

Default: 10

Settings 0–65535 pulse

11-53 Allowable Position Error Cumulative Time

Default: 0.500

Settings 0.000–65.535 sec.

- When the position error is smaller than or equal to the allowed position error tolerance, and exceeds Pr.11-53 setting time, MOx = 39 (position reached) outputs.

If the position error is larger than the allowed position error tolerance, the drive waits until the position error is smaller than or equal to the allowed tolerance and until Pr.11-53 setting time arrives, MOx = 39 outputs.

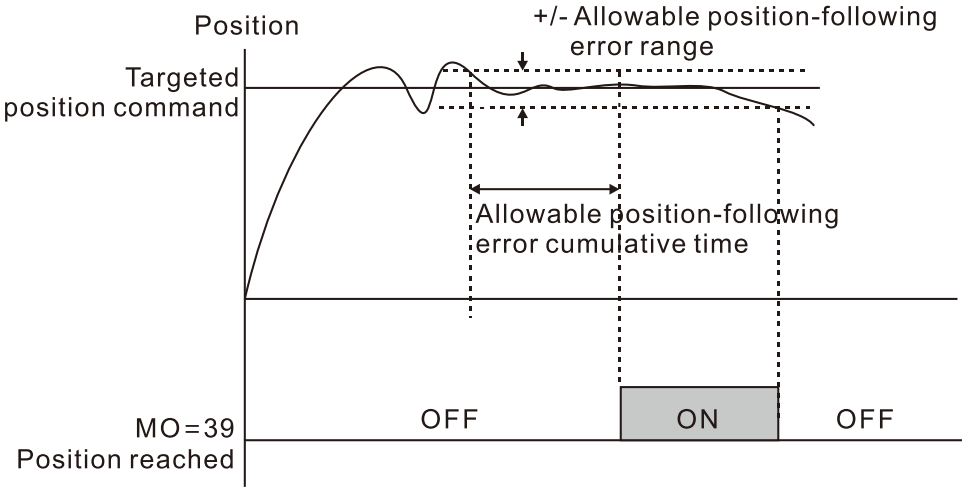

11-54 Treatment to the Large Position Control Error

Default: 0

Settings 0: Warn and continue operation (display oPE on keypad)
1: Fault and ramp to stop (display oPEE on keypad)
2: Fault and coast to stop (display oPEE on keypad)

If the position error is larger than the maximum allowed position error, the drive acts according to Pr.11-54 settings.

11-56 Software Positive Limit (High Word)

Default: 30000

Settings -32768–32767

11-57 Software Positive Limit (Low Word)

Default: 0

Settings 0–65535

11-58 Software Negative Limit (High Word)

Default: -30000

Settings -32768–32767

11-59 Software Negative Limit (Low Word)

Default: 0

Settings 0–65535

When in position control mode, if the motor moves in the forward direction and the position command exceeds Pr.11-56 and Pr.11-57 setting values, the drive stops quickly and the warning code SPL occurs.

When in position control mode, if the motor moves in the reverse direction and the position command exceeds Pr.11-58 and Pr.11-59 setting values, the drive stops quickly and the warning code SnL occurs.

This function is valid when Pr.11-60 bit2 = 1 under position control mode.

11-60 Position Control Bit

Default: 000Ah

Settings bit0: Enable position memory function
bit1: The pulse per revolution at load side counts by ppr
bit2: Enable software limit function
bit5: Action after Homing completed
bit8: Operation direction definition
bit9: Speed unit selection
bit10: Speed unit selection
bit11: Speed unit multiple
bit12: Absolute encoder is configured for incremental encoder application
bit13: APR feed forward gain changes as the control mode switches

<table>
<tr><th>Pr.11-60</th><th>Setting</th><th>Description</th></tr>
<tr><td>bit 0</td><td>Position memory function is enabled</td><td>bit0 = 0: Position memory function is disabled
bit0 = 1: Position memory function is enabled</td></tr>
<tr><td>bit 1</td><td>Single revolution at the load side is calculated by PPR</td><td>bit1 = 0: Calculate the single revolution at the load is by the Z-phase signal.
bit1 = 1: Calculate the single revolution at the load side by PPR.</td></tr>
<tr><td>bit 2</td><td>Software limit switch function is enabled</td><td>bit2 = 1: Software limit switch function is enabled when the drive is in multi-step positioning and pulse-train positioning position control modes
bit2 = 0: Software limit switch function is disabled when the drive is in multi-step positioning and pulse-train positioning position control modes</td></tr>
<tr><td>bit 5</td><td>Action after Homing completed</td><td>bit5 = 0: To run and stop in a reverse direction at Home position after Homing function has passed through the origin point.
bit5 = 1: When Homing function has passed through the origin point, the drive starts to decelerate in the same operation direction.</td></tr>
<tr><td>bit 8</td><td>Operation direction definition</td><td>bit8 = 0: Defines counterclockwise as forward direction
bit8 = 1: Defines clockwise as forward direction</td></tr>
<tr><td>bit 9, 10</td><td>Speed unit selection of the 0x606C of communication object</td><td><table><tr><th></th><th>bit 10</th><th>bit 9</th></tr><tr><td>1 rpm</td><td>0</td><td>0</td></tr><tr><td>0.01 Hz</td><td>0</td><td>1</td></tr><tr><td>1 pulse/sec</td><td>1</td><td>0</td></tr><tr><td>Reserve</td><td>1</td><td>1</td></tr></table></td></tr>
<tr><td>bit 11</td><td>Speed unit multiple of the 0x606C of communication object</td><td>bit11 = 0: unit times 1
bit11 = 1: unit times 0.1</td></tr>
</table>

Pr.11-60	Setting	Description
12	Absolute encoder is configured for incremental encoder application	bit12 = 0, Absolute encoder application bit12 = 1, Incremental encoder application
14	APR feed forward gain changes as the control mode switches	bit14 = 0, when speed mode switches to position mode, Pr.11-25 APR feed forward gain automatically switches to 100. bit14 = 1, when speed mode switches to position mode, Pr.11-25 APR feed forward gain remains the setting value.

Control modes for Pr.11-60 bit2 and bit3 settings:

Motor	Induction Motor (IM)						
Control Mode	VF	VFPG	SVC	FOCPG	FOC	TQCPG	TQC
bit2: SW limit switch function enabled	N/A	N/A	N/A	Warning displays	N/A	Warning displays	N/A
bit3: HW limit switch function enabled	Error displays	Error displays	Error displays	Warning displays	Error displays	Warning displays	Error displays

Motor	Permanent Magnet Synchronous Motor (PM)					Synchronous Reluctance Motor (SynRM)
Control Mode	PM SVC	FOCPG PM	PM FOC	HFI	PM TQCPG	
bit2: SW limit switch function enabled	N/A	Warning displays	N/A	N/A	Warning displays	N/A
bit3: HW limit switch function enabled	Error displays	Warning displays	Error displays	Error displays	Warning displays	Error displays

Positioning Method	Single-point	Pulse-train	Homing	P2P
bit2: SW limit switch function enabled	N/A	Warning displays	N/A	Warning displays
bit3: HW limit switch function enabled	N/A	Warning displays	Warning displays	Warning displays

The position memory function is available for coordinate system that remains at the mechanical origin after the drive's power-off when using incremental encoder.
For example, if the motor stops at the absolute position 100000 before power-off, then the motor's initial position remains at 100000 and homing has been completed after the drive is powered on again. With the position memory function, you do not need to do the homing again. It is time-saving and more efficient.

The position memory function is valid only when the homing has been completed. Any incomplete homing cannot work with this function.

The position memory function only works with motor that has braking mechanism. If you move the motor by hands or by other methods when the drive is powered off, the saved origin will be different from the actual origin after power resumes because the drive cannot realize the moving distance during power-off, further causing a risk of collision when executing position commands.

When Pr.11-60 bit1 = 0, the single-turn pulse number refers to encoder's Z-phase signal. But the

communication type encoder does not have Z-phase signal, which makes the setting bit1 = 0 unable to position.

- When using a communication absolute encoder, force Pr.11-60 bit1 = 1 to calculate the single-turn revolution at the load side by PPR, and to ensure the single-point positioning function is normal.
- If you need to use the hardware limitation function, enable the MIx = 44 (Negative limit switch) or MIx = 45 (Positive limit switch).
- Condition to use Pr.11-60 bit8 (Operation direction definition):
  1. The position, speed and torque command source are all from CANopen.
  2. The position, speed and torque command source are communication card, and the communication decoding method is CiA402 or Delta defines 60xx.
- Pr.11-60 bit8 (Operation direction definition) is valid after reboot the power.

11-62 Encoder at Load Side ppr Number (High byte)

Default: 0

11-63 Encoder at Load Side ppr Number (Low byte)

Default: 2400

Settings 0–65535

- When the encoder is installed at the motor side and the Z-phase is installed at the load side, you must set the PPR number at the load side to ensure the actual number of pulses per revolution because the pulse number for single revolution relates to the mechanical gear ratio and encoder PPR.

  Example:

  Assume that the mechanical gear ratio of the motor side to the load side is 10:1 (motor's 10 revolutions = load's 1 revolution) and Pr.10-01 = 1024:
  - If you are to position at the load side at 0 degree, set Pr.11-62 = 0 and Pr.11-63 = 10240 [=1024 × 10]
  - If you are to position at the load side at 270 degrees, set Pr.11-65 = 0 and Pr.11-66 = 7680 [=10240 × 3/4].
- Pr.11-63 and Pr.11-66 change with Pr.10-01 setting values. For example, set Pr.10-01 = 600, Pr.11-63 = 2400, and Pr.11-66 = 0–2399. Then, when you change Pr.10-01 to 1024, Pr.11-63 automatically changes to 4096, and Pr.11-66 setting range changes to 0–4095.

11-64 Single-point Positioning Rising Speed

Default: 10.00

Settings 0.10–according to the settings for Pr.11-43 and Pr.11-45

- When you perform a single-point positioning function, decelerate the system to Pr.11-64 setting speed before positioning.
- The setting range for single-point positioning rising speed is calculated according to the setting of Pr.11-43 (Position control maximum frequency) and Pr.11-45 (Position control deceleration time).

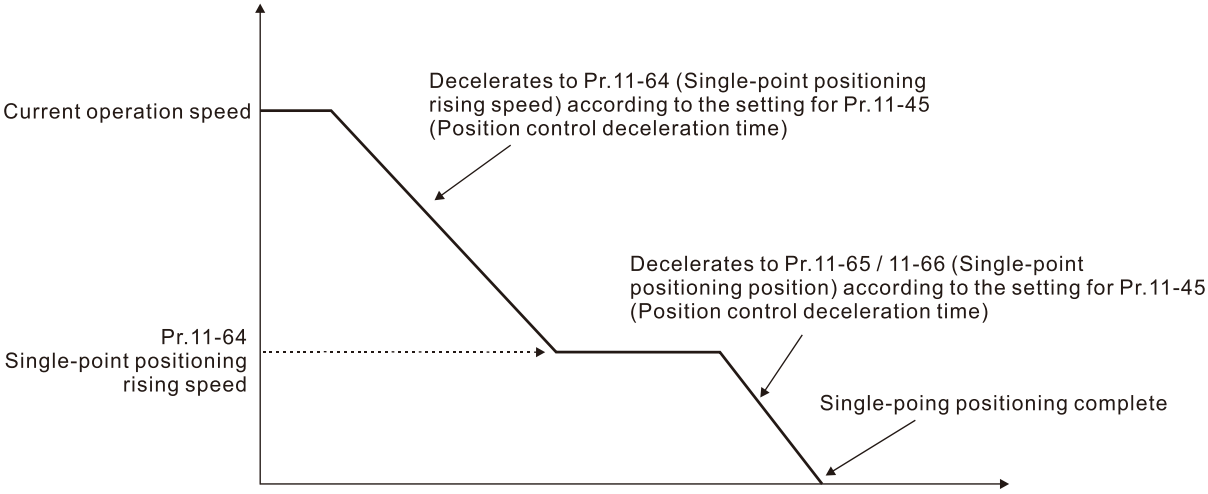

11-65 Single-point Positioning Position (High byte)

Default: 0

11-66 Single-point Positioning Position (Low byte)

Default: 0

Settings 0–the upper limit of ppr at load side

- Defines the position of single-point positioning. Only valid for the coordinate system that uses accumulated single revolution for the motor encoder.
- The coordinate system that uses accumulated single revolution for the motor encoder is established through the Z-phase signal. Without the Z-phase signal, such coordinate system cannot be established normally even though the drive is powered on.
- Needs to use with the multi-function input terminal MIx = 35 (Enable single-point positioning)
- When the single-point positioning position is set to 0, it is equal to the Z-phase position of the encoder.
- Single-point positioning position = Pr.11-65 × 65535 + Pr.11-66. And the maximum setting value is the number of pulses per revolution at the load side (Pr.11-62 and Pr.11-63).
- When the motor starts and runs at zero speed, and MIx = 35 (Enable single-point positioning) is active (level-triggered), the motor immediately moves to the single-point positioning position according to the current operation direction, as shown in the diagram below.

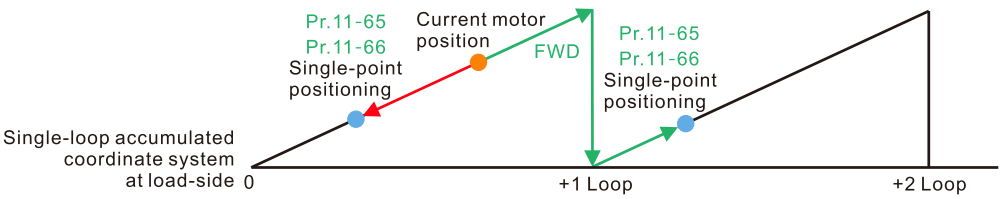

- When the motor starts and runs at constant speed, and MIx = 35 (Enable single-point positioning) is active (level-triggered), the motor starts to move and stop at the single-point positioning position according to the current speed and operation direction, as shown in the diagram below. The moving number of revolutions depends on the current moving speed.

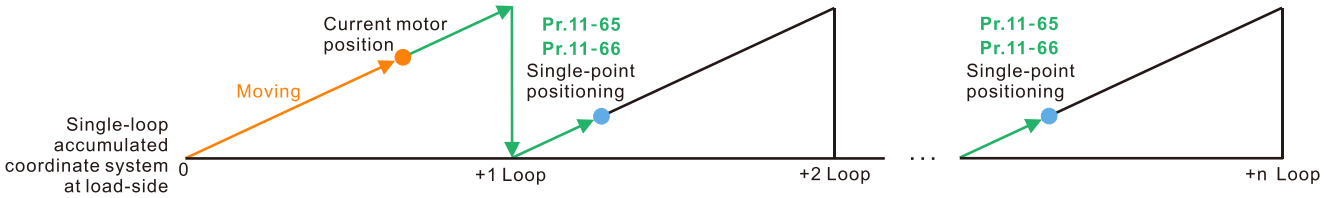

- When executing the single-point positioning, the moving distance will not be larger than one revolution if the drive has finished establishing the single revolution coordinate system.
- In the process of motor's operation and drive's executing single-point positioning, if MIx = 35 (Enable single-point positioning) is inactive, then the drive's single-point positioning function is disabled. If the drive was in speed mode before executing single-point positioning, the drive starts to accelerate to the operating speed.
- For example, assume that Pr.11-65 = 1 and Pr.11-66 = 64464, then the single-point positioning position = 130000 [=1 × 65536+64464]. To position at 130000, if the current position of the load is at 0, and the motor PPR is 1024, then the actual number of pulses for the motor is 126 revolutions and 976 pulses [=130000 ÷ 1024].

11-68 Homing Method

Default: 0008h

Settings 0000h–0128h

- Used for establishing the coordinate system that uses accumulated multiple revolution for the motor encoder.
- How to set Pr.11-68:

  Example:

  - Set Pr.11-68 = 012h when using homing method 4
  - Set Pr.11-68 = 116h when using homing method 10.

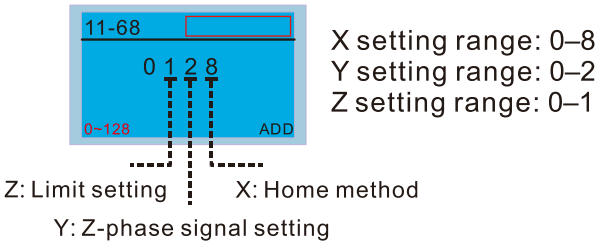

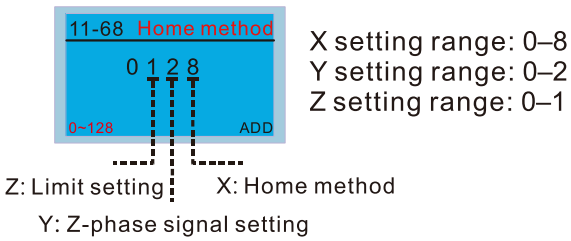

- Setting and description of homing parameter design (XYZ):

Z	Y	X
Home Limit	Z-phase Signal Setting	Homing Mode
0–1	0–2	0–8
-	Y = 0: Reverse the direction to locate the Z-phase signal Y = 1: Continue to locate the Z-phase signal in the same direction Y = 2: Do not locate the Z-phase signal	0: Execute homing position control in the forward direction. Use the positive limit switch as the homing reference point.
		1: Execute homing position control in the reverse direction. Use the negative limit switch as the homing reference point.
When home limit is reached: Z=0: error is displayed Z=1: the direction is reversed		2: Execute homing position control in the forward direction. Use the ORG switch (from 0 to 1) as the homing reference point.
		3: Execute homing position control in the reverse direction. Use the ORG switch (from 0 to 1) as the homing reference point.
	-	4: Locate the Z-phase signal in the forward

		direction and use the Z-phase signal as homing.
		5: Locate the Z-phase signal in the reverse direction and use the Z-phase signal as homing.
	Y = 0: Reverse the direction to locate the Z-phase signal Y = 1: Continue to locate the Z-phase signal in the same direction Y = 2: Do not locate the Z-phase signal	6: Execute homing position control in the forward direction. Use the ORG switch (from 1 to 0) as the homing reference point.
		7: Execute homing position control in the reverse position. Use the ORG switch (from 1 to 0) as the homing reference point.
-	-	8: Use the current position as the origin.

NOTE:
Forward direction means running in the clockwise (CW) direction; reverse direction means running in the counterclockwise (CCW) direction.

📖 You can use Pr.11-43, Pr.11-68–Pr.11-74 and MIx = 47 (enable the homing function) to execute homing position control.

📖 The correspondence between XYZ and CiA402 for homing mode selection:

CiA402 Object 0x6098H	Z	Y	X	Function Description
Homing Method	Home Limit	Z-phase Signal Setting	Homing Mode	
1	-	0	1	Execute homing position control in the reverse direction until encountering the negative limit switch. Then, the direction is reversed to locate the Z-phase signal as the origin.
2	-	0	0	Execute homing position control in the forward direction until encountering the positive limit switch. Then, the direction is reversed to locate the Z-phase signal as the origin.
3	0	0	2	Execute homing position control in the forward direction until encountering the ORG switch (from 0 to 1). Then, the direction is reversed to locate the Z-phase signal as the origin. Stops when encountering the positive limit switch.
4	0	1	2	Execute homing position control in the forward direction until encountering the ORG switch (from 0 to 1). Then, continue locating the Z-phase signal in the same direction as the origin. Stops when encountering the positive limit switch.
5	0	0	3	Execute homing position control in the reverse direction until encountering the ORG switch (from 0 to 1). Then, the direction is reversed to locate the Z-phase signal as the origin. Stops when encountering the negative limit switch.
6	0	1	3	Execute homing position control in the reverse direction until encountering the ORG switch (from 0 to 1). Then, continue locating the Z-phase signal in the same direction as the origin. Stops when encountering the negative limit switch.
7	1	0	2	Execute homing position control in the forward direction until encountering the ORG switch (from 0 to 1). Then, the direction is reversed to locate the Z-phase signal as the origin. When encountering the positive limit switch, the direction is reversed

CiA402 Object 0x6098H	Z	Y	X	Function Description
Homing Method	Home Limit	Z-phase Signal Setting	Homing Mode	
				to locate the origin.
8	1	1	2	Execute homing position control in the forward direction until encountering the ORG switch (from 0 to 1). Then, continue locating the Z-phase signal in the same direction as the origin. When encountering the positive limit switch, the direction is reversed to locate the origin.
9	1	0	6	Execute homing position control in the forward direction until encountering the ORG switch (from 1 to 0). Then, the direction is reversed to locate the Z-phase signal as the origin. When encountering the positive limit switch, the direction is reversed to locate the origin.
10	1	1	6	Execute homing position control in the forward direction until encountering the ORG switch (from 1 to 0). Then, continue locating the Z-phase signal in the same direction as the origin. When encountering the positive limit switch, the direction is reversed to locate the origin.
11	1	0	3	Execute homing position control in the reverse direction until encountering the ORG switch (from 0 to 1). Then, the direction is reversed to locate the Z-phase signal as the origin. When encountering the negative limit switch, the direction is reversed to locate the origin.
12	1	1	3	Execute homing position control in the reverse direction until encountering the ORG switch (from 0 to 1). Then, continue locating the Z-phase signal in the same direction as the origin. When encountering the negative limit switch, the direction is reversed to locate the origin.
13	1	0	7	Execute homing position control in the reverse direction until encountering the ORG switch (from 1 to 0). Then, the direction is reversed to locate the Z-phase signal as the origin. When encountering the negative limit switch, the direction is reversed to locate the origin.
14	1	1	7	Execute homing position control in the reverse direction until encountering the ORG switch (from 1 to 0). Then, continue locating the Z-phase signal in the same direction as the origin. When encountering the negative limit switch, the direction is reversed to locate the origin.
15	Reserved			Reserved
16	Reserved			Reserved
17	-	2	1	Execute homing position control in the reverse direction and use the negative limit switch as the origin.
18	-	2	0	Execute homing position control in the forward direction and use the positive limit switch as the origin.
19	No correspondence			See the diagram for homing method 19
20	0	2	2	Execute homing position control in the forward direction and use the ORG switch signal (from 0 to 1) as the origin. Stops when

CiA402 Object 0x6098H	Z	Y	X	Function Description
Homing Method	Home Limit	Z-phase Signal Setting	Homing Mode	
				encountering the positive limit switch.
21	No correspondence			See the diagram for homing method 21
22	0	2	3	Execute homing position control in the reverse direction and use the ORG switch signal (from 0 to 1) as the origin. Stops when encountering the negative limit switch.
23	No correspondence			See the diagram for homing method 23
24	1	2	2	Execute homing position control in the forward direction and use the ORG switch signal (from 0 to 1) as the origin. The direction is reversed to locate the origin when encountering the positive limit switch.
25	No correspondence			See the diagram for homing method 25
26	1	2	6	Execute homing position control in the forward direction and use the ORG switch signal (from 1 to 0) as the origin. The direction is reversed to locate the origin when encountering the positive limit switch.
27	No correspondence			See the diagram for homing method 27
28	1	2	3	Execute homing position control in the reverse direction and use the ORG switch signal (from 0 to 1) as the origin. The direction is reversed to locate the origin when encountering the negative limit switch.
29	No correspondence			See the diagram for homing method 29
30	1	2	7	Execute homing position control in the reverse direction and use the ORG switch signal (from 1 to 0) as the origin. The direction is reversed to locate the origin when encountering the negative limit switch.
31	Reserved			Reserved
32	Reserved			Reserved
33	0	-	5	Locate the Z-phase signal in the reverse direction and use the Z-phase signal as the origin. Stops when encountering the negative limit switch.
34	0	-	4	Locate the Z-phase signal in the forward direction and use the Z-phase signal as the origin. Stops when encountering the positive limit switch.
35	-	-	8	Use the current position as the origin.

📖 Homing methods 19, 21, 23, 25, 27, and 29 cannot be set through the digital keypad KPC-CC01. Set them through communications.

Execute homing position control in the forward direction until encountering the positive limit switch. Then, the direction is reversed to locate the Z-phase signal as the origin.

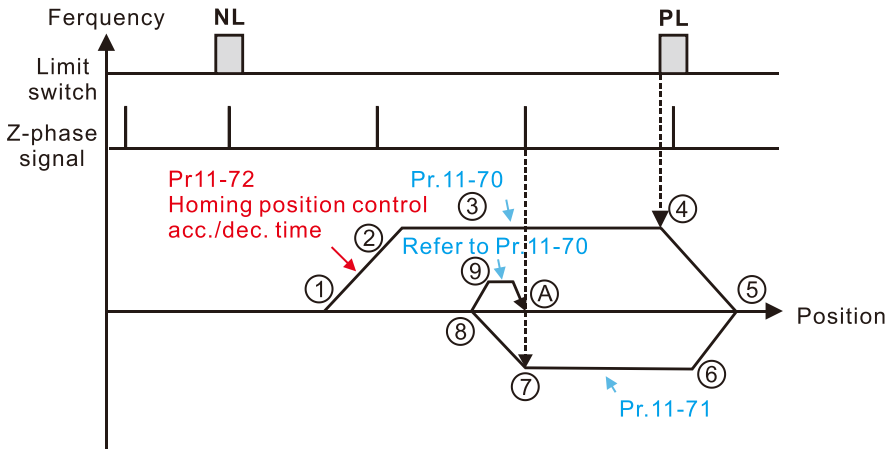

① FWD Run for execute Homing position control function.
② Accelerate to Pr.11-70 Homing position control 1st step speed according to Pr.11-72 Homing control acc./dec. time.
③ Operating with Pr.11-70 Homing position control 1st step speed.
④ Deceleration according to Pr.11-72 after encountering the rising edge of the PL.
⑤ Decelerate to 0Hz and change operating direction. After, accelerate to Pr.11-71 Homing control 2nd step speed according to Pr.11-72.
⑥ Operating with Pr.11-71 Homing control 2nd step speed.
⑦ Deceleration according to Pr.11-72 after encountering the Z-phase signal.
⑧ Decelerate to 0Hz and change operating directions for search Z-phase signal.
⑨ Refer to Pr.11-70 Homing position control 1st step speed and start to execute creep speed.
Ⓐ Positioning in Z-phase signal completed.

Execute homing position control in the reverse direction until encountering the negative limit switch. Then, the direction is reversed to locate the Z-phase signal as the origin.

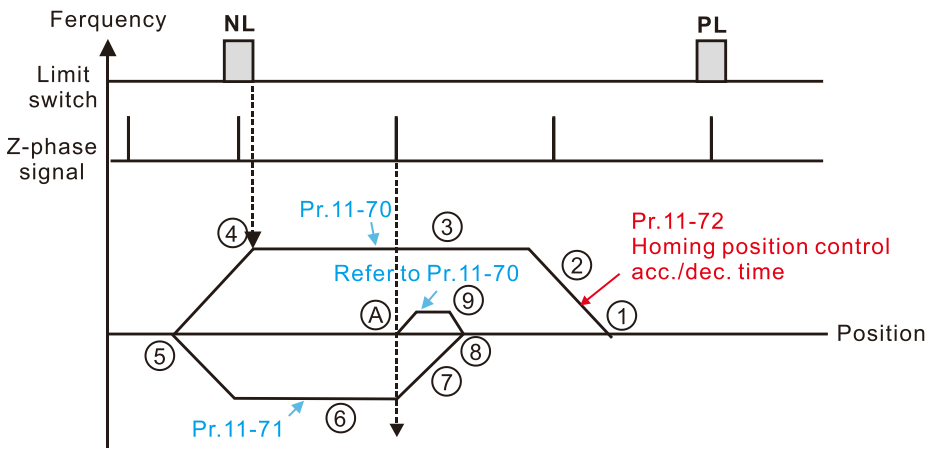

① REV Run for execute Homing position control function
② Accelerate to Pr.11-70 Homing position control 1st step speed according to Pr.11-72 Homing control acc./dec. time.
③ Operating with Pr.11-70 Homing position control 1st step speed
④ Deceleration according to Pr.11-72 after encountering the rising edge of the NL
⑤ Decelerate to 0Hz and change operating direction. After, accelerate to Pr.11-71 Homing control 2nd step speed according to Pr.11-72.
⑥ Operating with Pr.11-71 Homing control 2nd step speed
⑦ Deceleration according to Pr.11-72 after encountering the Z-phase signal
⑧ Decelerate to 0Hz and change operating directions for search Z-phase signal.
⑨ Refer to Pr.11-70 Homing position control 1st step speed and start to execute creep speed.
Ⓐ Positioning in Z-phase signal completed

Execute homing position control in the forward direction until encountering the ORG switch (from 0 to 1). Then, the direction is reversed to locate the Z-phase signal as the origin.

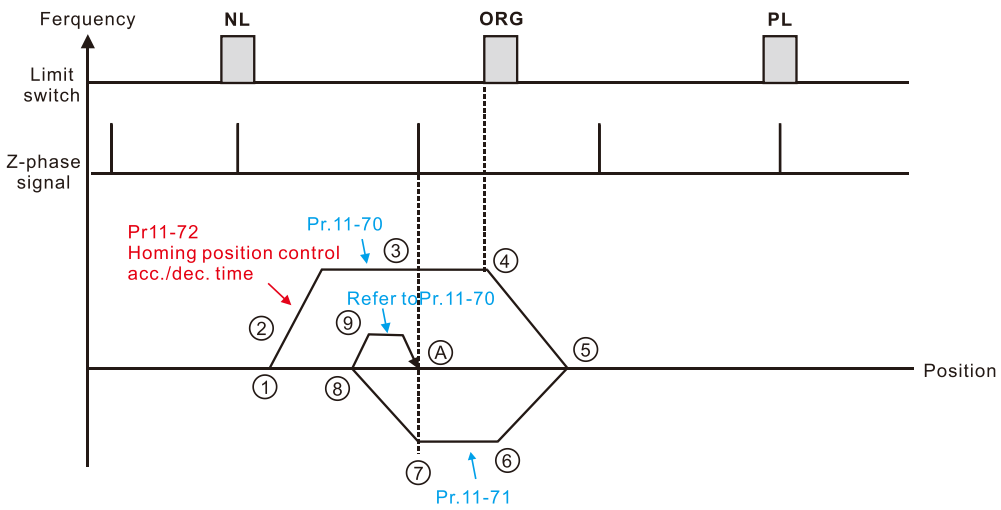

① FWD Run for execute Homing position control function.
② Accelerate to Pr.11-70 Homing position control 1st step speed according to Pr.11-72 Homing control acc./dec. time.
③ Operating with Pr.11-70 Homing position control 1st step speed.
④ Deceleration according to Pr.11-72 after encountering the ORG.
⑤ Decelerate to 0Hz and change operating direction. After, accelerate to Pr.11-71 Homing control 2nd step speed according to Pr.11-72.
⑥ Operating with Pr.11-71 Homing control 2nd step speed.
⑦ Deceleration according to Pr.11-72 after encountering the Z-phase signal.
⑧ Decelerate to 0Hz and change operating directions for search Z-phase signal.
⑨ Refer to Pr.11-70 Homing position control 1st step speed and start to execute creep speed.
Ⓐ Positioning in Z-phase signal completed.

Execute homing position control in the reverse direction until encountering the ORG switch (from 0 to 1). Then, the direction is reversed to locate the Z-phase signal as the origin.

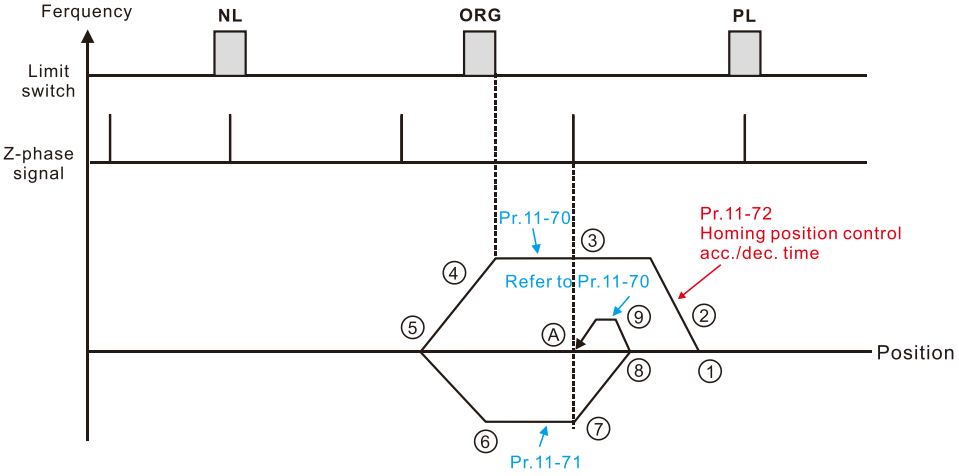

① REV Run for execute Homing position control function.
② Accelerate to Pr.11-70 Homing position control 1st step speed according to Pr.11-72 Homing control acc./dec. time.
③ Operating with Pr.11-70 Homing position control 1st step speed.
④ Deceleration according to Pr.11-72 after encountering the ORG.
⑤ Decelerate to 0Hz and change operating direction. After, accelerate to Pr.11-71 Homing control 2nd step speed according to Pr.11-72.
⑥ Operating with Pr.11-71 Homing control 2nd step speed.
⑦ Deceleration according to Pr.11-72 after encountering the Z-phase signal.
⑧ Decelerate to 0Hz and change operating directions for search Z-phase signal.
⑨ Refer to Pr.11-70 Homing position control 1st step speed and start to execute creep speed.
Ⓐ Positioning in Z-phase signal completed.

Execute homing position control in the forward direction until encountering the ORG switch (from 0 to 1). Then, continue locating the Z-phase signal in the same direction as the origin.

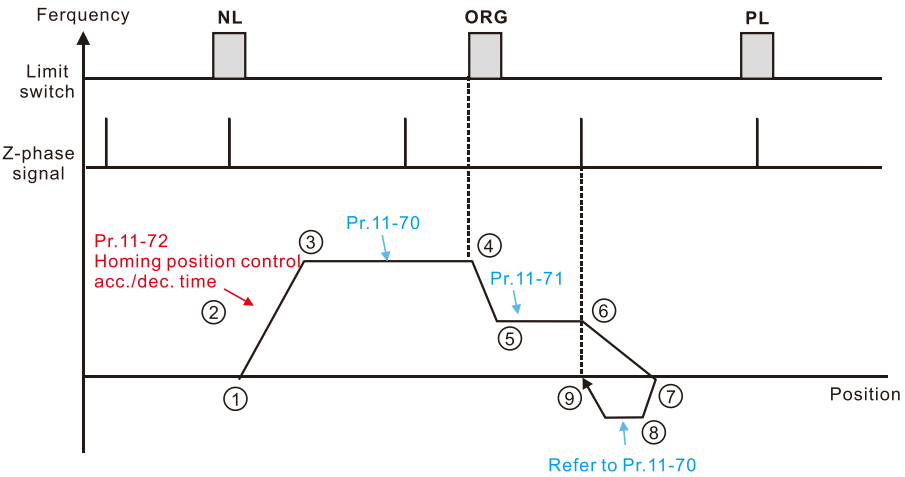

① FWD Run for execute Homing position control function.
② Accelerate to Pr.11-70 Homing position control 1st step speed according to Pr.11-72 Homing control acc./dec. time.
③ Operating with Pr.11-70 Homing position control 1st step speed.
④ Deceleration according to Pr.11-72 after encountering the rising edge of the ORG.
⑤ Decelerate to Pr.11-71 Homing control 2nd step speed.
⑥ Deceleration according to Pr.11-72 after encountering the Z-phase signal.
⑦ Decelerate to 0Hz and change operating directions for search Z-phase signal.
⑧ Refer to Pr.11-70 Homing position control 1st step speed and start to execute creep speed.
⑨ Positioning in Z-phase signal completed.

Execute homing position control in the reverse direction until encountering the ORG switch (from 0 to 1). Then, continue locating the Z-phase signal in the same direction as the origin.

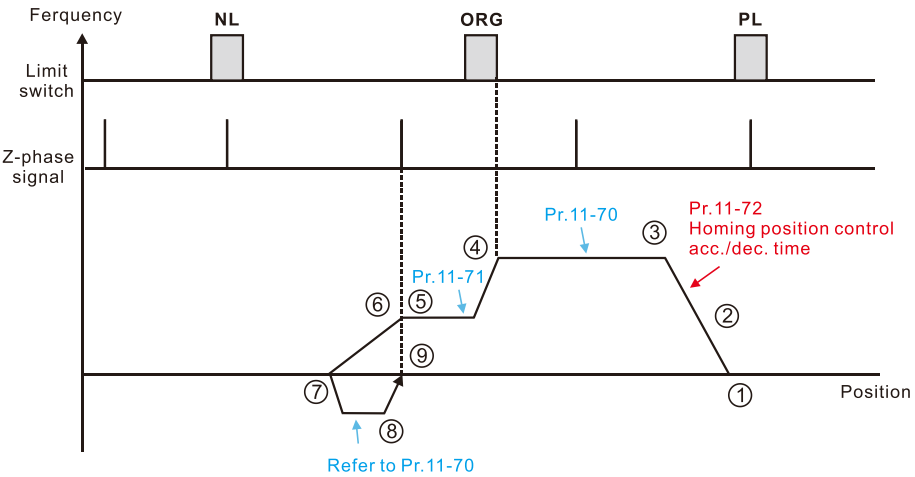

① REV Run for execute Homing position control function
② Accelerate to Pr.11-70 Homing position control 1st step speed according to Pr.11-72 Homing control acc./dec. time.
③ Operating with Pr.11-70 Homing position control 1st step speed
④ Deceleration according to Pr.11-72 after encountering the rising edge of the ORG
⑤ Decelerate to Pr.11-71 Homing control 2nd step speed.
⑥ Deceleration according to Pr.11-72 after encountering the Z-phase signal
⑦ Decelerate to 0Hz and change operating directions for search Z-phase signal.
⑧ Refer to Pr.11-70 Homing position control 1st step speed and start to execute creep speed.
⑨ Positioning in Z-phase signal completed

Locate the Z-phase signal in the forward direction and use the Z-phase signal as the origin.

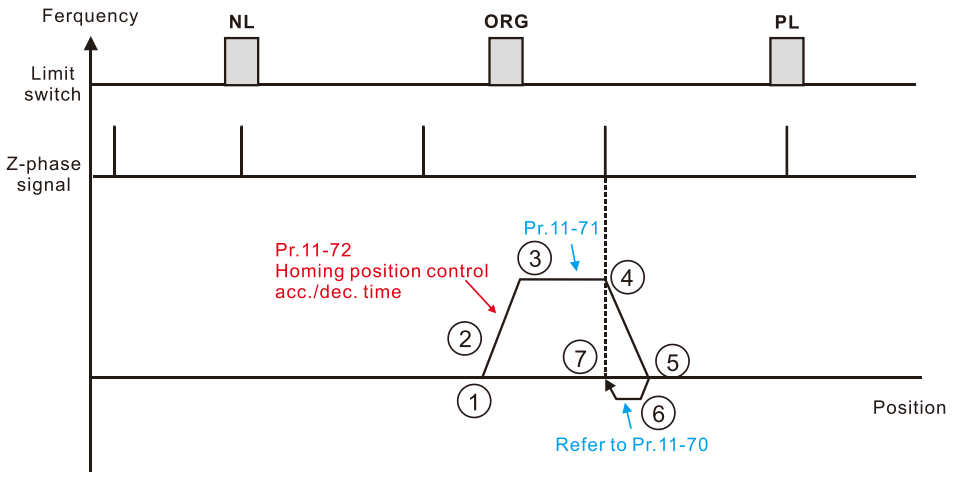

① FWD Run for execute Homing position control function.
② Accelerate to Pr.11-71 Homing position control 2nd step speed according to Pr.11-72 Homing control acc./dec. time.
③ Operating with Pr.11-71 Homing position control 2nd step speed.
④ Deceleration according to Pr.11-72 after encountering the Z-phase signal.
⑤ Decelerate to 0Hz and change operating directions for search Z-phase signal.
⑥ Refer to Pr.11-70 Homing position control 1st step speed and start to execute creep speed.
⑦ Positioning in Z-phase signal completed.

Locate the Z-phase signal in the reverse direction and use the Z-phase signal as the origin.

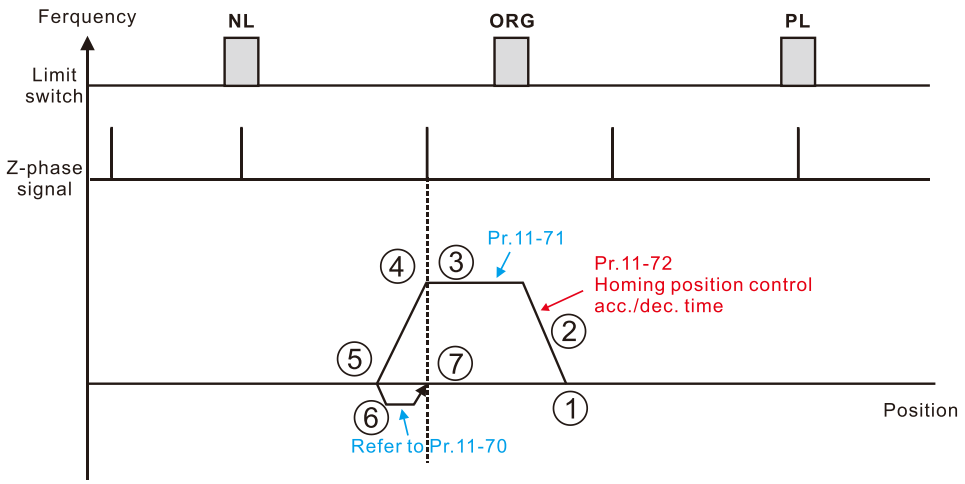

① REV Run for execute Homing position control function.
② Accelerate to Pr.11-71 Homing position control 2nd step speed according to Pr.11-72 Homing control acc./dec. time.
③ Operating with Pr.11-71 Homing position control 2nd step speed.
④ Deceleration according to Pr.11-72 after encountering the Z-phase signal.
⑤ Decelerate to 0Hz and change operating directions for search Z-phase signal.
⑥ Refer to Pr.11-70 Homing position control 1st step speed and start to execute creep speed.
⑦ Positioning in Z-phase signal completed.

Execute homing position control in the forward direction and use the positive limit switch or the ORG switch as the origin.

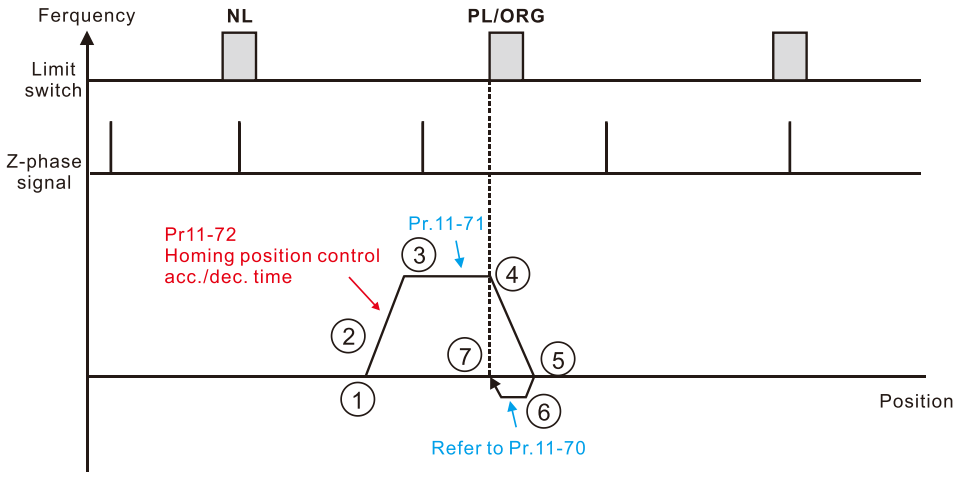

① FWD Run for execute Homing position control function.
② Accelerate to Pr.11-71 Homing position control 2nd step speed according to Pr.11-72 Homing control acc./dec. time.
③ Operating with Pr.11-71 Homing position control 2nd step speed.
④ Deceleration according to Pr.11-72 after encountering the rising edge of the PL/ORG.
⑤ Decelerate to 0Hz and change operating directions for search PL/ORGI.
⑥ Refer to Pr.11-70 Homing position control 1st step speed and start to execute creep speed.
⑦ Positioning in PL/ORG completed.

Execute homing position control in the reverse direction and use the negative limit switch or the ORG switch as the origin.

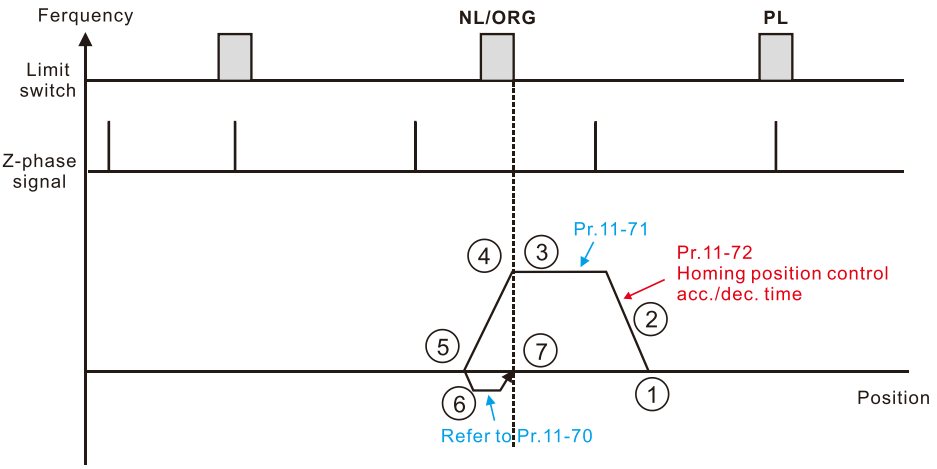

① REV Run for execute Homing position control function.
② Accelerate to Pr.11-71 Homing position control 2nd step speed according to Pr.11-72 Homing control acc./dec. time.
③ Operating with Pr.11-71 Homing position control 2nd step speed.
④ Deceleration according to Pr.11-72 after encountering the rising edge of the NL/ORG.
⑤ Decelerate to 0Hz and change operating directions for search NL/ORGI.
⑥ Refer to Pr.11-70 Homing position control 1st step speed and start to execute creep speed.
⑦ Positioning in NL/ORG completed.

Execute homing position control in the forward direction until encountering the positive limit switch. Then, the direction is reversed to locate the Z-phase signal as the origin.

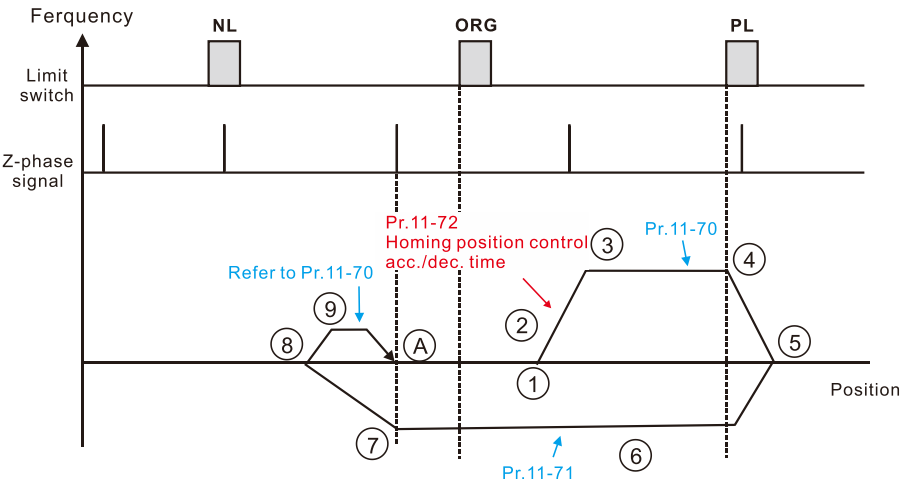

① FWD Run for execute Homing position control function.
② Accelerate to Pr.11-70 Homing position control 1st step speed according to Pr.11-72 Homing control acc./dec. time.
③ Operating with Pr.11-70 Homing position control 1st step speed.
④ Deceleration according to Pr.11-72 after encountering the PL.
⑤ Decelerate to 0Hz and change operating direction. After, accelerate to Pr.11-71 Homing control 2nd step speed according to Pr.11-72.
⑥ Operating with Pr.11-71 Homing control 2nd step speed.
⑦ Deceleration according to Pr.11-72 after encountering the Z-phase signal.
⑧ Decelerate to 0Hz and change operating directions for search Z-phase signal.
⑨ Refer to Pr.11-70 Homing position control 1st step speed and start to execute creep speed.
Ⓐ Positioning in Z-phase signal completed.

Execute homing position control in the reverse direction until encountering the negative limit switch. Then, the direction is reversed to locate the Z-phase signal as the origin.

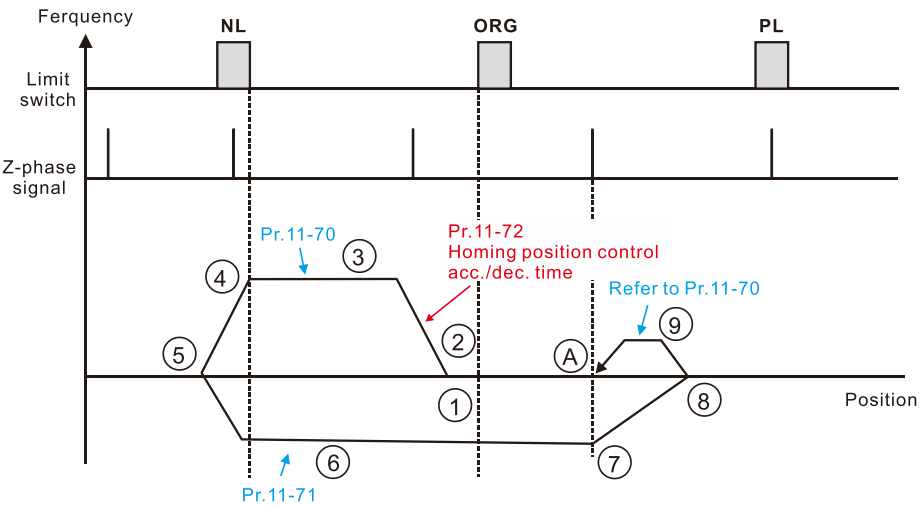

① REV Run for execute Homing position control function.
② Accelerate to Pr.11-70 Homing position control 1st step speed according to Pr.11-72 Homing control acc./dec. time.
③ Operating with Pr.11-70 Homing position control 1st step speed.
④ Deceleration according to Pr.11-72 after encountering the NL.
⑤ Decelerate to 0Hz and change operating direction. After, accelerate to Pr.11-71 Homing control 2nd step speed according to Pr.11-72.
⑥ Operating with Pr.11-71 Homing control 2nd step speed.
⑦ Deceleration according to Pr.11-72 after encountering the Z-phase signal.
⑧ Decelerate to 0Hz and change operating directions for search Z-phase signal.
⑨ Refer to Pr.11-70 Homing position control 1st step speed and start to execute creep speed.
Ⓐ Positioning in Z-phase signal completed.

Diagram 1

CiA402 Object 0x6098H	Z	Y	X	Function Description
Homing Method	Home Limit	Z-phase Signal Setting	Homing Mode	
1	-	0	1	Execute homing position control in the reverse direction until encountering the negative limit switch. Then, the direction is reversed to locate the Z-phase signal as the origin.

1. The initial movement is in the reverse direction.
2. When encountering the rising edge of the negative limit switch, the movement direction is reversed and waits for the falling-edge trigger of the negative limit switch.
3. Then, the movement locates the Z-phase signal in the forward direction and uses the Z-phase signal as the origin.

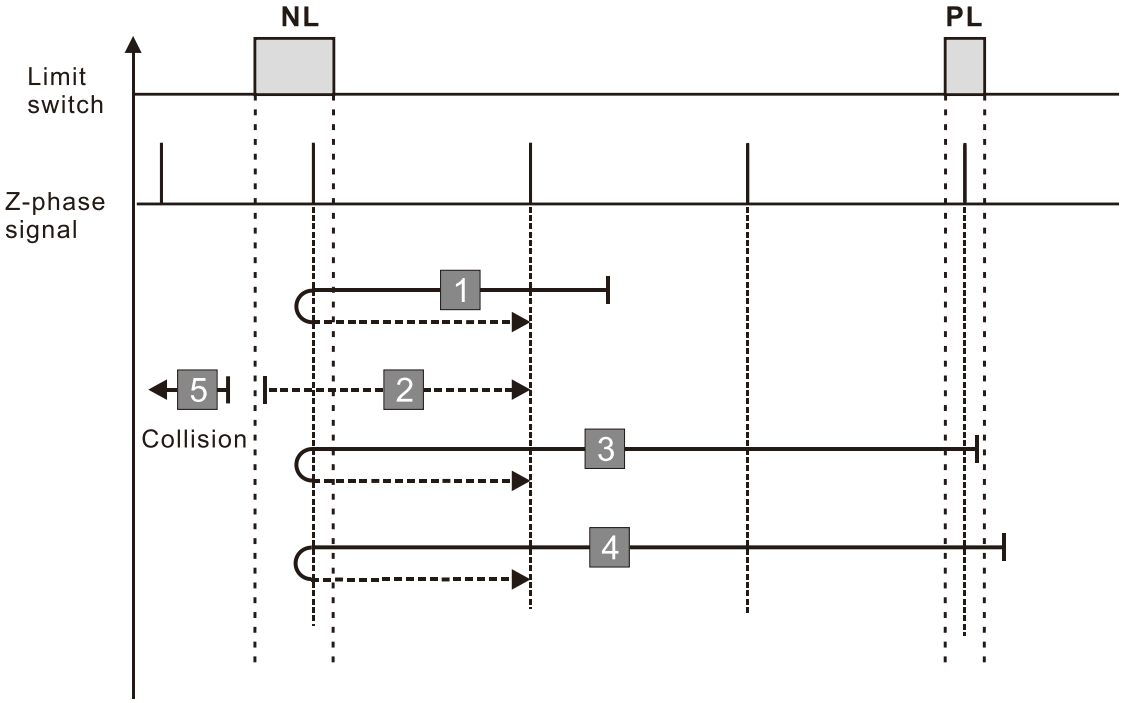

A homing failure occurs when the following conditions happen:

1. If the motor moves in the forward direction and encounters the positive limit switch signal, a homing failure occurs.
2. If no negative limit switch or Z-phase signal is encountered in the homing process mentioned above, and time-out is triggered, then a homing failure occurs.

Diagram 2

CiA402 Object 0x6098H	Z	Y	X	Function Description
Homing Method	Home Limit	Z-phase Signal Setting	Homing Mode	
2	-	0	0	Execute homing position control in the forward direction until encountering the positive limit switch. Then, the direction is reversed to locate the Z-phase signal as the origin.

1. The initial movement is in the forward direction.
2. When encountering the rising edge of the positive limit switch, the movement direction is reversed and waits for the falling-edge trigger of the positive limit switch.
3. Then, the movement locates the Z-phase signal in the reverse direction and uses the Z-phase signal as the origin.

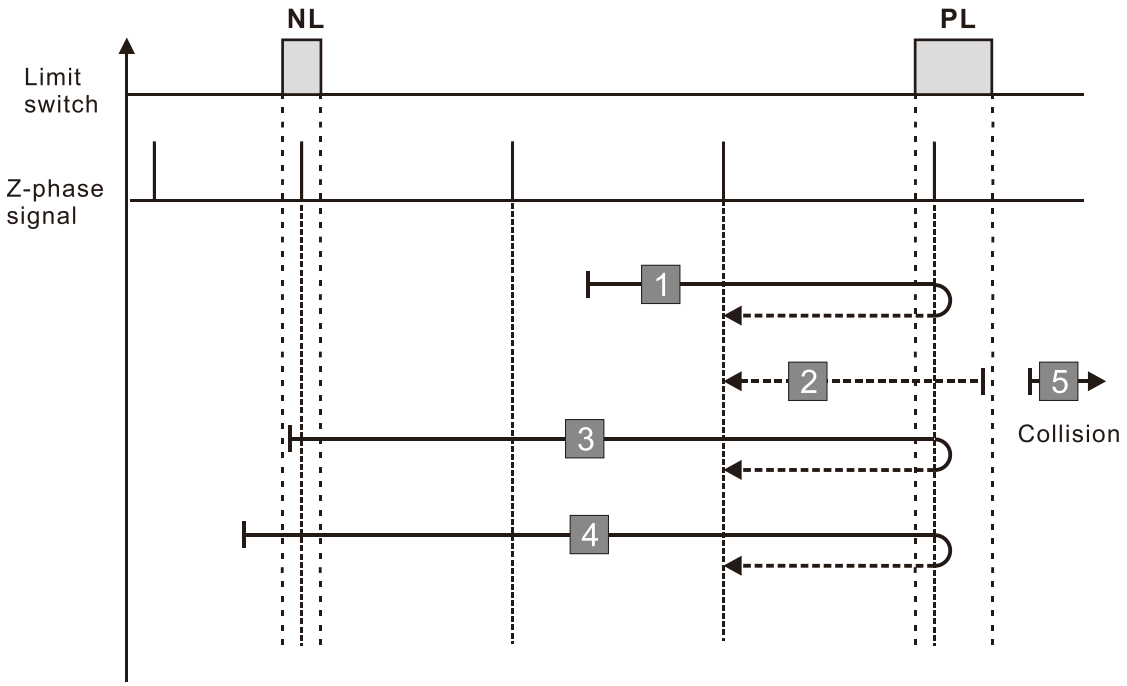

A homing failure occurs when the following conditions happen:

1. If the motor moves in the reverse direction and encounters the negative limit switch signal, a homing failure occurs.
2. If no positive limit switch or Z-phase signal is encountered in the homing process mentioned above, and time-out is triggered, then a homing failure occurs.

Diagram 3

CiA402 Object 0x6098H	Z	Y	X	Function Description
Homing Method	Home Limit	Z-phase Signal Setting	Homing Mode	
3	0	0	2	Execute homing position control in the forward direction until encountering the ORG switch (from 0 to 1). Then, the direction is reversed to locate the Z-phase signal as the origin. Stops when encountering the positive limit switch.

1. The initial movement direction depends on the ORG switch status. The initial movement is in the reverse direction if the ORG switch is active; the initial movement is in the forward direction if the ORG switch is inactive.
2. When moving in the forward direction and encountering the rising edge of the ORG switch, the movement direction is reversed and waits for the falling-edge trigger of the ORG switch.
3. Then, the movement locates the Z-phase signal in the reverse direction and uses the Z-phase signal as the origin.

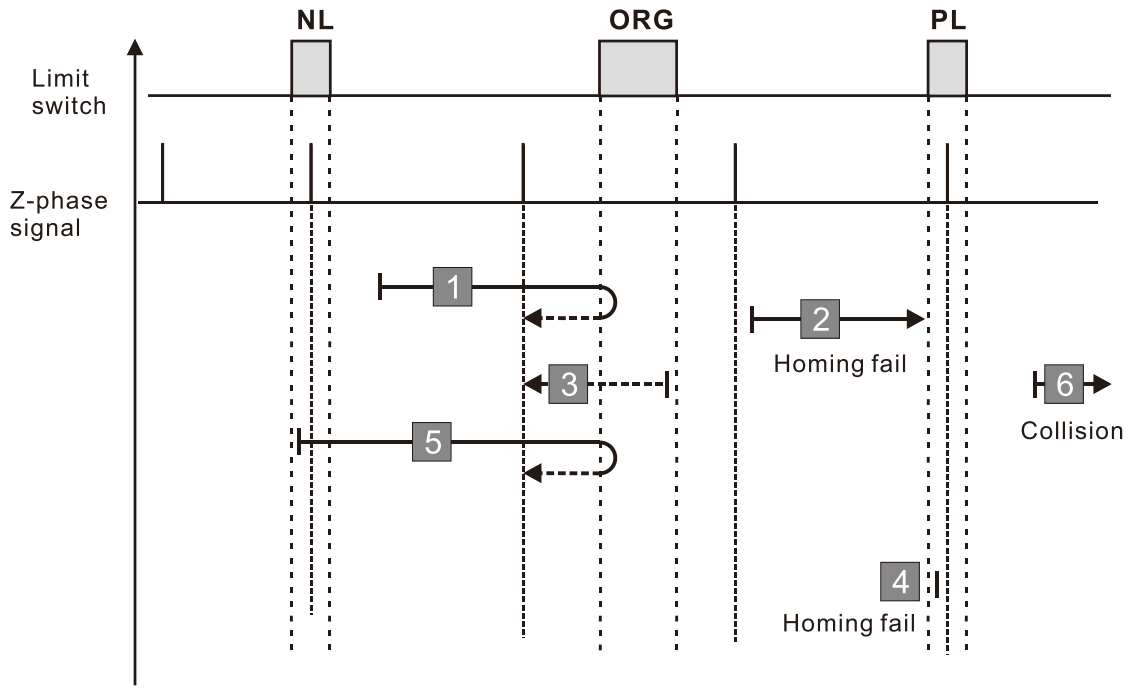

A homing failure occurs when the following conditions happen:

1. If the initial motor movement is in the forward direction and no falling edge of the ORG switch is encountered, a homing failure occurs.
2. If a positive or negative limit switch signal is encountered in the process of motor movement, a homing failure occurs.
3. If no ORG switch or Z-phase signal is encountered in the homing process mentioned above, and time-out is triggered, then a homing failure occurs.

Diagram 4

CiA402 Object 0x6098H	Z	Y	X	Function Description
Homing Method	Home Limit	Z-phase Signal Setting	Homing Mode	
4	0	1	2	Execute homing position control in the forward direction until encountering the ORG switch (from 0 to 1). Then, continue locating the Z-phase signal in the same direction as the origin. Stops when encountering the positive limit switch.

1. The initial movement direction depends on the ORG switch status. The initial movement is in the reverse direction if the ORG switch is active; the initial movement is in the forward direction if the ORG switch is inactive.
2. When moving in the reverser direction and encountering the falling edge of the ORG switch, the movement direction is reversed and waits for the rising-edge trigger of the ORG switch.
3. Then, the movement locates the Z-phase signal in the forward direction and uses the Z-phase signal as the origin.

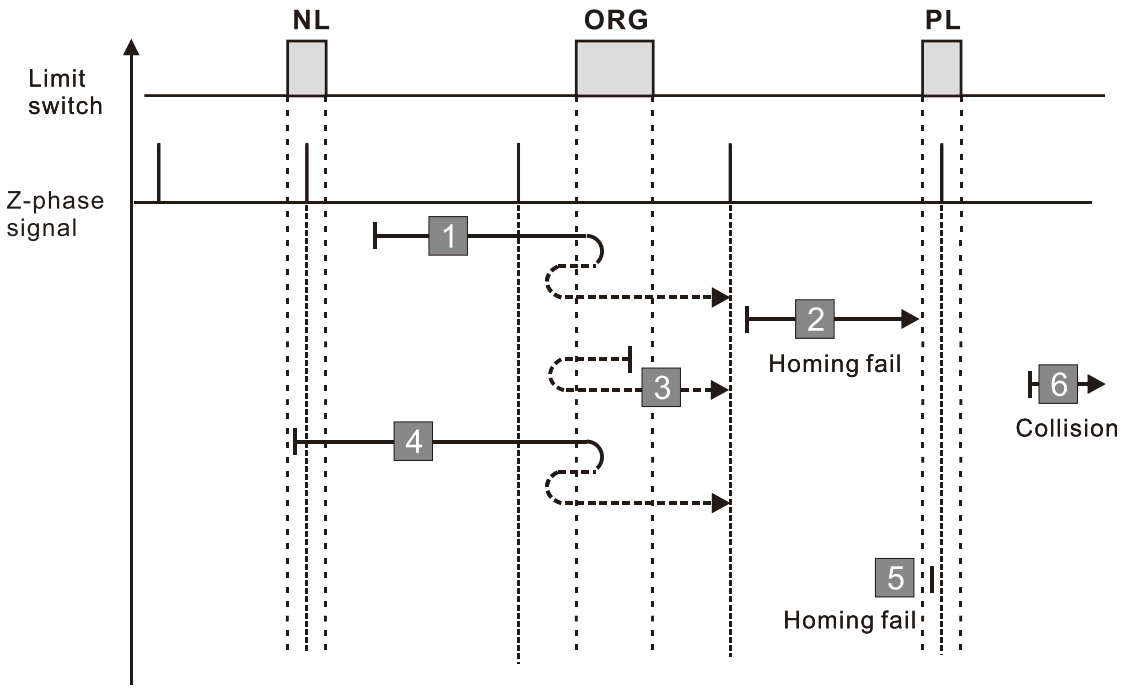

A homing failure occurs when the following conditions happen:

1. If the initial motor movement is in the reverse direction and no falling edge of the ORG switch is encountered, a homing failure occurs.
2. If a positive or negative limit switch signal is encountered in the process of motor movement, a homing failure occurs.
3. If no ORG switch or Z-phase signal is encountered in the homing process mentioned above, and time-out is triggered, then a homing failure occurs.

Diagram 5

CiA402 Object 0x6098H	Z	Y	X	Function Description
Homing Method	Home Limit	Z-phase Signal Setting	Homing Mode	
5	0	0	3	Execute homing position control in the reverse direction until encountering the ORG switch (from 0 to 1). Then, the direction is reversed to locate the Z-phase signal as the origin. Stops when encountering the negative limit switch.

1. The initial movement direction depends on the ORG switch status. The initial movement is in the forward direction if the ORG switch is active; the initial movement is in the reverse direction if the ORG switch is inactive.
2. When moving in the reverse direction and encountering the rising edge of the ORG switch, the movement direction is reversed and waits for the falling-edge trigger of the ORG switch.
3. Then, the movement locates the Z-phase signal in the forward direction and uses the Z-phase signal as the origin.

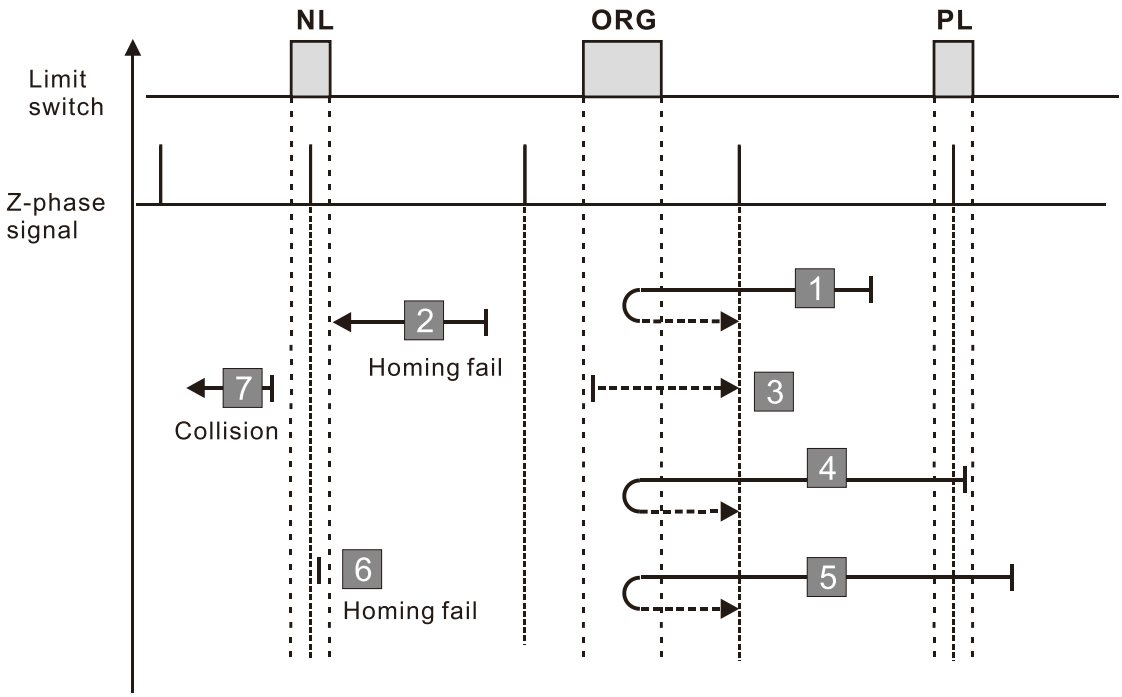

A homing failure occurs when the following conditions happen:

1. If the motor starts the movement in the reverse direction and no rising edge of the ORG switch is encountered, a homing failure occurs.
2. If a positive or negative limit switch signal is encountered in the process of motor movement, a homing failure occurs.
3. If no ORG switch or Z-phase signal is encountered in the homing process mentioned above, and time-out is triggered, then a homing failure occurs.

Diagram 6

CiA402 Object 0x6098H	Z	Y	X	Function Description
Homing Method	Home Limit	Z-phase Signal Setting	Homing Mode	
6	0	1	3	Execute homing position control in the reverse direction until encountering the ORG switch (from 0 to 1). Then, continue locating the Z-phase signal in the same direction as the origin. Stops when encountering the negative limit switch.

1. The initial movement direction depends on the ORG switch status. The initial movement is in the forward direction if the ORG switch is active; the initial movement is in the reverse direction if the ORG switch is inactive.
2. When moving in the forward direction and encountering the falling-edge of the ORG switch, the movement direction is reversed and waits for the rising-edge trigger of the ORG switch.
3. Then, the movement locates the Z-phase signal in the reverse direction and uses the Z-phase signal as the origin.

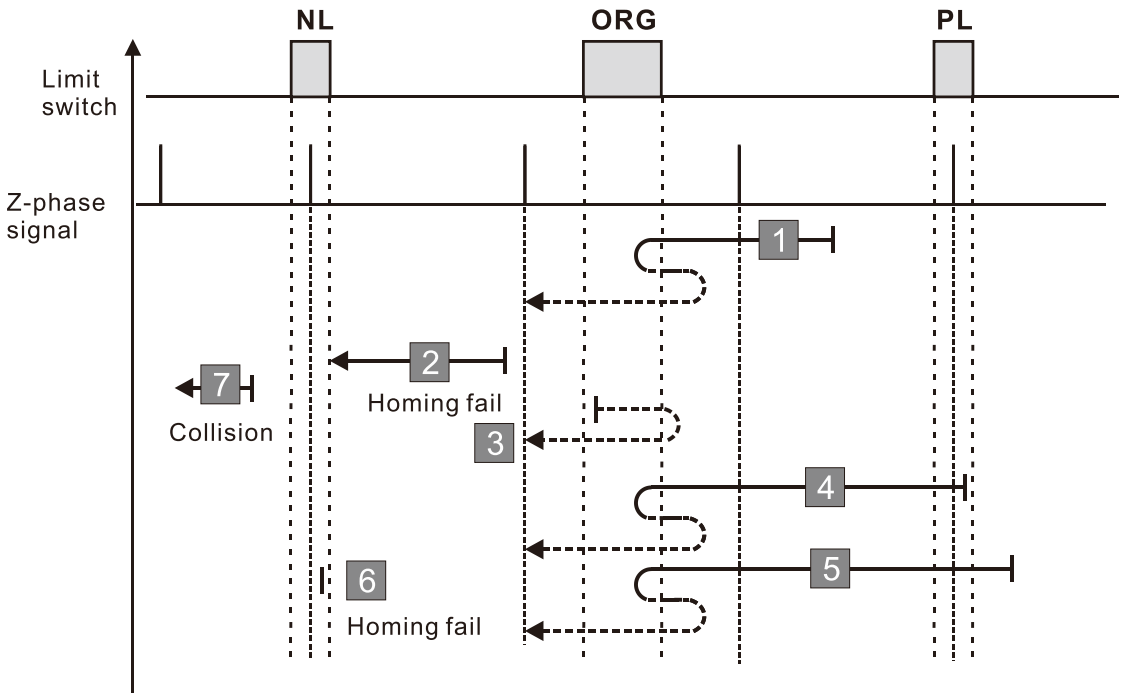

A homing failure occurs when the following conditions happen:

1. If the initial motor movement is in the forward direction and no falling edge of the ORG switch is encountered, a homing failure occurs.
2. If a positive or negative limit switch signal is encountered in the process of motor movement, a homing failure occurs.
3. If no ORG switch or Z-phase signal is encountered in the homing process mentioned above, and time-out is triggered, then a homing failure occurs.

Diagram 7

CiA402 Object 0x6098H	Z	Y	X	Function Description
Homing Method	Home Limit	Z-phase Signal Setting	Homing Mode	
7	1	0	2	Execute homing position control in the forward direction until encountering the ORG switch (from 0 to 1). Then, the direction is reversed to locate the Z-phase signal as the origin. When encountering the positive limit switch, the direction is reversed to locate the origin.

1. The initial movement direction depends on the ORG switch status. The initial movement is in the reverse direction if the ORG switch is active; the initial movement is in the forward direction if the ORG switch is inactive.
2. When moving in the forward direction and encountering the positive limit switch, the movement direction is reversed and waits for the falling-edge trigger of the positive limit switch.
3. When moving in the forward direction and encountering the rising edge of the ORG switch, the movement direction is reversed and waits for the falling-edge trigger of the ORG switch..
4. Then, the movement locates the Z-phase signal in the reverse direction and uses the Z-phase signal as the origin.

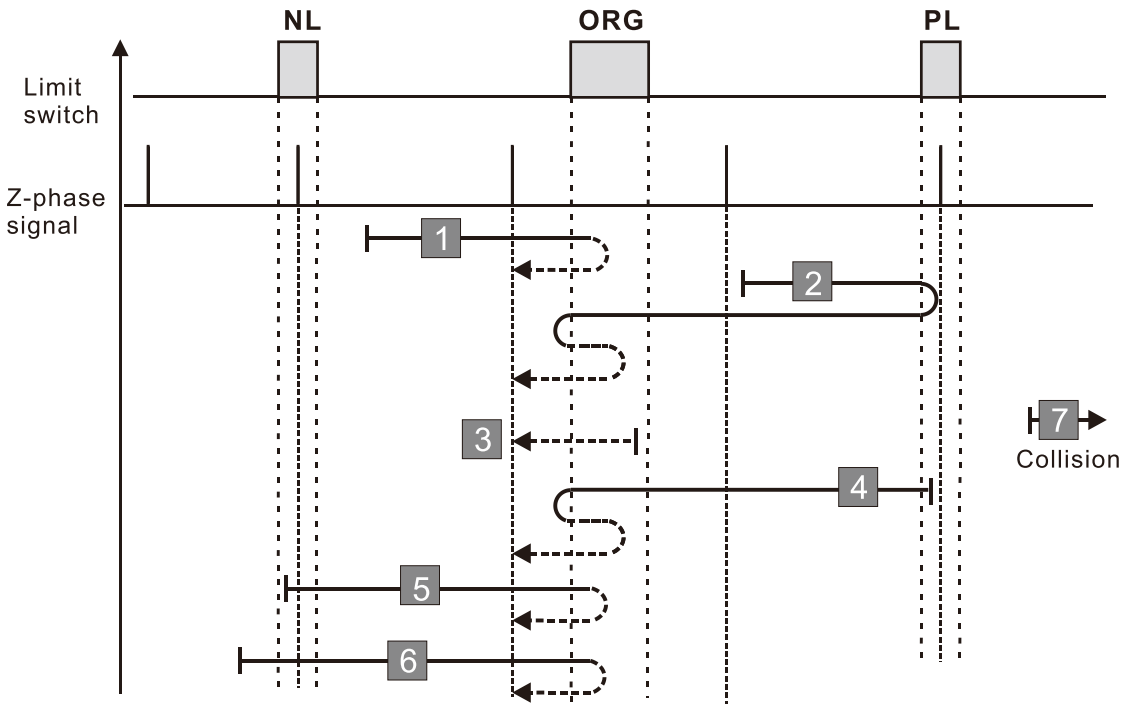

A homing failure occurs when the following conditions happen:

1. If a negative limit switch signal is encountered when the motor moves in the reverse direction, a homing failure occurs.
2. If no positive limit switch or Z-phase signal is encountered in the homing process mentioned above, and time-out is triggered, then a homing failure occurs.

Diagram 8

CiA402 Object 0x6098H	Z	Y	X	Function Description
Homing Method	Home Limit	Z-phase Signal Setting	Homing Mode	
8	1	1	2	Execute homing position control in the forward direction until encountering the ORG switch (from 0 to 1). Then, continue locating the Z-phase signal in the same direction as the origin. When encountering the positive limit switch, the direction is reversed to locate the origin.

1. The initial movement direction depends on the ORG switch status. The initial movement is in the reverse direction if the ORG switch is active; the initial movement is in the forward direction if the ORG switch is inactive.
2. When moving in the forward direction and encountering the positive limit switch, the movement direction is reversed and waits for the falling-edge trigger of the positive limit switch.
3. When moving in the reverse direction and encountering the falling edge of the ORG switch, the movement direction is reversed and waits for the rising-edge trigger of the ORG switch..
4. Then, the movement locates the Z-phase signal in the forward direction and uses the Z-phase signal as the origin.

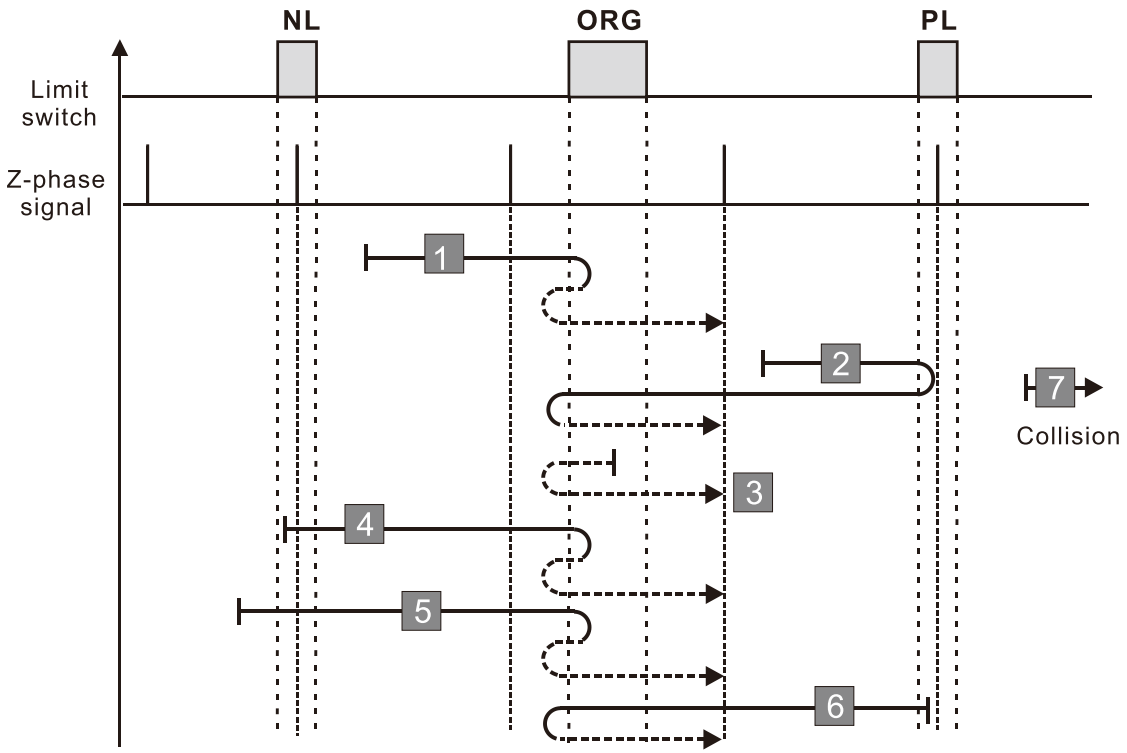

A homing failure occurs when the following conditions happen:

1. If a negative limit switch signal is encountered when the motor moves in the reverse direction, a homing failure occurs.
2. If no positive limit switch or Z-phase signal is encountered in the homing process mentioned above, and time-out is triggered, then a homing failure occurs.

Diagram 9

CiA402 Object 0x6098H	Z	Y	X	Function Description
Homing Method	Home Limit	Z-phase Signal Setting	Homing Mode	
9	1	0	6	Execute homing position control in the forward direction until encountering the ORG switch (from 1 to 0). Then, the direction is reversed to locate the Z-phase signal as the origin. When encountering the positive limit switch, the direction is reversed to locate the origin.

1. The initial movement is in the forward direction.
2. When moving in the forward direction and encountering the positive limit switch, the movement direction is reversed and waits for the falling-edge trigger of the positive limit switch.
3. When moving in the forward direction and encountering the falling edge of the ORG switch, the movement direction is reversed and waits for the rising-edge trigger of the ORG switch..
4. Then, the movement locates the Z-phase signal in the reverse direction and uses the Z-phase signal as the origin.

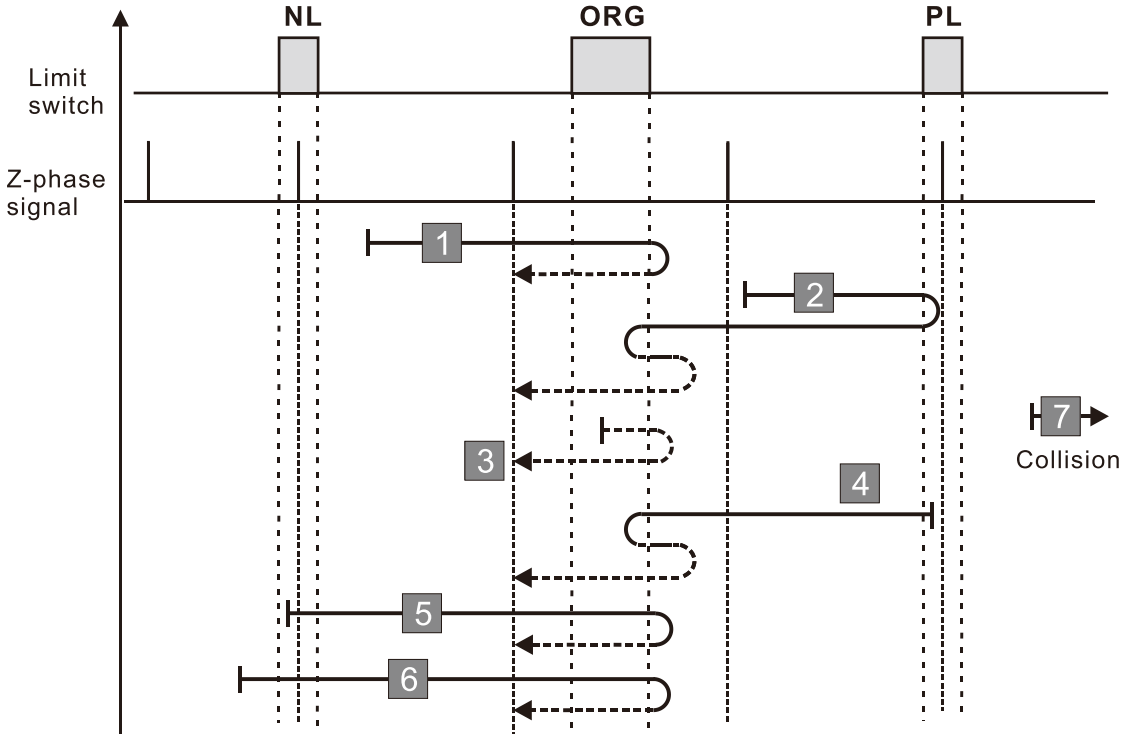

A homing failure occurs when the following conditions happen:

1. If a negative limit switch signal is encountered when the motor moves in the reverse direction, a homing failure occurs.
2. If no positive limit switch or Z-phase signal is encountered in the homing process mentioned above, and time-out is triggered, then a homing failure occurs.

Diagram 10

CiA402 Object 0x6098H	Z	Y	X	Function Description
Homing Method	Home Limit	Z-phase Signal Setting	Homing Mode	
10	1	1	6	Execute homing position control in the forward direction until encountering the ORG switch (from 1 to 0). Then, continue locating the Z-phase signal in the same direction as the origin. When encountering the positive limit switch, the direction is reversed to locate the origin.

1. The initial movement is in the forward direction.
2. When moving in the forward direction and encountering the positive limit switch, the movement direction is reversed and waits for the falling-edge trigger of the positive limit switch.
3. When moving in the reverse direction and encountering the rising edge of the ORG switch, the movement direction is reversed and waits for the falling-edge trigger of the ORG switch.
4. Then, the movement locates the Z-phase signal in the forward direction and uses the Z-phase signal as the origin.

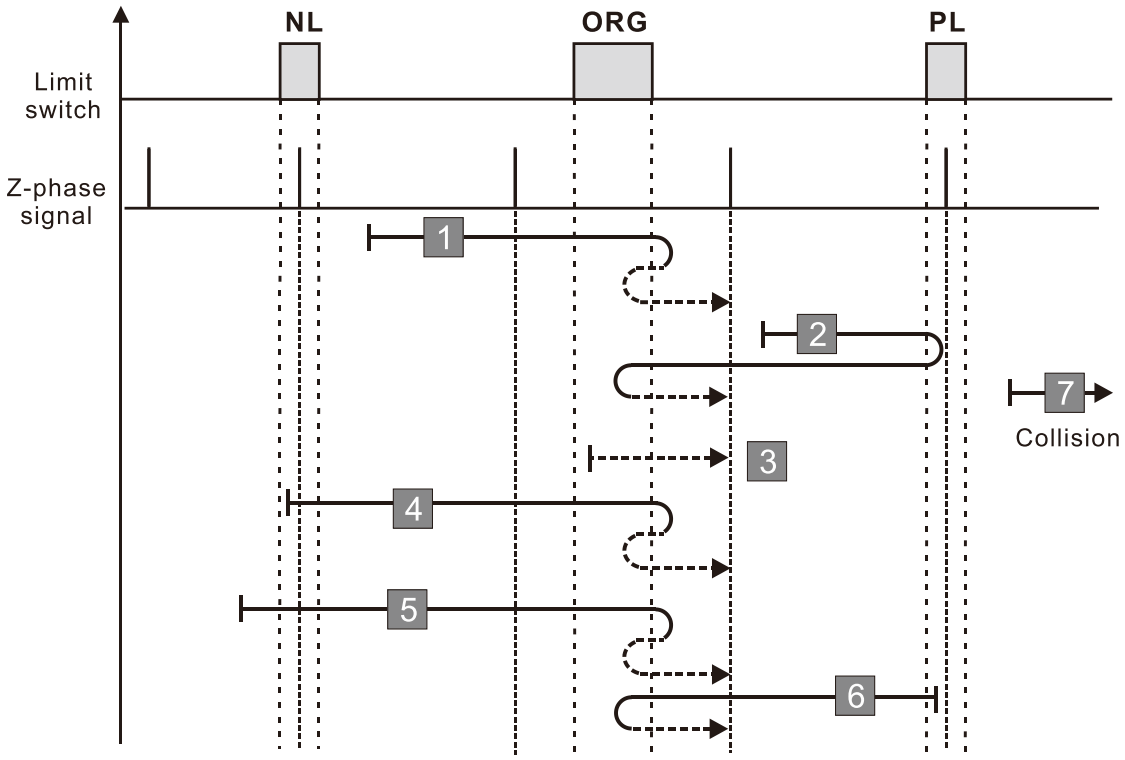

A homing failure occurs when the following conditions happen:

1. If a negative limit switch signal is encountered when the motor moves in the reverse direction, a homing failure occurs.
2. If no positive limit switch or Z-phase signal is encountered in the homing process mentioned above, and time-out is triggered, then a homing failure occurs.

Diagram 11

CiA402 Object 0x6098H	Z	Y	X	Function Description
Homing Method	Home Limit	Z-phase Signal Setting	Homing Mode	
11	1	0	3	Execute homing position control in the reverse direction until encountering the ORG switch (from 0 to 1). Then, the direction is reversed to locate the Z-phase signal as the origin. When encountering the negative limit switch, the direction is reversed to locate the origin.

1. The initial movement direction depends on the ORG switch status. The initial movement is in the reverse direction if the ORG switch is active; the initial movement is in the forward direction if the ORG switch is inactive.
2. When moving in the reverse direction and encountering the negative limit switch, the movement direction is reversed and waits for the falling-edge trigger of the negative limit switch.
3. When moving in the reverse direction and encountering the rising edge of the ORG switch, the movement direction is reversed and waits for the falling-edge trigger of the ORG switch.
4. Then, the movement locates the Z-phase signal in the forward direction and uses the Z-phase signal as the origin.

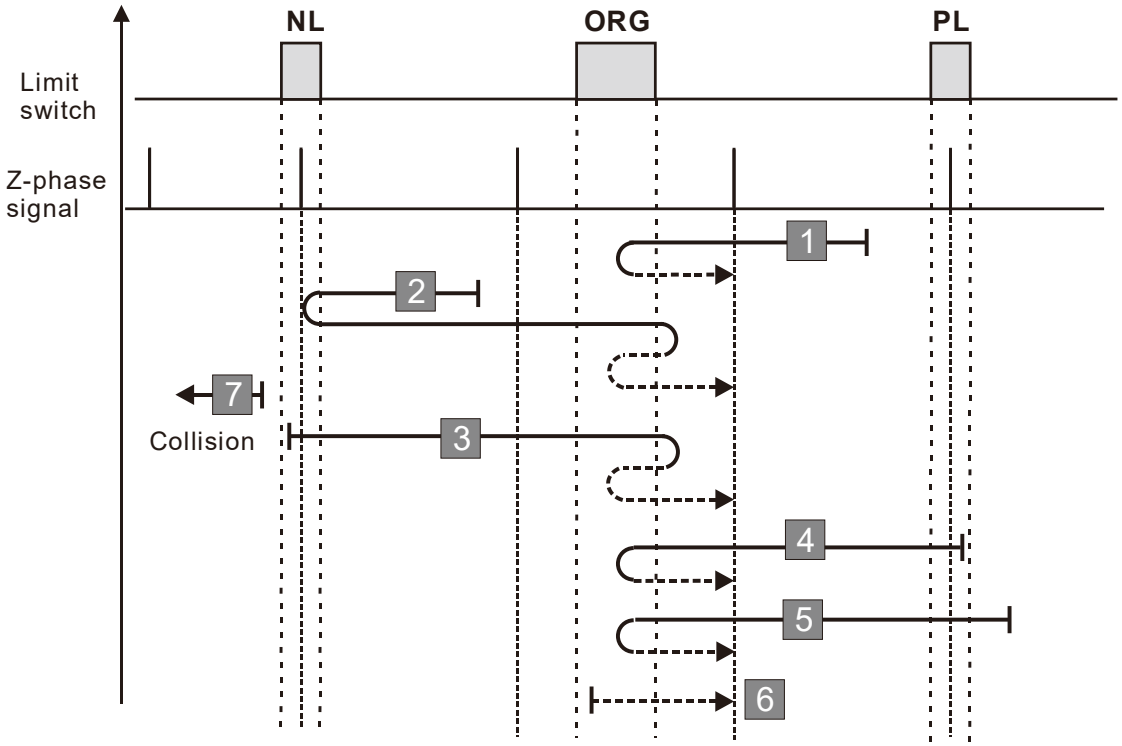

A homing failure occurs when the following conditions happen:

1. If a positive limit switch signal is encountered when the motor moves in the forward direction, a homing failure occurs.
2. If no negative limit switch or Z-phase signal is encountered in the homing process mentioned above, and time-out is triggered, then a homing failure occurs.

Diagram 12

CiA402 Object 0x6098H	Z	Y	X	Function Description
Homing Method	Home Limit	Z-phase Signal Setting	Homing Mode	
12	1	1	3	Execute homing position control in the reverse direction until encountering the ORG switch (from 0 to 1). Then, continue locating the Z-phase signal in the same direction as the origin. When encountering the negative limit switch, the direction is reversed to locate the origin.

1. The initial movement direction depends on the ORG switch status. The initial movement is in the reverse direction if the ORG switch is active; the initial movement is in the forward direction if the ORG switch is inactive.
2. When moving in the reverse direction and encountering the negative limit switch, the movement direction is reversed and waits for the falling-edge trigger of the negative limit switch.
3. When moving in the forward direction and encountering the falling edge of the ORG switch, the movement direction is reversed and waits for the rising-edge trigger of the ORG switch.
4. Then, the movement locates the Z-phase signal in the reverse direction and uses the Z-phase signal as the origin.

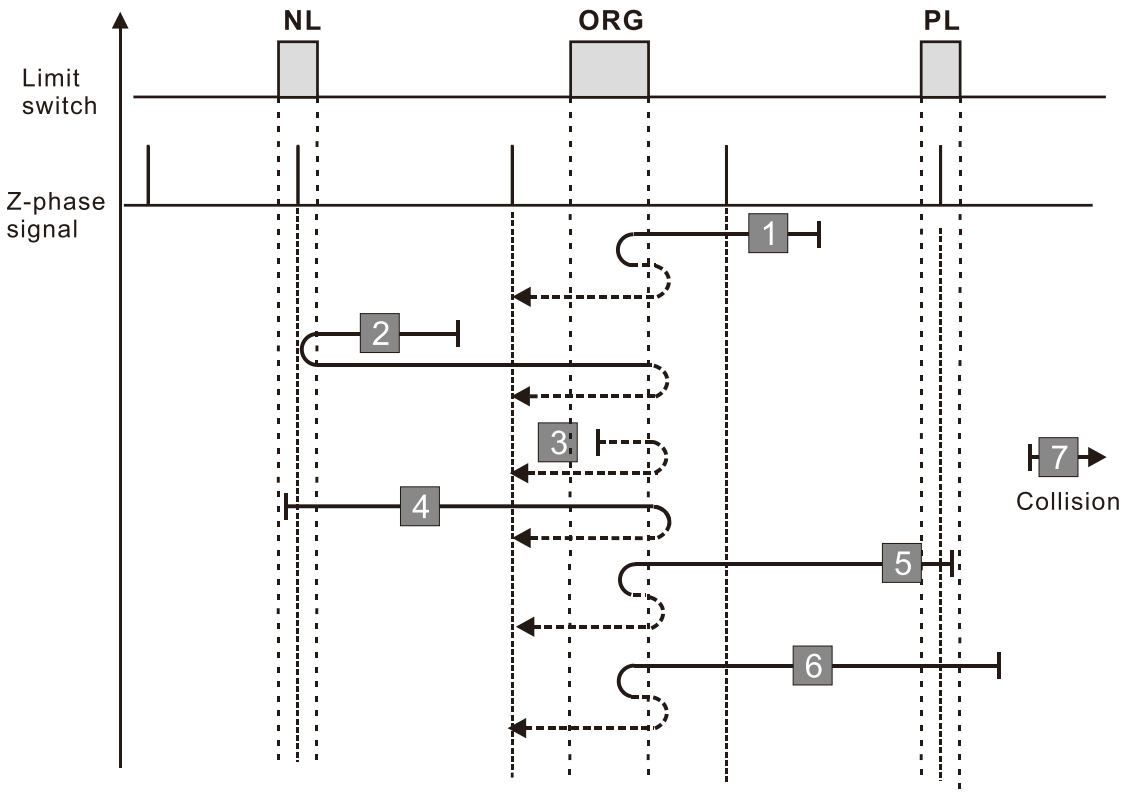

A homing failure occurs when the following conditions happen:

1. If a positive limit switch signal is encountered when the motor moves in the forward direction, a homing failure occurs.
2. If no negative limit switch or Z-phase signal is encountered in the homing process mentioned above, and time-out is triggered, then a homing failure occurs.

Diagram 13

CiA402 Object 0x6098H	Z	Y	X	Function Description
Homing Method	Home Limit	Z-phase Signal Setting	Homing Mode	
13	1	0	7	Execute homing position control in the reverse direction until encountering the ORG switch (from 1 to 0). Then, the direction is reversed to locate the Z-phase signal as the origin. When encountering the negative limit switch, the direction is reversed to locate the origin.

1. The initial movement is in the reverse direction.
2. When moving in the reverse direction and encountering the negative limit switch, the movement direction is reversed and waits for the falling-edge trigger of the negative limit switch.
3. When moving in the reverse direction and encountering the falling edge of the ORG switch, the movement direction is reversed and waits for the rising-edge trigger of the ORG switch.
4. Then, the movement locates the Z-phase signal in the forward direction and uses the Z-phase signal as the origin

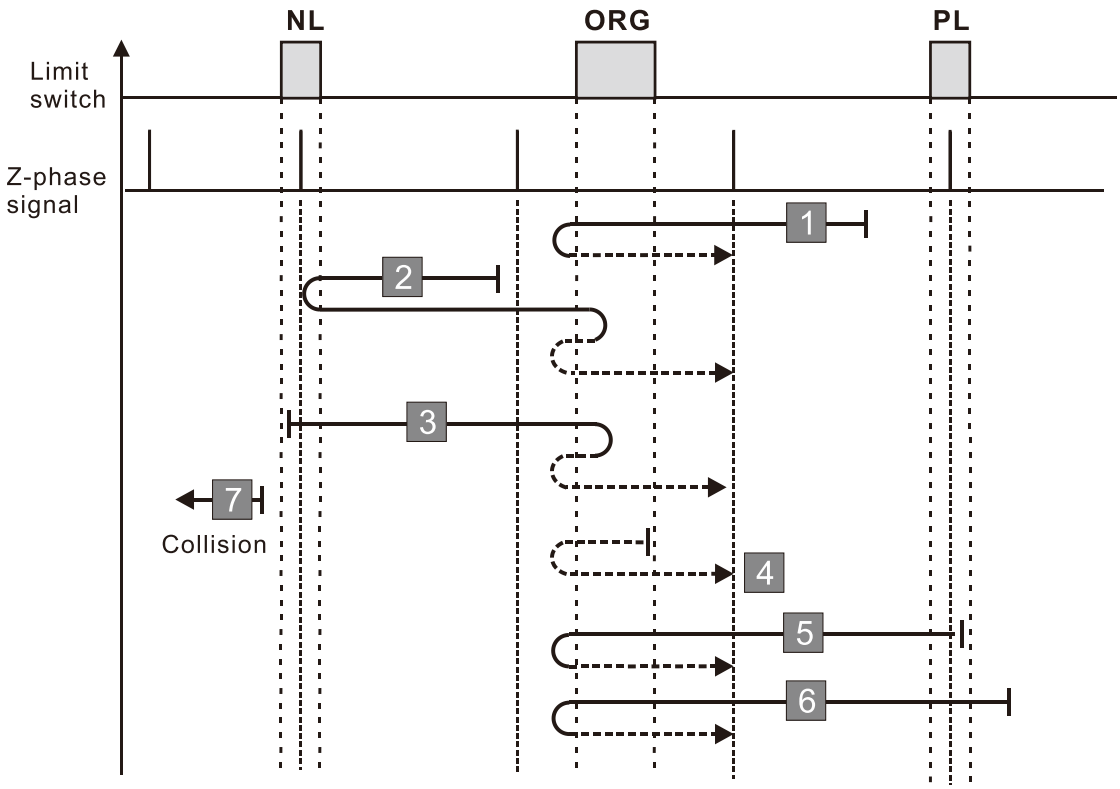

A homing failure occurs when the following conditions happen:

1. If a positive limit switch signal is encountered when the motor moves in the forward direction, a homing failure occurs.
2. If no negative limit switch or Z-phase signal is encountered in the homing process mentioned above, and time-out is triggered, then a homing failure occurs.

Diagram 14

CiA402 Object 0x6098H	Z	Y	X	Function Description
Homing Method	Home Limit	Z-phase Signal Setting	Homing Mode	
14	1	1	7	Execute homing position control in the reverse direction until encountering the ORG switch (from 1 to 0). Then, continue locating the Z-phase signal in the same direction as the origin. When encountering the negative limit switch, the direction is reversed to locate the origin.

1. The initial movement is in the reverse direction.
2. When moving in the reverse direction and encountering the negative limit switch, the movement direction is reversed and waits for the falling-edge trigger of the negative limit switch.
3. When moving in the forward direction and encountering the rising edge of the ORG switch, the movement direction is reversed and waits for the falling-edge trigger of the ORG switch.
4. Then, the movement locates the Z-phase signal in the reverse direction and uses the Z-phase signal as the origin.

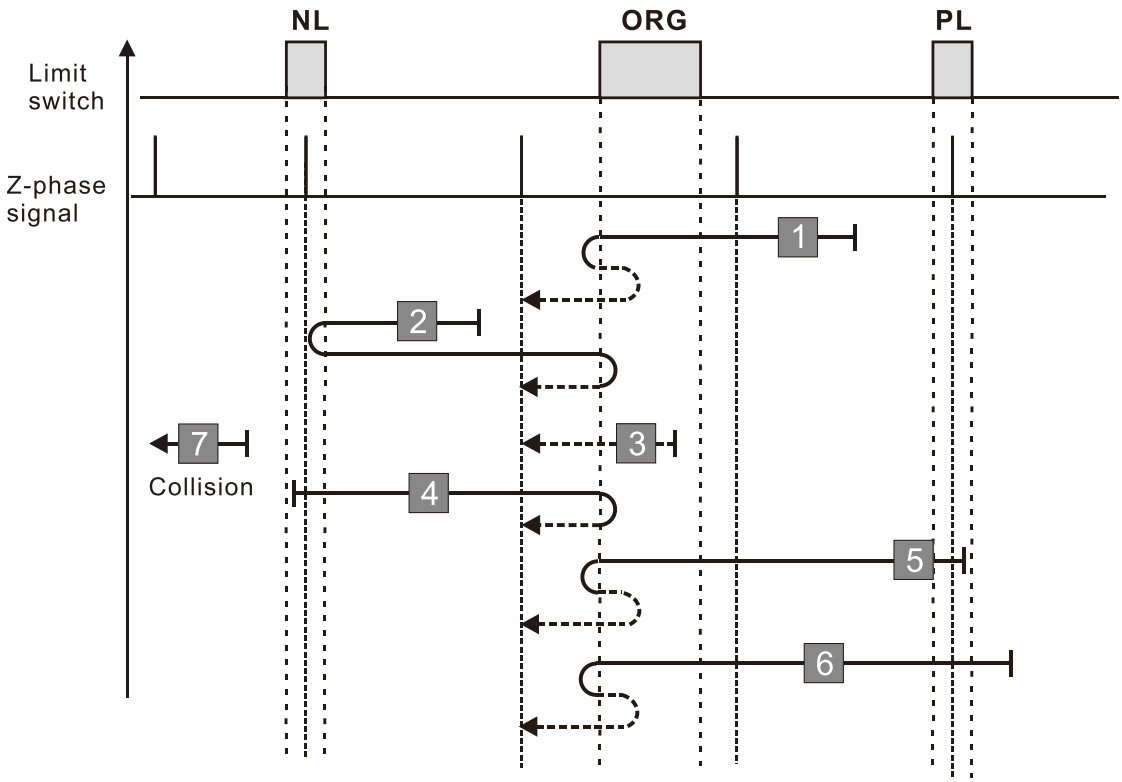

A homing failure occurs when the following conditions happen:

1. If a positive limit switch signal is encountered when the motor moves in the forward direction, a homing failure occurs.
2. If no negative limit switch or Z-phase signal is encountered in the homing process mentioned above, and time-out is triggered, then a homing failure occurs.

Diagram 15

CiA402 Object 0x6098H	Z	Y	X	Function Description
Homing Method	Home Limit	Z-phase Signal Setting	Homing Mode	
17	-	2	1	Execute homing position control in the reverse direction and use the negative limit switch as the origin.

1. The initial movement is in the reverse direction.
2. When encountering the rising edge of the negative limit switch, the movement direction is reversed and waits for the falling-edge trigger of the negative limit switch as the origin.

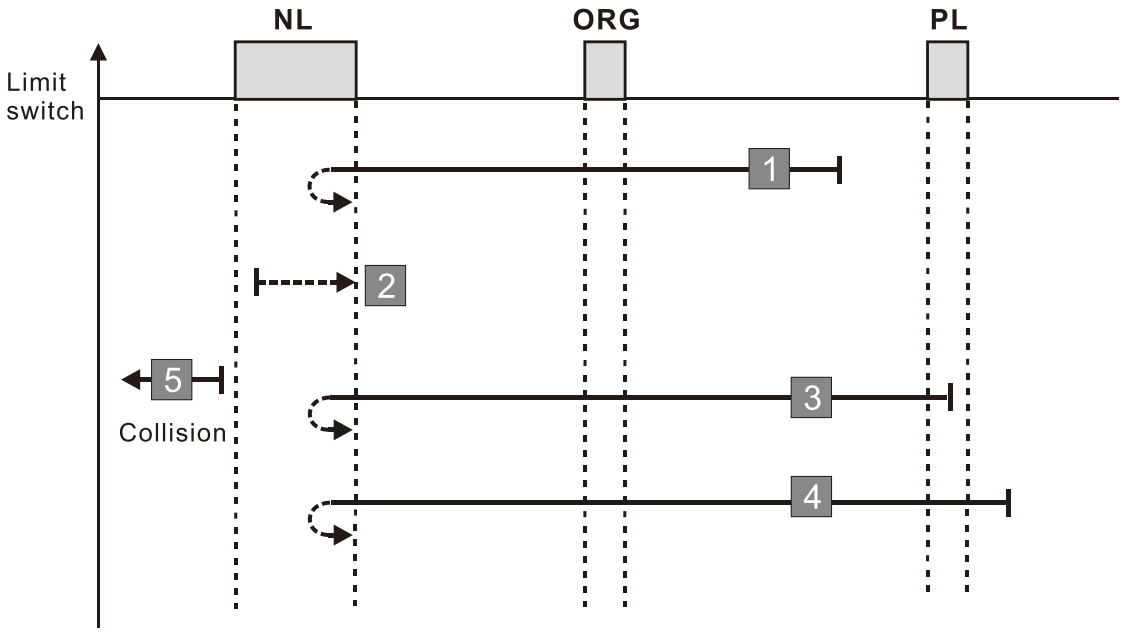

A homing failure occurs when the following conditions happen:

1. If a positive limit switch signal is encountered when the motor moves in the forward direction, a homing failure occurs.
2. If no negative limit switch signal is encountered in the homing process mentioned above, and time-out is triggered, then a homing failure occurs.

Diagram 16

CiA402 Object 0x6098H	Z	Y	X	Function Description
Homing Method	Home Limit	Z-phase Signal Setting	Homing Mode	
18	-	2	0	Execute homing position control in the forward direction and use the positive limit switch as the origin.

1. The initial movement is in the forward direction.
2. When encountering the rising edge of the positive limit switch, the movement direction is reversed and waits for the falling-edge trigger of the positive limit switch as the origin.

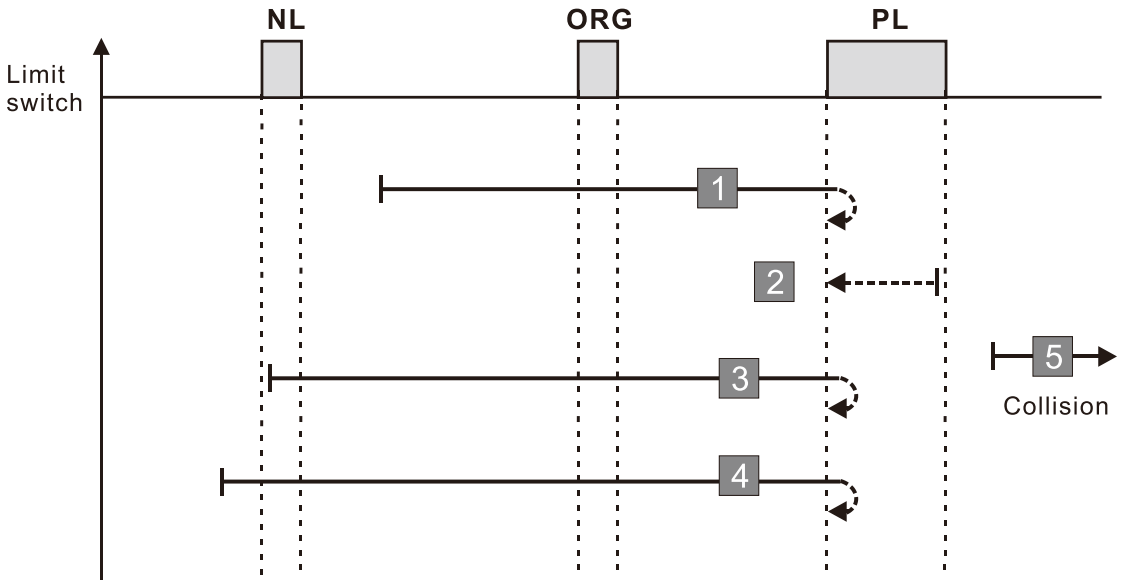

A homing failure occurs when the following conditions happen:

1. If a negative limit switch signal is encountered when the motor moves in the reverse direction, a homing failure occurs.
2. If no positive limit switch signal is encountered in the homing process mentioned above, and time-out is triggered, then a homing failure occurs.

Diagram 17

CiA402 Object 0x6098H	Z	Y	X	Function Description
Homing Method	Home Limit	Z-phase Signal Setting	Homing Mode	
19	No correspondence			See the diagram for homing method 19

1. The initial movement direction depends on the ORG switch status. The initial movement is in the reverse direction if the ORG switch is active; the initial movement is in the forward direction if the ORG switch is inactive.
2. When moving in the forward direction and encountering the rising edge of the ORG switch, the movement direction is reversed.
3. Then, wait for the falling-edge trigger of the ORG switch as the origin.

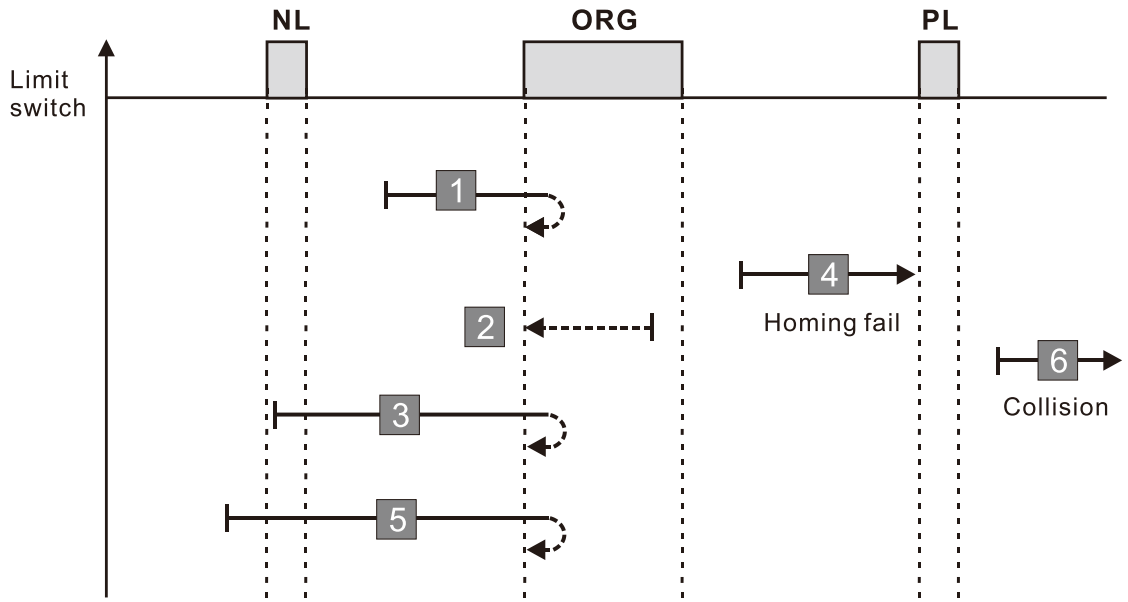

A homing failure occurs when the following conditions happen:

1. If the initial motor movement is in the forward direction and no falling edge of the ORG switch is encountered, a homing failure occurs.
2. If a positive or negative limit switch signal is encountered in the process of motor movement, a homing failure occurs.
3. If no ORG switch signal is encountered in the homing process mentioned above, and time-out is triggered, then a homing failure occurs.

Diagram 18

CiA402 Object 0x6098H	Z	Y	X	Function Description
Homing Method	Home Limit	Z-phase Signal Setting	Homing Mode	
20	0	2	2	Execute homing position control in the forward direction and use the ORG switch (from 0 to 1) as the origin. Stops when encountering the positive limit switch.

1. The initial movement direction depends on the ORG switch status. The initial movement is in the reverse direction if the ORG switch is active; the initial movement is in the forward direction if the ORG switch is inactive.
2. When moving in the reverse direction and encountering the falling edge of the ORG switch, the movement direction is reversed.
3. Then, wait for the rising-edge trigger of the ORG switch as the origin.

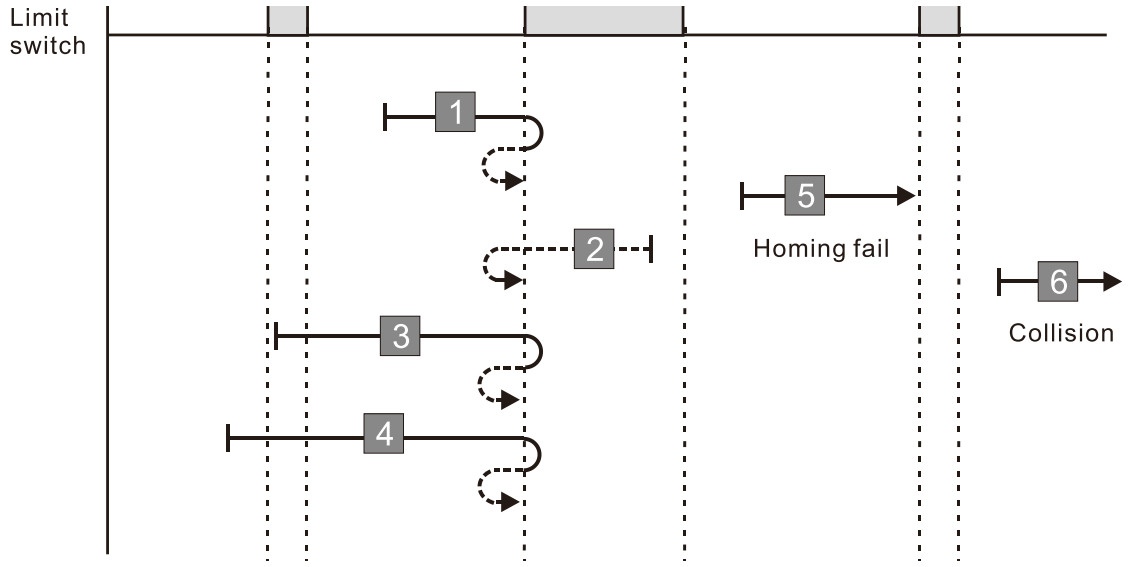

A homing failure occurs when the following conditions happen:

1. If the initial motor movement is in the reverse direction and no falling edge of the ORG switch is encountered, a homing failure occurs.
2. If a positive or negative limit switch signal is encountered in the process of motor movement, a homing failure occurs.
3. If no ORG switch signal is encountered in the homing process mentioned above, and time-out is triggered, then a homing failure occurs.

Diagram 19

CiA402 Object 0x6098H	Z	Y	X	Function Description
Homing Method	Home Limit	Z-phase Signal Setting	Homing Mode	
21	No correspondence			See the diagram 19 for homing method 21

1. The initial movement direction depends on the ORG switch status. The initial movement is in the forward direction if the ORG switch is active; the initial movement is in the reverse direction if the ORG switch is inactive.
2. When moving in the reverse direction and encountering the rising edge of the ORG switch, the movement direction is reversed.
3. Then, water for the falling-edge trigger of the ORG switch as the origin.

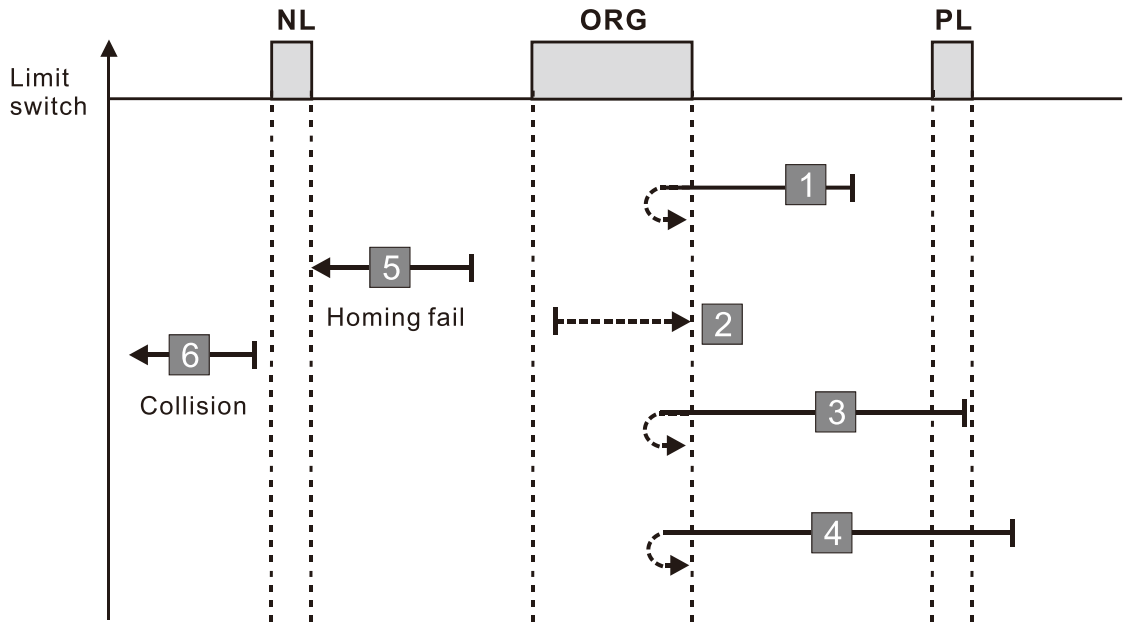

A homing failure occurs when the following conditions happen:

1. If the initial motor movement is in the reverse direction and no rising edge of the ORG switch is encountered, a homing failure occurs.
2. If a positive or negative limit switch signal is encountered in the process of motor movement, a homing failure occurs.
3. If no ORG switch signal is encountered in the homing process mentioned above, and time-out is triggered, then a homing failure occurs.

Diagram 20

CiA402 Object 0x6098H	Z	Y	X	Function Description
Homing Method	Home Limit	Z-phase Signal Setting	Homing Mode	
22	0	2	3	Execute homing position control in the reverse direction and use the ORG switch (from 0 to 1) as the origin. Stops when encountering the negative limit switch.

1. The initial movement direction depends on the ORG switch status. The initial movement is in the forward direction if the ORG switch is active; the initial movement is in the reverse direction if the ORG switch is inactive.
2. When moving in the forward direction and encountering the falling edge of the ORG switch, the movement direction is reversed.
3. Then, wait for the rising-edge trigger of the ORG switch as the origin.

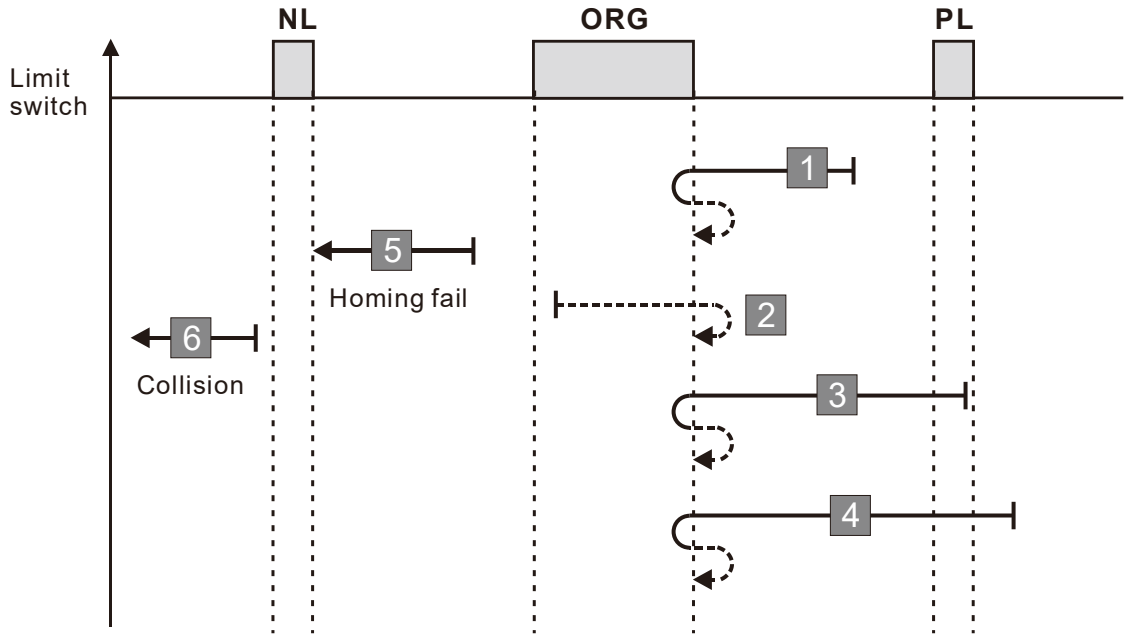

A homing failure occurs when the following conditions happen:

1. If the initial motor movement is in the forward direction and no falling edge of the ORG switch is encountered, a homing failure occurs.
2. If a positive or negative limit switch signal is encountered in the process of motor movement, a homing failure occurs.
3. If no ORG switch signal is encountered in the homing process mentioned above, and time-out is triggered, then a homing failure occurs.

Diagram 21

CiA402 Object 0x6098H	Z	Y	X	Function Description
Homing Method	Home Limit	Z-phase Signal Setting	Homing Mode	
23	No correspondence			See the diagram for homing method 23

1. The initial movement direction depends on the ORG switch status. The initial movement is in the reverse direction if the ORG switch is active; the initial movement is in the forward direction if the ORG switch is inactive.
2. When moving in the forward direction and encountering the positive limit switch, the movement direction is reversed and waits for the falling-edge trigger of the positive limit switch.
3. When moving in the forward direction and encountering the rising edge of the ORG switch, the movement direction is reversed.
4. Then, wait for the falling-edge trigger of the ORG switch as the origin.

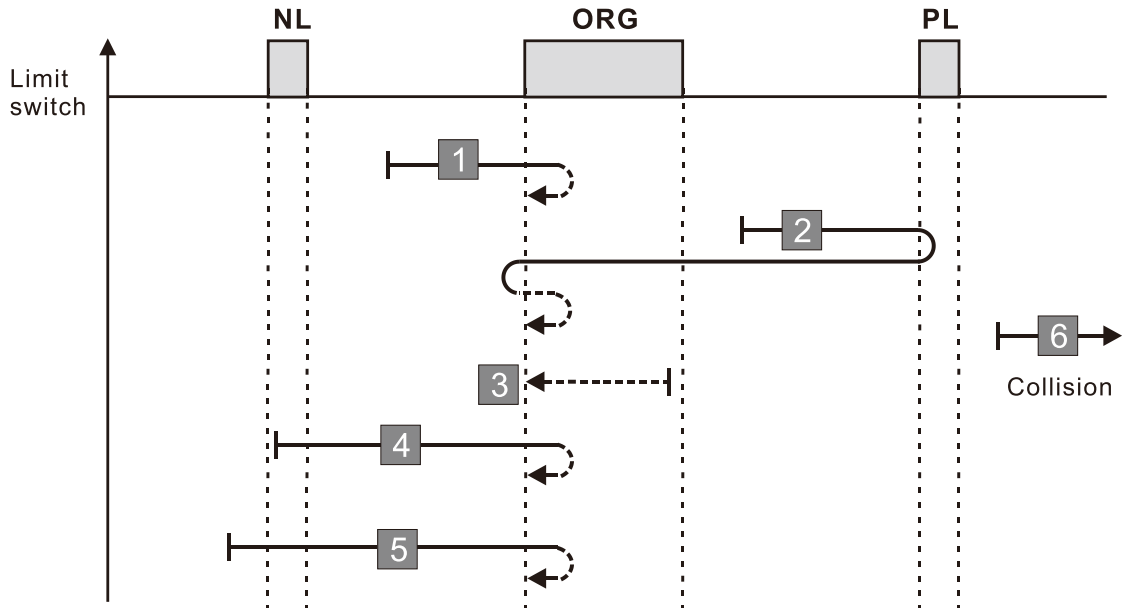

A homing failure occurs when the following conditions happen:

1. If a negative limit switch signal is encountered when the motor moves in the reverse direction, a homing failure occurs.
2. If no positive limit switch signal is encountered in the homing process mentioned above, and time-out is triggered, then a homing failure occurs.

Diagram 22

CiA402 Object 0x6098H	Z	Y	X	Function Description
Homing Method	Home Limit	Z-phase Signal Setting	Homing Mode	
24	1	2	2	Execute homing position control in the forward direction and use the ORG switch (from 0 to 1) as the origin. When encountering the positive limit switch, the direction is reversed to the locate the origin.

1. The initial movement direction depends on the ORG switch status. The initial movement is in the reverse direction if the ORG switch is active; the initial movement is in the forward direction if the ORG switch is inactive.
2. When moving in the forward direction and encountering the positive limit switch, the movement direction is reversed and waits for the falling-edge trigger of the positive limit switch.
3. When moving in the reverse direction and encountering the falling edge of the ORG switch, the movement direction is reversed.
4. Then, wait for the rising-edge trigger of the ORG switch as the origin.

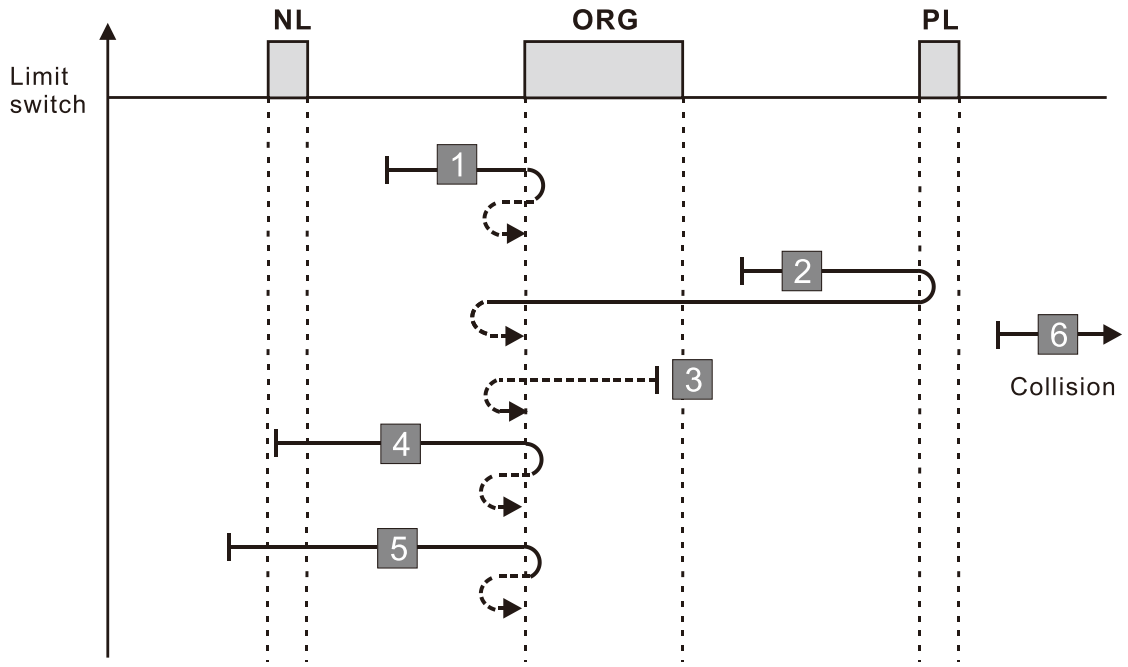

A homing failure occurs when the following conditions happen:

1. If a negative limit switch signal is encountered when the motor moves in the reverse direction, a homing failure occurs.
2. If no positive limit switch signal is encountered in the homing process mentioned above, and time-out is triggered, then a homing failure occurs.

Diagram 23

CiA402 Object 0x6098H	Z	Y	X	Function Description
Homing Method	Home Limit	Z-phase Signal Setting	Homing Mode	
25	No correspondence			See the diagram for homing method 25

1. The initial movement is in the forward direction.
2. When moving in the forward direction and encountering the positive limit switch, the movement direction is reversed and waits for the falling-edge trigger of the positive limit switch.
3. When moving in the forward direction and encountering the falling edge of the ORG switch, the movement direction is reversed.
4. Then, wait for the rising-edge trigger of the ORG switch as the origin.

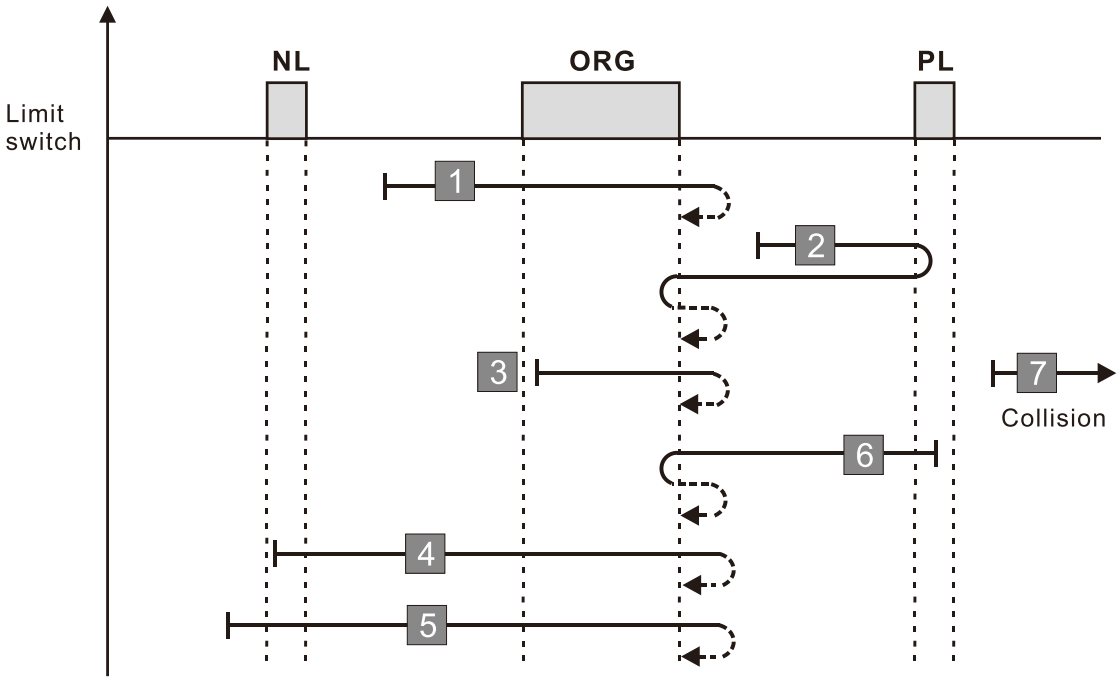

A homing failure occurs when the following conditions happen:

1. If a negative limit switch signal is encountered when the motor moves in the reverse direction, a homing failure occurs.
2. If no positive limit switch signal is encountered in the homing process mentioned above, and time-out is triggered, then a homing failure occurs.

Diagram 24

CiA402 Object 0x6098H	Z	Y	X	Function Description
Homing Method	Home Limit	Z-phase Signal Setting	Homing Mode	
26	1	2	6	Execute homing position control in the forward direction and use the ORG switch (from 1 to 0) as the origin. When encountering the positive limit switch, the direction is reversed to locate the origin.

1. The initial movement is in the forward direction.
2. When moving the in the forward direction and encountering the positive limit switch, the movement direction is reversed and waits for the falling-edge trigger of the positive limit switch.
3. When moving in the reverse direction and encountering the rising edge of the ORG switch, the movement direction is reversed.
4. Then, wait for the falling-edge trigger of the ORG switch as the origin.

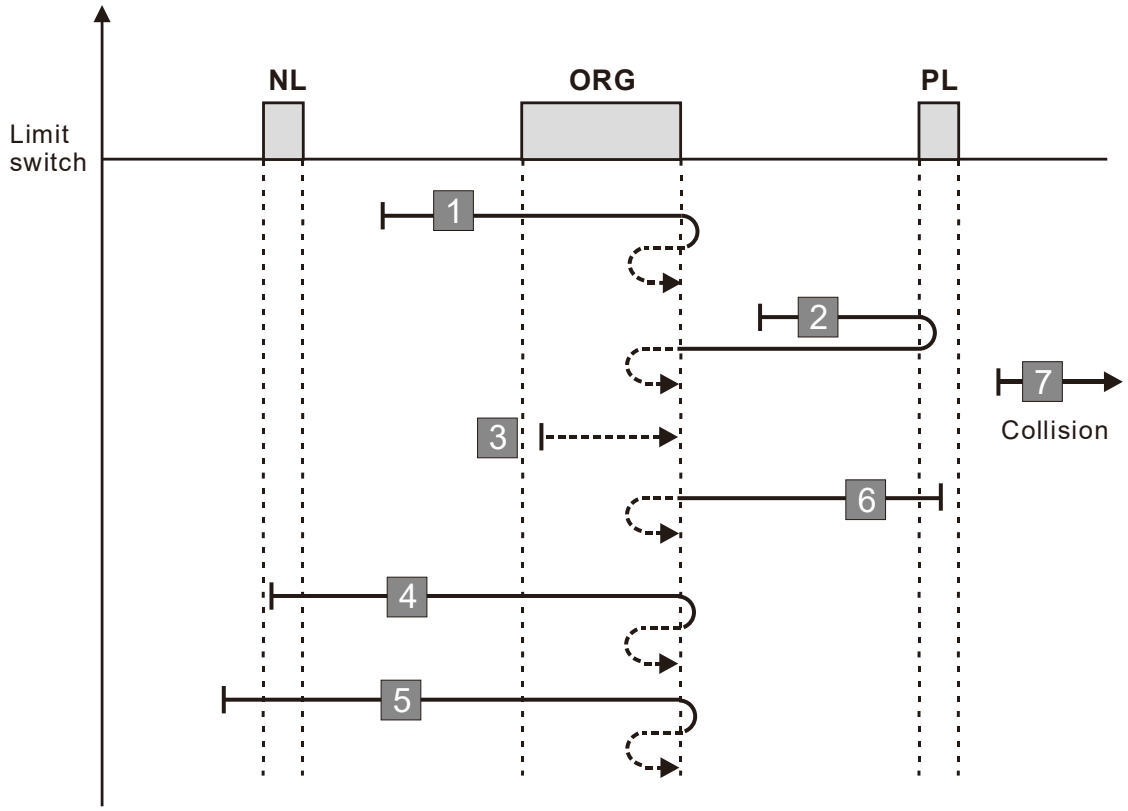

A homing failure occurs when the following conditions happen:

1. If a negative limit switch signal is encountered when the motor moves in the reverse direction, a homing failure occurs.
2. If no positive limit switch signal is encountered in the homing process mentioned above, and time-out is triggered, then a homing failure occurs.

Diagram 25

CiA402 Object 0x6098H	Z	Y	X	Function Description
Homing Method	Home Limit	Z-phase Signal Setting	Homing Mode	
27	No correspondence			See the diagram for homing method 27

1. The initial movement direction depends on the ORG switch status. The initial movement is in the forward direction if the ORG switch is active; the initial movement is in the reverse direction if the ORG switch is inactive.
2. When moving in the reverse direction and encountering the negative limit switch, the movement direction is reversed and waits for the falling-edge trigger of the negative limit switch.
3. When moving in the reverse direction and encountering the rising edge of the ORG switch, the movement direction is reversed.
4. Then, wait for the falling-edge trigger of the ORG switch as the origin.

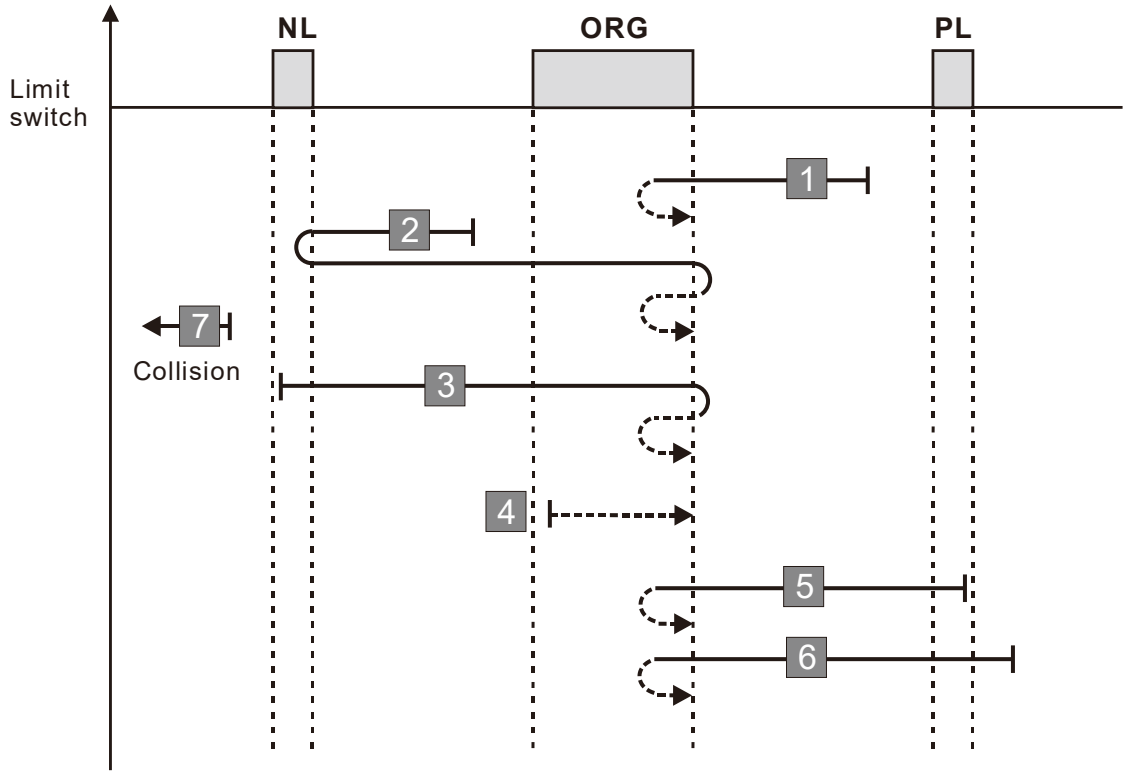

A homing failure occurs when the following conditions happen:

1. If a positive limit switch signal is encountered when the motor moves in the forward direction, a homing failure occurs.
2. If no negative limit switch signal is encountered in the homing process mentioned above, and time-out is triggered, then a homing failure occurs.

Diagram 26

CiA402 Object 0x6098H	Z	Y	X	Function Description
Homing Method	Home Limit	Z-phase Signal Setting	Homing Mode	
28	1	2	3	Execute homing position control in the reverse direction and use the ORG switch (from 0 to 1) as the origin. When encountering the negative limit switch, the direction is reversed to locate the origin.

1. The initial movement direction depends on the ORG switch status. The initial movement is in the forward direction if the ORG switch is active; the initial movement is in the reverse direction if the ORG switch is inactive.
2. When moving in the reverse direction and encountering the negative limit switch, the movement direction is reversed and waits for the falling-edge trigger of the negative limit switch.
3. When moving in the forward direction and encountering the falling edge of the ORG switch, the movement direction is reversed.
4. Then, wait for the rising-edge trigger of the ORG switch as the origin.

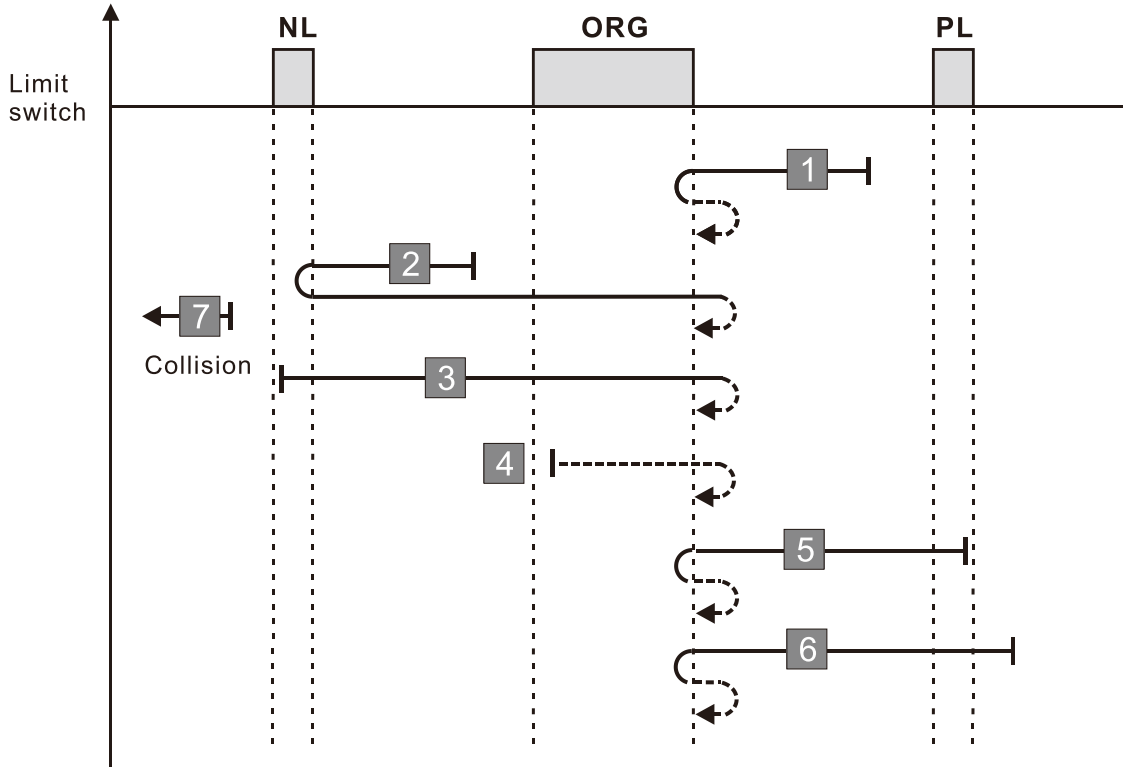

A homing failure occurs when the following conditions happen:

1. If a positive limit switch signal is encountered when the motor moves in the forward direction, a homing failure occurs.
2. If no negative limit switch signal is encountered in the homing process mentioned above, and time-out is triggered, then a homing failure occurs.

Diagram 27

CiA402 Object 0x6098H	Z	Y	X	Function Description
Homing Method	Home Limit	Z-phase Signal Setting	Homing Mode	
29	No correspondence			See the diagram for homing method 29

1. The initial movement is in the reverse direction.
2. When moving in the reverse direction and encountering the negative limit switch, the movement direction is reversed and waits for the falling-edge trigger of the negative limit switch.
3. When moving in the reverse direction and encountering the falling edge of the ORG switch, the movement direction is reversed.
4. Then, wait for the rising-edge trigger of the ORG switch as the origin.

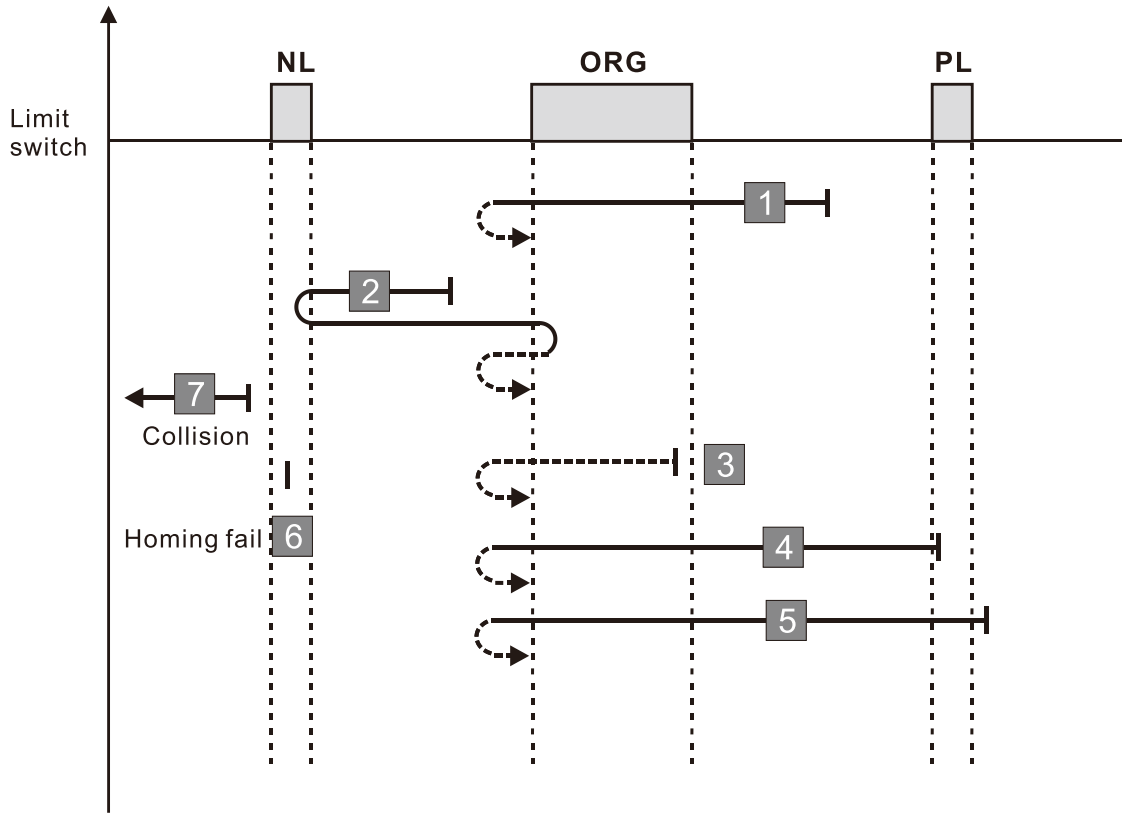

A homing failure occurs when the following conditions happen:

1. If a positive limit switch signal is encountered when the motor moves in the forward direction, a homing failure occurs.
2. If no negative limit switch signal is encountered in the homing process mentioned above, and time-out is triggered, then a homing failure occurs.

Diagram 28

CiA402 Object 0x6098H	Z	Y	X	Function Description
Homing Method	Home Limit	Z-phase Signal Setting	Homing Mode	
30	1	2	7	Execute homing position control in the reverse direction and use the ORG switch (from 1 to 0) as the origin. When encountering the negative limit switch, the direction is reversed to locate the origin.

1. The initial movement is in the reverse direction.
2. When moving in the reverse direction and encountering the negative limit switch, the movement direction is reversed and waits for the falling-edge trigger of the negative limit switch.
3. When moving in the forward direction and encountering the rising edge of the ORG switch, the movement direction is reversed.
4. Then, wait for the falling-edge trigger of the ORG switch as the origin.

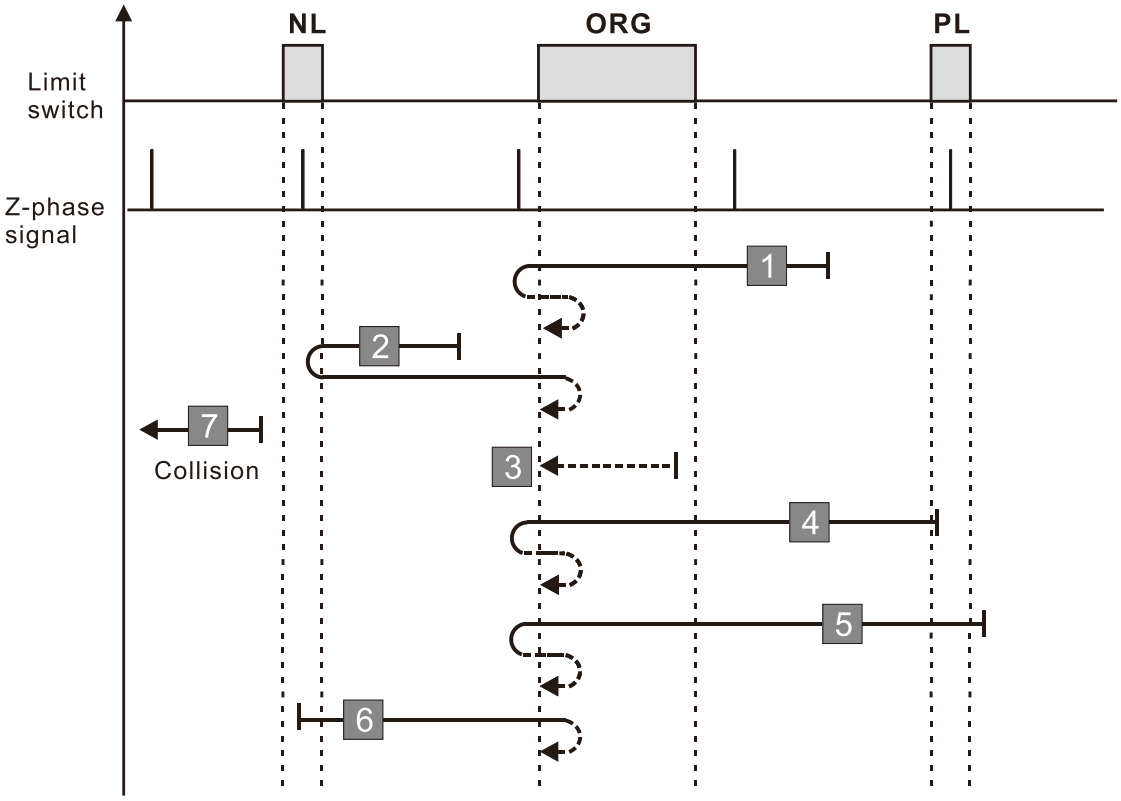

A homing failure occurs when the following conditions happen:

1. If a positive limit switch signal is encountered when the motor moves in the forward direction, a homing failure occurs.
2. If no negative limit switch signal is encountered in the homing process mentioned above, and time-out is triggered, then a homing failure occurs.

Diagram 29

CiA402 Object 0x6098H	Z	Y	X	Function Description
Homing Method	Home Limit	Z-phase Signal Setting	Homing Mode	
33	0	-	5	Locate the Z-phase signal in the reverse direction and use the Z-phase signal as the origin. Stops when encountering the negative limit switch.

1. The initial movement is in the reverse direction.
2. Then, the movement locates the Z-phase signal in the reverse direction and uses the Z-phase signal as the origin.

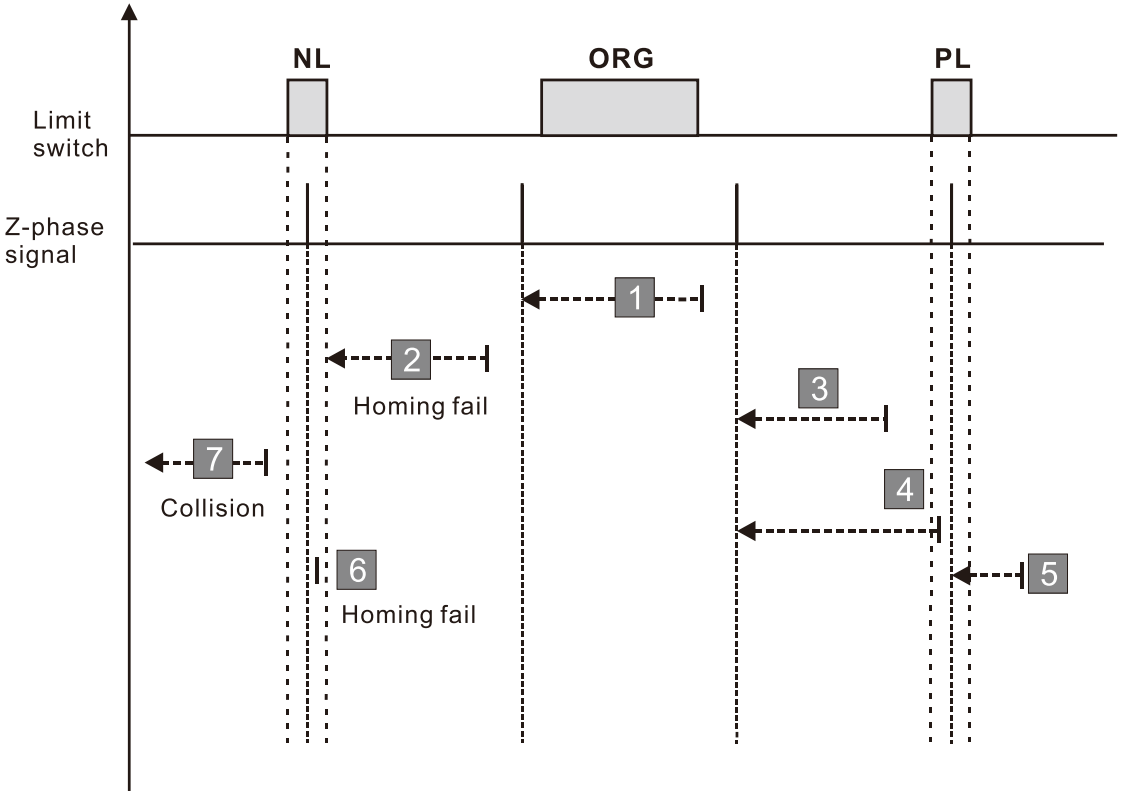

A homing failure occurs when the following conditions happen:

1. If a positive or negative limit switch signal is encountered in the process of motor movement, a homing failure occurs.
2. If no Z-phase signal is encountered in the homing process mentioned above, and time-out is triggered, then a homing failure occurs.

Diagram 30

CiA402 Object 0x6098H	Z	Y	X	Function Description
Homing Method	Home Limit	Z-phase Signal Setting	Homing Mode	
34	0	-	4	Locate the Z-phase signal in the forward direction and use the Z-phase signal as the origin. Stops when encountering the positive limit switch.

1. The initial movement is in the forward direction.
2. Then, the movement locates the Z-phase signal in the forward direction and uses the Z-phase signal as the origin.

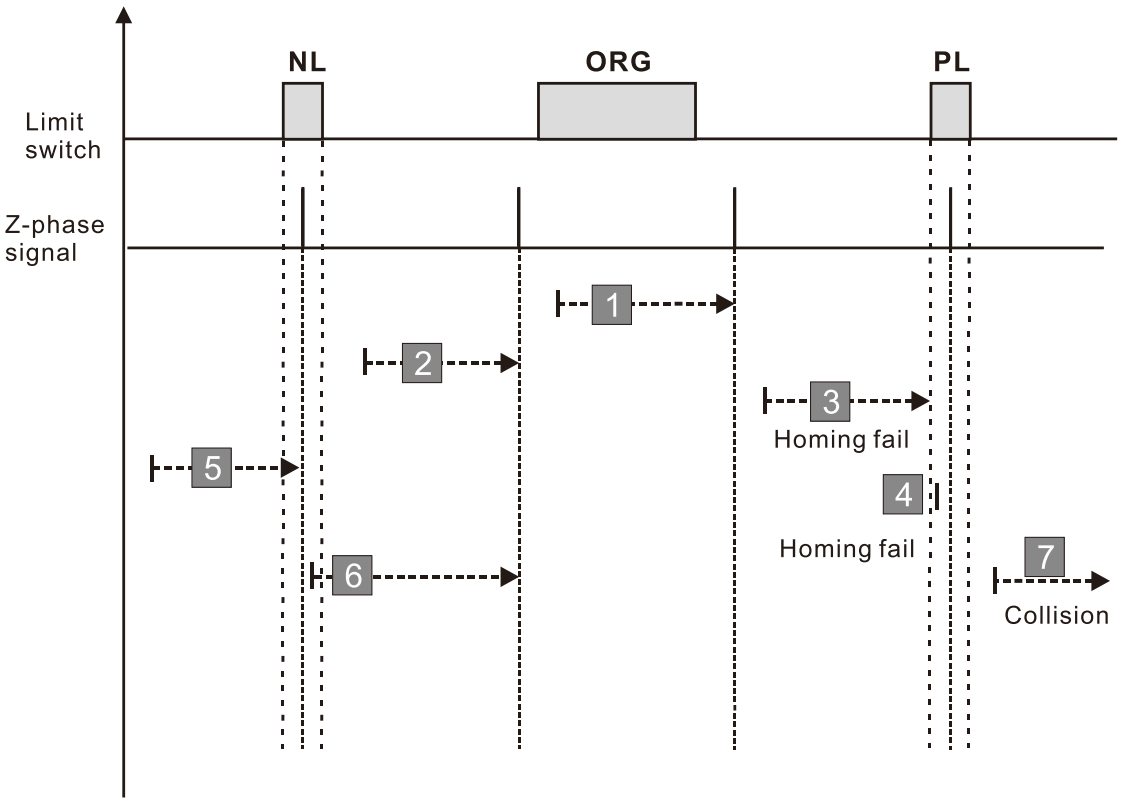

A homing failure occurs when the following conditions happen:

1. If a positive or negative limit switch signal is encountered in the process of motor movement, a homing failure occurs.
2. If no Z-phase signal is encountered in the homing process mentioned above, and time-out is triggered, then a homing failure occurs.

Diagram 31

CiA402 Object 0x6098H	Z	Y	X	Function Description
Homing Method	Home Limit	Z-phase Signal Setting	Homing Mode	
35	-	-	8	Use the current position as the origin.

1. The current position is used as the origin (this function is available even when the drive is in stop status).

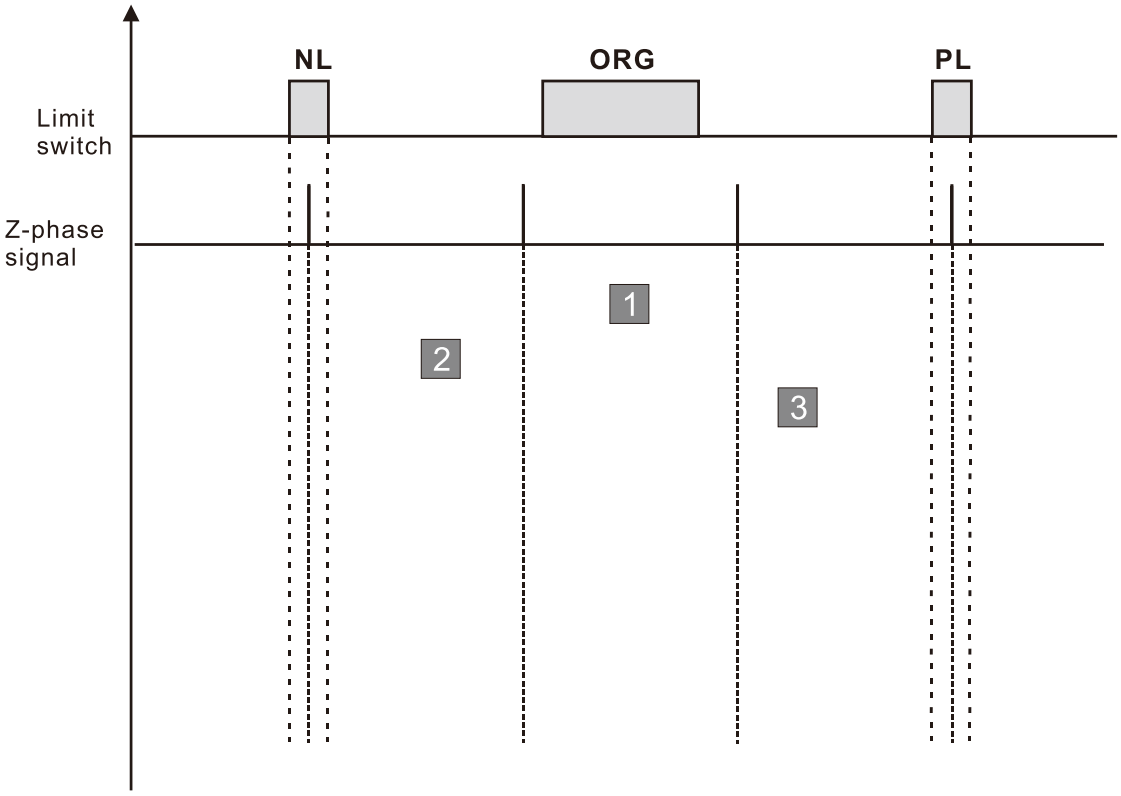

A homing failure occurs when the following condition happen:

1. No homing failure condition occurs.

11-69 Homing Control Time Out

Default: 60.0

Settings 0.0–6000.0 sec.

Sets the time limit for completing the homing process. When executing homing position control, a fault occurs for the drive if positioning time exceeds Pr.11-69.

11-70 Homing Control First Step Speed

Default: 8.00

Settings 0.00–599.00 Hz

11-71 Homing Control Second Step Speed

Default: 2.00

Settings 0.00–599.00 Hz

There are two steps of speed for the homing process:

CiA402 defines:

- The first-step speed is used to locate the switch signals (positive limit switch, negative limit switch and ORG switch).
- The second-step speed is used to locate the reference point (Z-phase signal, the rising / falling edge of the ORG switch signal).

Considering the braking distance when the motor encounters the switch signal, do not use a too fast first-step speed.

To ensure the high repeatability of the reference point, use a low second-step speed.

When executing homing control, the last rising speed refers to the setting of Pr.11-70.

11-72 Homing Control Acceleration / Deceleration Time (0–Homing Control First Step Speed)

Default: 10.00

Settings 0.00–600.00 sec.

This parameter is the first-step of acceleration / deceleration time from 0 Hz to Pr.11-70 when the homing position control function is enabled.

Acceleration / deceleration time in the process of homing refers to Pr.11-72 setting value.

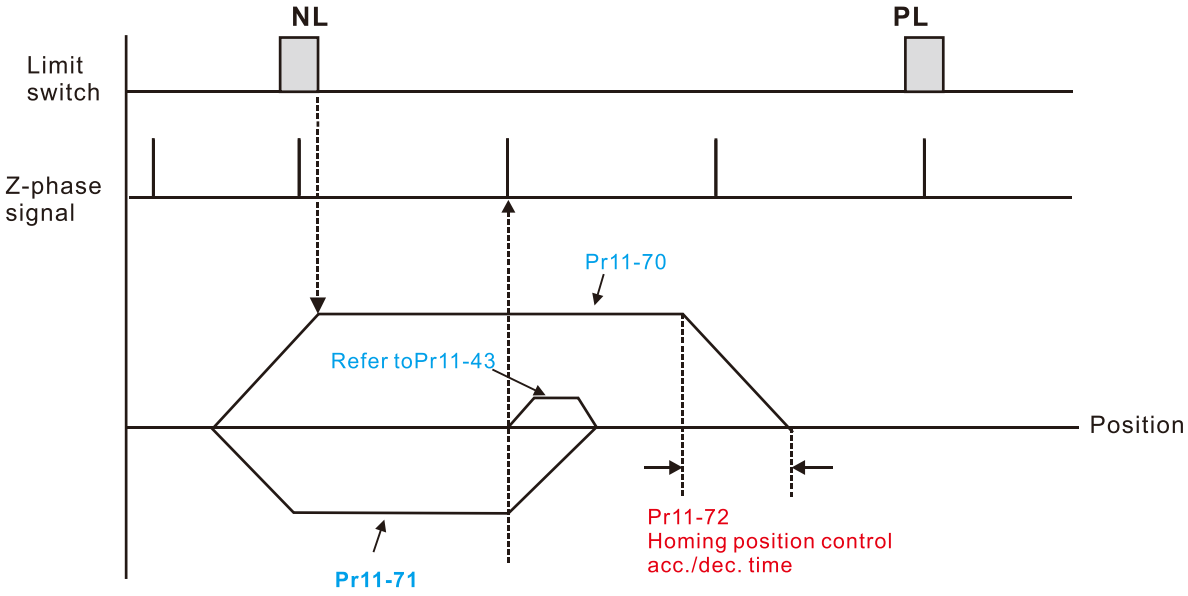

11-73 Homing Control Offset (Revolution)

Default: 0

Settings -30000–30000 resolutions

11-74 Homing Control Offset (Pulse)

Default: 0

Settings Refer to Pr.10-01 setting

- Pr.11-73 and Pr.11-74 are the offset number of revolutions and pulses required for the coordinate system origin (mechanical origin) position determined after the homing positioning process is completed.
- When Pr.10-00 = 8, the setting range for Pr.11-73 is -16383–16383.

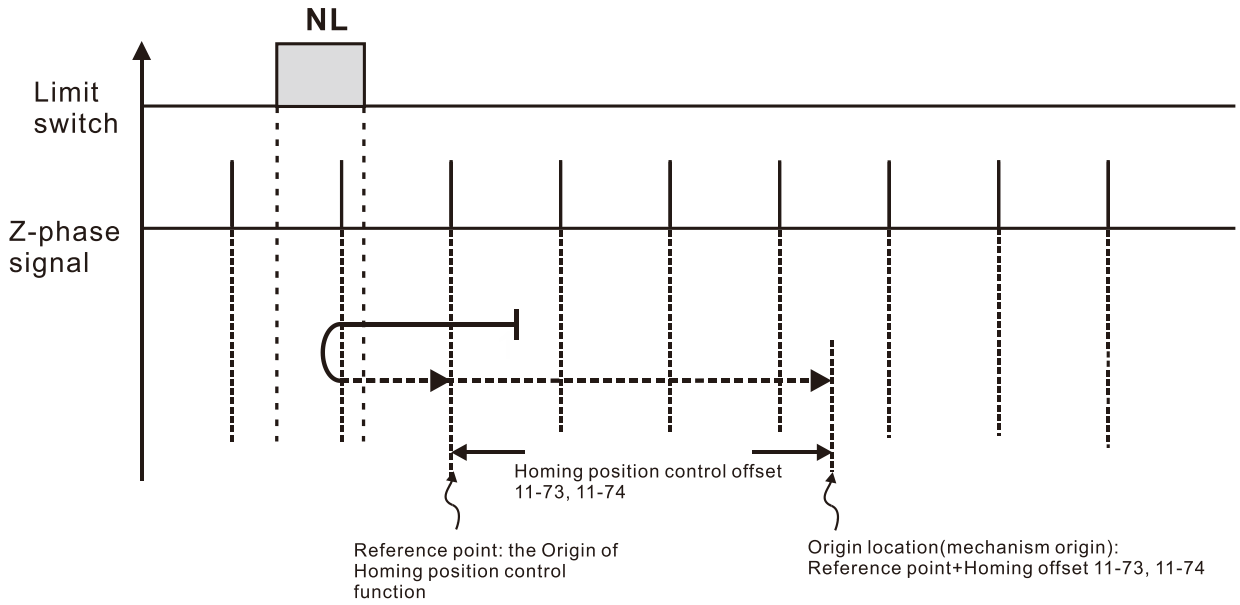

11-75 Position Record (Revolution)

Default: 0

Settings -30000–30000 resolutions

11-76 Position Record (Pulse)

Default: 0

Settings Refer to Pr.10-01 setting

- The position memory function enables the drive to record the motor's current position and makes the coordinate system remain at the mechanical origin even after the drive's power-off when using incremental encoder. With this function, you do not need to execute the homing positioning again.
- The position memory function is only valid when Pr.11-60 bit0 = 1 (position memory function is enabled).
- When the drive is powered off, it records the motor's current position in Pr.11-75 and Pr.11-76. After the drive is powered on again, the motor's initial position = Pr.11-75 × PPR number + Pr.11-76, and the homing process is regarded as completed.
- If the saved position exceeds the maximum capacity of position memory (Pr.11-75 and Pr.11-76), the warning code POF (position counting overflow) is displayed after the drive is powered on again.

11-78 HALT Revived Selection

Default: 0

Settings 0: Stopped

1: Continue according to the previous positon command

When executing multi-step positioning position control through communications:

If 6000h bit3 = 1, the drive stops at zero speed in a Servo ON status according to the deceleration time for position control.

If 6000h bit3 = 0, the drive acts according to Pr.11-78 settings:

When Pr.11-78 = 0, the drive is in complete stop, and Servo ON remains.

When Pr.11-78 = 1, the drive resumes with previous position command.

Control Source Position	bit	Value	bit name	Profile Position Control Mode (pp)
6000h	3	0	HALT	Acts according to Pr.11-78 settings
		1		Stops according to the deceleration time for position control

13 Application Parameters by Industry

This parameter can be set during operation.

13-00 Industry-Specific Parameter Application

Default: 0

Settings 0: Disabled
1: User-defined Parameter
2: Compressor (IM)
3: Fan
4: Pump
10: Air Handling Unit, AHU

NOTE: after you select the macro, some of the default values adjust automatically according to the application selection.

Group setting 02: Compressor (IM)

The following table lists the relevant compressor application parameters.

Pr.	Explanation	Settings
00-11	Speed control mode	0 (V/F control)
00-16	Load selection	3 (Super heavy load)
00-17	Carrier frequency	Default setting
00-20	Master frequency command source (AUTO) / Source selection of the PID target	2 (External analog input)
00-21	Operation command source (AUTO)	1 (External terminals)
00-22	Stop method	0 (Ramp to stop)
00-23	Control of motor direction	1 (Disable reverse)
01-00	Maximum operation frequency	Default setting
01-01	Rated / base frequency of motor 1	Default setting
01-02	Rated / base output voltage of motor 1	Default setting
01-03	Mid-point frequency 1 of motor 1	Default setting
01-04	Mid-point voltage 1 of motor 1	Default setting
01-05	Mid-point frequency 2 of motor 1	Default setting
01-06	Mid-point voltage 2 of motor 1	Default setting
01-07	Minimum output frequency of motor 1	Default setting
01-08	Minimum output voltage of motor 1	Default setting
01-11	Output frequency lower limit	20 (Hz)
01-12	Acceleration time 1	20 (s)
01-13	Deceleration time 1	20 (s)
03-00	Analog input selection (AVI)	0 (No function)
03-01	Analog input selection (ACI)	1 (Frequency command)
05-01	Full-load current for induction motor 1 (A)	Default setting
05-03	Rated speed for induction motor 1 (rpm)	Default setting
05-04	Number of poles for induction motor 1	Default setting

Group setting 03: Fan

The following table lists the relevant fan setting application parameters.

Pr.	Explanation	Settings
00-11	Speed control mode	0 (V/F control)
00-16	Load selection	3 (Super heavy load)
00-17	Carrier frequency	Default setting
00-20	Master frequency command source (AUTO) / Source selection of the PID target	2 (External analog input)
00-21	Operation command source (AUTO)	1 (External terminals)
00-22	Stop method	1 (Coast to stop)
00-23	Control of motor direction	1 (Disable reverse)
00-30	Master frequency command (HAND) source	0 (Digital keypad)
00-31	Operation Command (HAND) source	0 (Digital keypad)
01-00	Maximum operation frequency	Default setting
01-01	Rated / base frequency of motor 1	Default setting
01-02	Rated /base output voltage of motor 1	Default setting
01-03	Mid-point frequency 1 of motor 1	Default setting
01-04	Mid-point voltage 1 of motor 1	Default setting
01-05	Mid-point frequency 2 of motor 1	Default setting
01-06	Mid-point voltage 2 of motor 1	Default setting
01-07	Minimum output frequency of motor 1	Default setting
01-08	Minimum output voltage of motor 1	Default setting
01-10	Output frequency upper limit	50 (Hz)
01-11	Output frequency lower limit	35 (Hz)
01-12	Acceleration time 1	15 (s)
01-13	Deceleration time 1	15 (s)
01-43	V/F curve selection	2 (Second V/F curve)
02-05	Multi-function input command 5 (MI5)	16 (Rotating speed command from ACI)
03-00	Analog input selection (AVI)	1 (Frequency command)
03-01	Analog input selection (ACI)	1 (Frequency command)
03-28	AVI terminal input selection	0 (0–10 V)
03-29	ACI terminal input selection	1 (0–10 V)
03-31	AFM output selection	0 (0–10 V)
03-50	Analog input curve selection	1 (three-point curve of AVI)
07-06	Restart after momentary power loss	2 (Speed tracking by minimum output frequency)
07-11	Number of times of restart after fault	5 (times)
07-33	Auto-restart interval of fault	60 (s)

Group setting 04: Pump

The following table lists the relevant pump setting application parameters.

Pr.	Explanation	Settings
00-11	Speed control mode	0 (V/F control)
00-16	Load Selection	3 (Super heavy load)
00-20	Master frequency command source (AUTO) / Source selection of the PID target	2 (External analog input)
00-21	Operation command source (AUTO)	1 (External terminals)
00-23	Control of motor direction	1 (Disable reverse)
01-00	Maximum operation frequency	Default setting
01-01	Rated / base frequency of motor 1	Default setting
01-02	Rated / base output voltage of motor 1	Default setting
01-03	Mid-point frequency 1 of motor 1	Default setting
01-04	Mid-point voltage 1 of motor 1	Default setting
01-05	Mid-point frequency 2 of motor 1	Default setting
01-06	Mid-point voltage 2 of motor 1	Default setting
01-07	Minimum output frequency of motor 1	Default setting
01-08	Minimum output voltage of motor 1	Default setting
01-10	Output frequency upper limit	50 (Hz)
01-11	Output frequency lower limit	35 (Hz)
01-12	Acceleration time 1	15 (s)
01-13	Deceleration time 1	15 (s)
01-43	V/F curve selection	2 (Second V/F curve)
07-06	Restart after momentary power loss	2 (Speed tracking by minimum output frequency)
07-11	Number of times of restart after fault	5
07-33	Auto-restart interval of fault	60 (s)

Group setting 10: Air Handling Unit, AHU

The following table lists the relevant AHU setting application parameters.

Pr.	Explanation	Settings
00-04	Content of multi-function display	2
00-11	Speed control mode	0 (V/F control)
00-16	Load Selection	3 (Super heavy load)
00-20	Master frequency command source (AUTO) / Source selection of the PID target	2 or 0
00-21	Operation command source (AUTO)	1 or 0
00-22	Stop method	1 (Coast to stop)
00-23	Control of motor direction	1 (Disable reverse)
00-30	Master frequency command (HAND) source	0 (Digital keypad)
00-31	Operation Command (HAND) source	0 (Digital keypad)
01-00	Maximum operation frequency	50
01-01	Rated / base frequency of motor 1	50
01-02	Rated / base output voltage of motor 1	380
01-07	Minimum output frequency of motor 1	0.1
01-10	Output frequency upper limit	50
01-11	Output frequency lower limit	35
01-34	Zero-speed mode	2
01-43	V/F curve selection	2
02-05	Multi-function input command 5 (MI5)	16 or 17
02-13	Multi-function output 1 RLY1	11
02-14	Multi-function output 2 RLY2	1
03-00	Analog input selection (AVI)	1
03-01	Analog input selection (ACI)	1
03-02	Analog input selection (AUI)	1
03-28	AVI terminal input selection	0
03-29	ACI terminal input selection	1
03-20	Multi-function output 1 (AFM1)	0
03-23	Multi-function output 2 (AFM2)	0
03-31	AFM2 output selection	0 or 1
03-50	Analog input curve selection	4 (three-point curve of AUI)
07-06	Restart after momentary power loss	2 (Speed tracking by minimum output frequency)
07-11	Number of times of restart after fault	5 (times)
07-33	Auto-restart interval of fault	60 (s)

14 Extension Card Parameter

✓ This parameter can be set during operation.

✓ 14-00 Extension Card Input Terminal Selection (AI10)
✓ 14-01 Extension Card Input Terminal Selection (AI11)

Default: 0

Settings
0: Disable
1: Frequency command
2: Torque command (torque limit under speed mode)
3: Torque compensation command
4: PID target value
5: PID feedback signal
6: Thermistor (PTC / KTY-84) input value
7: Positive torque limit
8: Negative torque limit
9: Regenerative torque limit
10: Positive / negative torque limit
11: PT100 thermistor input value
13: PID compensation value

📖 If the settings for Pr.14-00–Pr.14-01 are the same, the AI10 input has highest priority.

✓ 14-08 Analog Input Filter Time (AI10)
✓ 14-09 Analog Input Filter Time (AI11)

Default: 0.01

Settings 0.00–20.00 sec.

📖 Analog signals, such as those entering AI1 and AI2, are commonly affected by interference that affects the stability of the analog control. Use the Input Noise Filter to create a more stable system.

📖 When the time constant setting is too large, the control is stable but the control response is slow. When the time constant setting is too small, the control response is faster but the control may be unstable. For optimal setting, adjust the setting based on the control stability or the control response.

14-10 Analog Input 4–20 mA Signal Loss Selection (AI10)
14-11 Analog Input 4–20 mA Signal Loss Selection (AI11)

Default: 0

Settings
0: Disable
1: Continue operation at the last frequency
2: Decelerate to 0 Hz
3: Stop immediately and display ACE
4: Operates with output frequency lower limit (Pr.01-11) and displays ANL

📖 Determines the treatment when the 4–20 mA signal is lost (Pr.14-18 = 2, Pr.14-19 = 2).

📖 When Pr.14-18 or Pr.14-19 = 0, the voltage input is 0–10 V; when Pr.14-18 or Pr.14-19 = 1, the voltage input is 4–20 mA, and Pr.14-10 and Pr.14-11 are invalid.

- When the setting is 1, 2 or 4, the keypad displays the warning code “ANL”. It keeps blinking until the ACI signal is recovered.
- When the drive stops, the condition that causes the warning does not exist, so the warning automatically disappears.
- The ACI (4–20 mA) signal loss level is 3.6 mA, and the return level is 4 mA.

14-12 Extension Card Output Terminal Selection (AO10)
14-13 Extension Card Output Terminal Selection (AO11)

Default: 0

Settings 0–23

- Refer to the function chart below for details setting.

Function Chart

Settings	Functions	Descriptions
0	Output frequency (Hz)	Maximum frequency Pr.01-00 is processed as 100%.
1	Frequency command (Hz)	Maximum frequency Pr.01-00 is processed as 100%.
2	Motor speed (Hz)	Maximum frequency Pr.01-00 is processed as 100%.
3	Output current (rms)	(2.5 × drive rated current) is processed as 100%
4	Output voltage	(2 × motor rated voltage) is processed as 100%
5	DC bus voltage	450V (900V) = 100%
6	Power factor	-1.000–1.000 = 100%
7	Power	(2 × drive rated power) is processed as 100%
8	Torque	Full load torque = 100%
9	AVI	0–10 V = 0–100%
10	ACI	4–20 mA = 0–100%
11	AUI	-10–10V = 0–100%
12	Iq current command	(2.5 × drive rated current) is processed as 100%
13	Iq feedback value	(2.5 × drive rated current) is processed as 100%
14	Id current command	(2.5 × drive rated current) is processed as 100%
15	Id feedback value	(2.5 × drive rated current) is processed as 100%
18	Torque command	Motor rated torque of motor = 100%
19	PG2 frequency command	Maximum frequency Pr.01-00 is processed as 100%.
20	CANopen analog output	For CANopen communication analog output Terminal / Address AFM1 / 2026-A1 AFM2 / 2026-A2 AO10 / 2026-AB AO11 / 2026-AC

<table>
<tr><th>Settings</th><th>Functions</th><th>Descriptions</th></tr>
<tr><td>21</td><td>RS-485 analog output</td><td>For RS-485 (InnerCOM / Modbus) control analog output
<table>
<tr><th>Terminal</th><th>Address</th></tr>
<tr><td>AFM1</td><td>26A0H</td></tr>
<tr><td>AFM2</td><td>26A1H</td></tr>
<tr><td>AO10</td><td>26AAH</td></tr>
<tr><td>AO11</td><td>26ABH</td></tr>
</table></td></tr>
<tr><td>22</td><td>Communication card analog output</td><td>For communication analog output (CMC-EIP01, CMC-PN01, CMC-DN01)
<table>
<tr><th>Terminal</th><th>Address</th></tr>
<tr><td>AFM1</td><td>26A0H</td></tr>
<tr><td>AFM2</td><td>26A1H</td></tr>
<tr><td>AO10</td><td>26AAH</td></tr>
<tr><td>AO11</td><td>26ABH</td></tr>
</table></td></tr>
<tr><td>23</td><td>Constant voltage output</td><td>Pr.03-32 controls the voltage output level.
0–100% of Pr.03-32 corresponds to 0–10 V of AFM.</td></tr>
<tr><td>25</td><td>CANopen and RS-485 analog output</td><td>For CANopen and InnerCOM control output</td></tr>
</table>

14-14 Analog Output 1 Gain (AO10)
14-15 Analog Output 1 Gain (AO11)

Default: 100.0

Settings 0.0–500.0%

Adjusts the voltage level outputted to the analog meter from the analog signal (Pr.14-12, Pr.14-13) output terminal AFM of the drive.

14-16 Analog Output 1 in REV Direction (AO10)
14-17 Analog Output 1 in REV Direction (AO11)

Default: 0

Settings 0: Absolute value in output voltage
1: Reverse output 0 V; forward output 0–10 V
2: Reverse output 5–0 V; forward output 5–10 V

Determines the reverse direction of output voltage when AO10 and AO11 are set as 0–10 V (Pr.14-36 = 0, Pr.14-37 = 0).

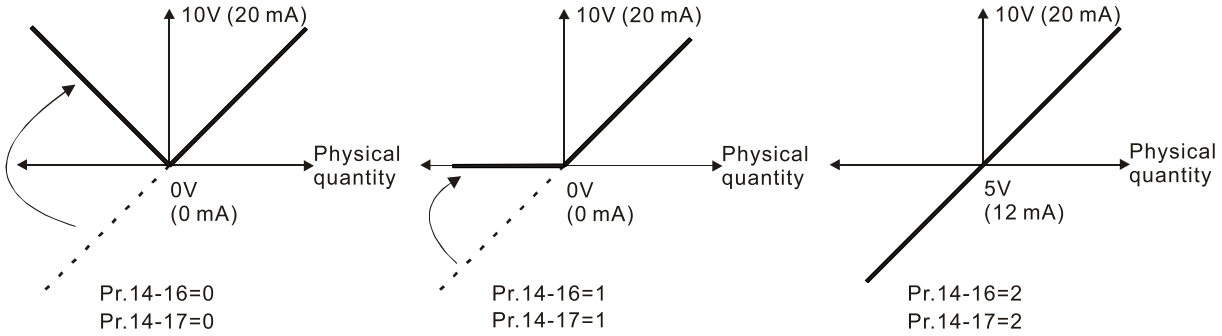

Selections for the analog output direction

14-18 Extension Card Input Selection (AI10)

Default: 0

Settings 0: 0–10 V (AVI10)
1: 0–20 mA (ACI10)
2: 4–20 mA (ACI10)

14-19 Extension Card Input Selection (AI11)

Default: 0

Settings 0: 0–10 V (AVI11)
1: 0–20 mA (ACI11)
2: 4–20 mA (ACI11)

When you change the input mode, verify that the external terminal switch (AI10, AI11) is in correct position.

14-20 AO10 DC Output Setting Level
14-21 AO11 DC Output Setting Level

Default: 0.00

Settings 0.00–100.00%

14-22 AO10 Filter Output Time
14-23 AO11 Filter Output Time

Default: 0.01

Settings 0.00–20.00 sec.

14-36 AO10 Output Selection
14-37 AO11 Output Selection

Default: 0

Settings 0: 0–10 V
1: 0–20 mA
2: 4–20 mA

12-2 Adjustment & Application

The followings are abbreviations for different types of motors:

- IM: Induction motor
- PM: Permanent magnet synchronous AC motor
- IPM: Interior permanent magnet synchronous AC motor
- SPM: Surface permanent magnet synchronous AC motor
- SynRM: Synchronous reluctance motor

12-2-1 Permanent-Magnet Synchronous Motor, Space Vector Control Adjustment Procedure (PM SVC, Pr.00-11 = 2)

(Applicable for CH2000 firmware version after V2.04)

I. Control diagram

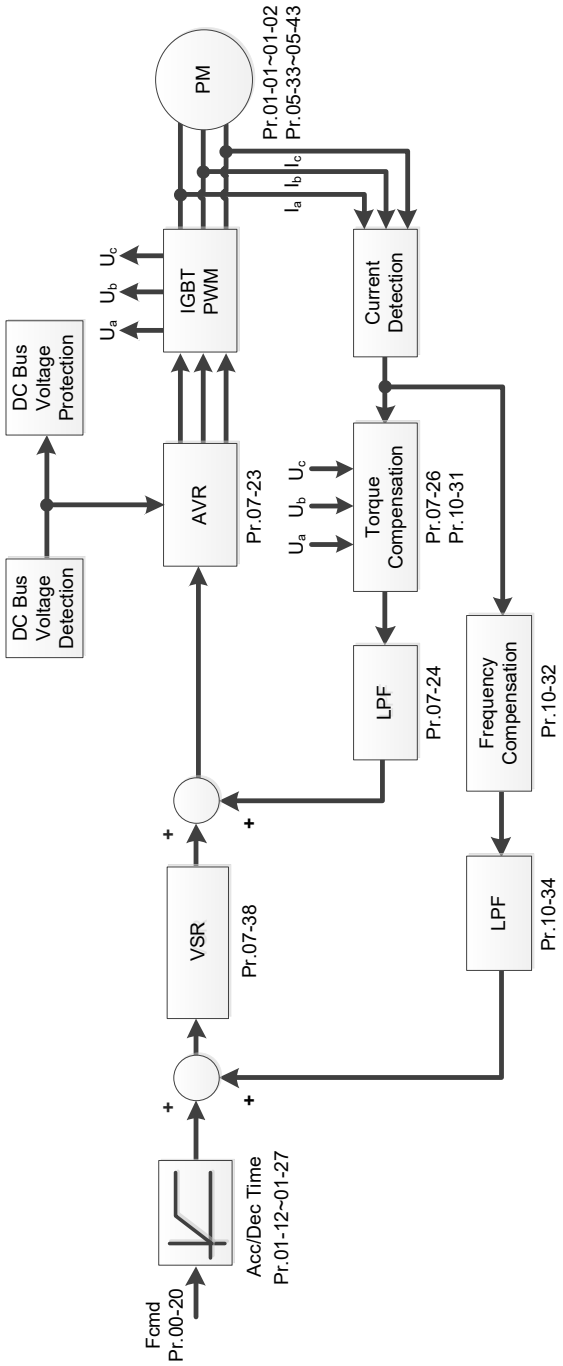

II. PM SVC adjustment procedure

NOTE: The number marked on the procedure corresponds to the number of following adjustment explanations)

(1) PM SVC motor parameters adjustment flowchart

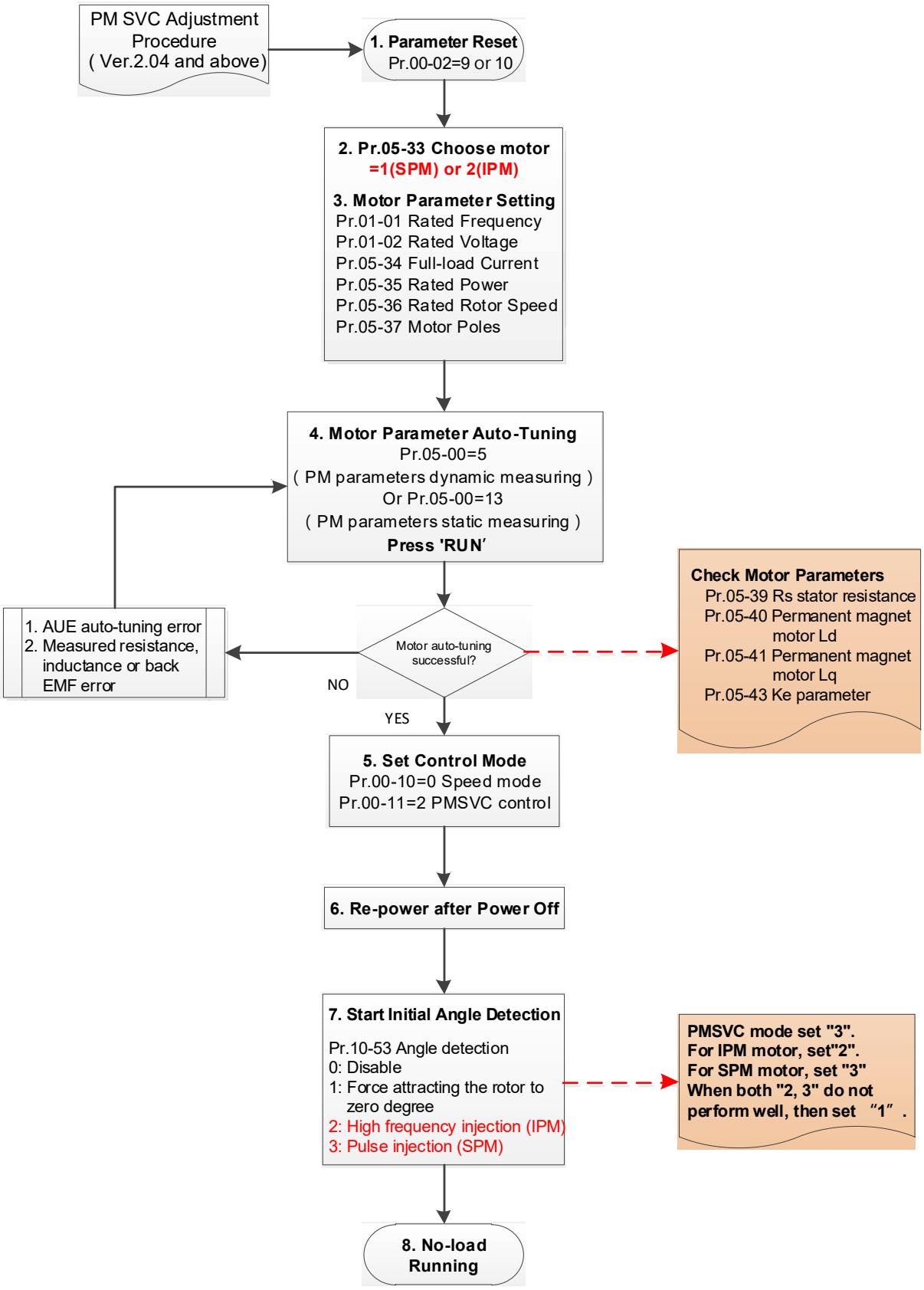

Basic motor parameters adjustment

1. Parameter reset:

   Reset Pr.00-02 = 9 (50 Hz) or 10 (60 Hz) to the default value.

2. Select PM motor type:

   Pr.05-33 = 1 (SPM) or 2 (IPM)

3. Motor nameplate parameter setting:

Parameter	Description
Pr.01-01	Rated frequency (Hz)
Pr.01-02	Rated voltage (V_{AC})
Pr.05-34	Rated current (A)
Pr.05-35	Rated power (kW)
Pr.05-36	Rated rotor speed (rpm)
Pr.05-37	Number of poles for the motor (poles)

4. PM parameter auto-tuning:

   Set Pr.05-00 = 5 (rolling auto-tuning for PM, with no load) or 13 (static auto-tuning for PM) and press RUN key to finish motor auto-tuning, then you will get the following parameters:

Parameter	Description
Pr.05-39	Stator resistance for a permanent magnet motor (Ω)
Pr.05-40	Permanent magnet motor Ld (mH)
Pr.05-41	Permanent magnet motor Lq (mH)
Pr.05-43	Ke parameter of a permanent magnet motor ($V_{phase \cdot rms}$ / krpm) (When Pr.05-00 = 5, the Ke parameter is measured based on the actual motor rotation.) (When Pr.05-00 = 13, the Ke parameter is automatically calculated based on the motor power, current and rotor speed.)

   If an auto-tuning error (AUE) occurs, refer to Chapter 14 “Fault Codes and Descriptions” for further treatment.

AUE Error (code)	Description
AUE (40)	Auto-tuning error
AUE1 (142)	Auto-tuning error 1 (No feedback current error)
AUE2 (143)	Auto-tuning error 2 (Motor phase loss error)

5. Set control mode

   Control mode for the drive: Pr.00-10 = 0: Speed mode

   Control mode for the motor: Pr.00-11 = 2: PM SVC mode

6. Re-power on after power off.

7. Measure the initial magnetic pole angle of PM

   Set Pr.10-53 PM initial rotor position detection method

   0: Disabled

   1: Force attracting the rotor to zero degrees

   2: High frequency injection

   3: Pulse injection

   (For IPM, the setting value is suggested to be 2; for SPM, the setting value is suggested to be 3. You can choose the setting 1 if the result is not good of setting as 2 or 3.)

(2) PM SVC adjustment flowchart for operation with no load / light load

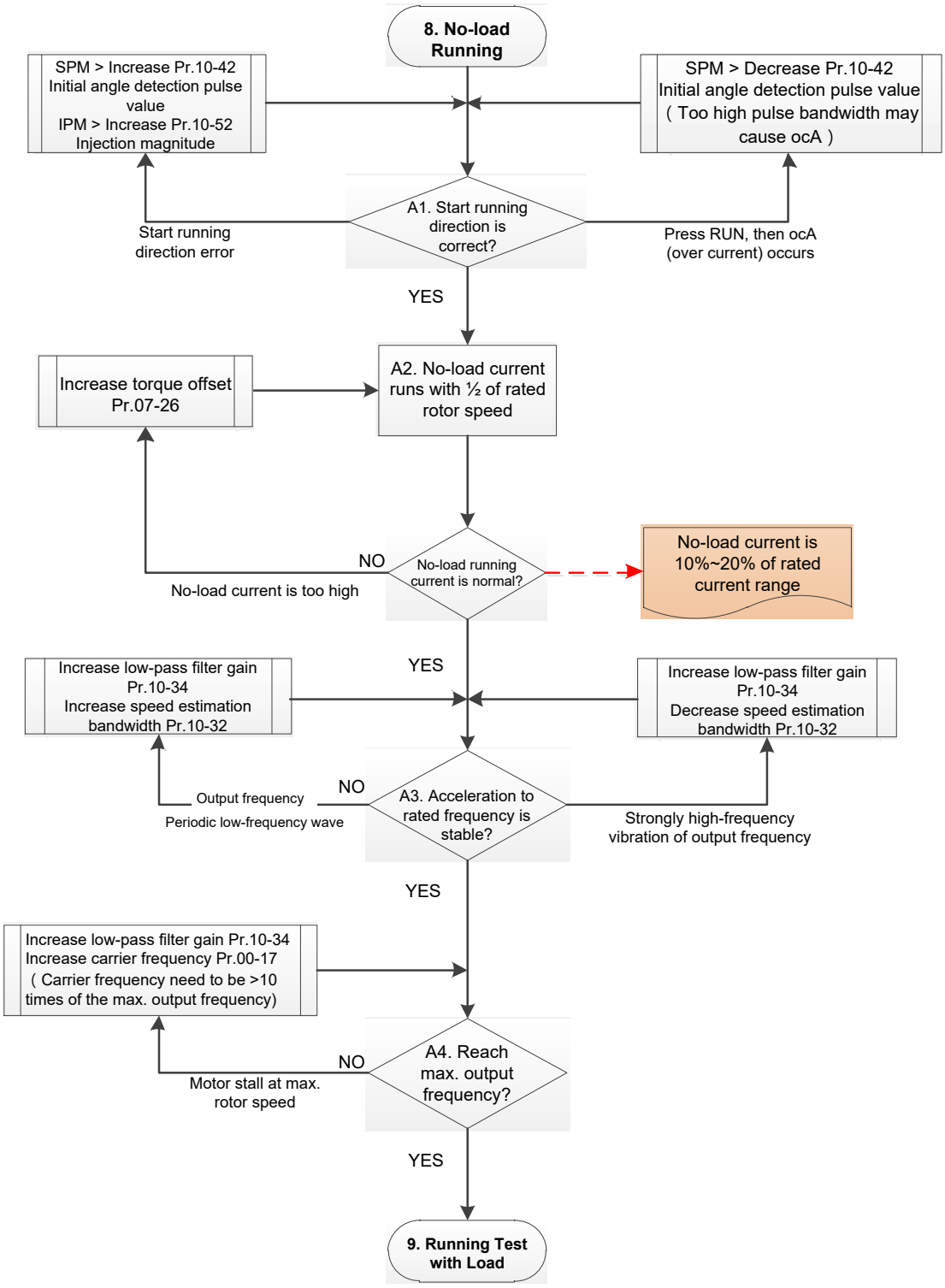

📖 Adjustment for operation with light load

8. Start the motor without load / with light load and operate to 1/2 of the rated rotor speed

A1. Start operation direction:

a. If the start operation direction is wrong
SPM: increase the current proportion for Pr.10-42 (initial angle detection pulse value) to improve the accuracy of the angle detection.
IPM: Increase the voltage for Pr.10-52 (injection magnitude) to improve the accuracy of the angle detection.

b. If an ocA error occurs when pressing RUN to start the motor, decrease the current proportion for Pr.10-42 (initial angle detection pulse value).

A2. Operates the motor in 1/2 of the rated rotor speed, adjust the no-load operating current
If the no-load operating current exceeds 20% of the rated current, increase Pr.07-26 (torque compensation gain) and observe the no-load operating current.

A3. Accelerate to the rated frequency and observe if the motor operates stably.

a. If the motor output rotor speed presents periodic low-frequency wave, increase Pr.10-34 (PM sensorless speed estimator low-pass filter gain), or increase Pr.10-32 (PM FOC sensorless speed estimator bandwidth).

b. If the output frequency reflects high frequency vibration, decrease Pr.10-34 or decrease Pr.10-32.

A4. Accelerate the motor to the maximum rotor speed, and observe if it operates stably.
If the motor stalls when accelerating to the maximum rotor speed, then increase Pr.10-34 (PM sensorless speed estimator low-pass filter gain), or increase Pr.00-17 (carrier frequency, you must set the carrier frequency larger than 10 times of the maximum output frequency)

(3) PM SVC adjustment flowchart for operation starts with load

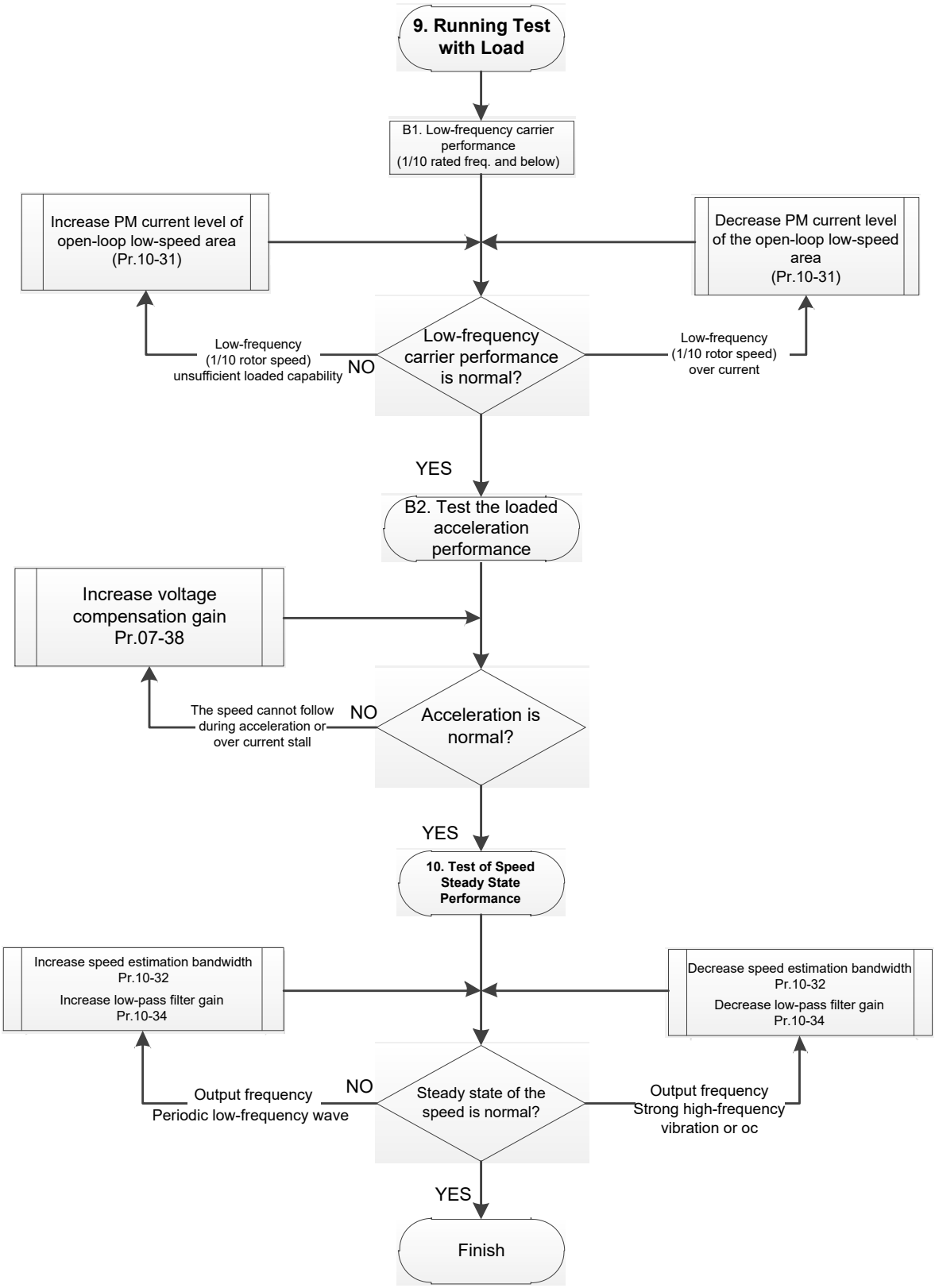

📖 Adjustment for operation with heavy load

9. Load operating test

B1. Low-frequency loading performance is below 1/10 of rated frequency:

a. If the low-frequency loading performance is insufficient, or the rotor speed is not smooth, increase Pr.10-31 (current command of I/F mode).

b. If the low-frequency current is large, decrease Pr.10-31 (current command of I/F mode).

B2. Test the with-load accelerating performance:

When the motor operates in 1/10 of rotor speed and above, if the speed cannot follow the acceleration time during accelerating, or the current stalls, increase Pr.07-38 (PMSVC voltage feedback forward gain).

10. Stability test at constant speed operation: the motor operates stably at constant speed

a. If the motor output rotor speed presents periodic low-frequency wave, increase Pr.10-34 (PM sensorless speed estimator low-pass filter gain), or increase Pr.10-32 (PM FOC sensorless speed estimator bandwidth).

b. If the output frequency reflects high frequency vibration, decrease Pr.10-34 or decrease Pr.10-32.

- PM SVC related parameters

Refer to Section 12-1 Description of Parameter Settings for more details.

Parameter	Description	Unit	Default	Setting Range
Pr.07-24	Torque command filter time	sec.	0.500	0.001–10.000
Pr.07-26	Torque compensation gain	NA	0	0–5000
Pr.07-38	PMSVC voltage feedback forward gain	NA	1.0	0.00–2.00
Pr.10-31	I/F mode, current command	%	40	0–150
Pr.10-32	PM FOC sensorless speed estimator bandwidth (high speed)	Hz	5.00	0.00–600.00
Pr.10-34	PM sensorless speed estimator low-pass filter gain	NA	1.00	0.00–655.35
Pr.10-39	Frequency point to switch from I/F mode to PM sensorless mode	Hz	20.00	0.00–599.00
Pr.10-40	Frequency point to switch from PM sensorless mode to V/F mode	Hz	20.00 / 40.00	0.00–599.00 / 30.00–599.00
Initial Angle Estimating Parameters				
Pr.10-42	Initial angle detection pulse value	NA	1.0	0.0–3.0
Pr.10-51	Injection frequency	Hz	500	0–1200
Pr.10-52	Injection magnitude	V	15.0 / 30.0	0.0–200.0
Pr.10-53	PM initial rotor position detection method 0: Disable 1: Force attracting the rotor to zero degrees 2: High frequency injection 3: Pulse injection	NA	0	0–3

12-2-2 Permanent-Magnet Synchronous Motor, Field-Oriented Control and with Encoder Adjustment Procedure (PM FOCPG, Pr.00-11 = 4)

(Applicable for CH2000 firmware version after V2.05)

I. Control diagram

(1) PM FOCPG control diagram

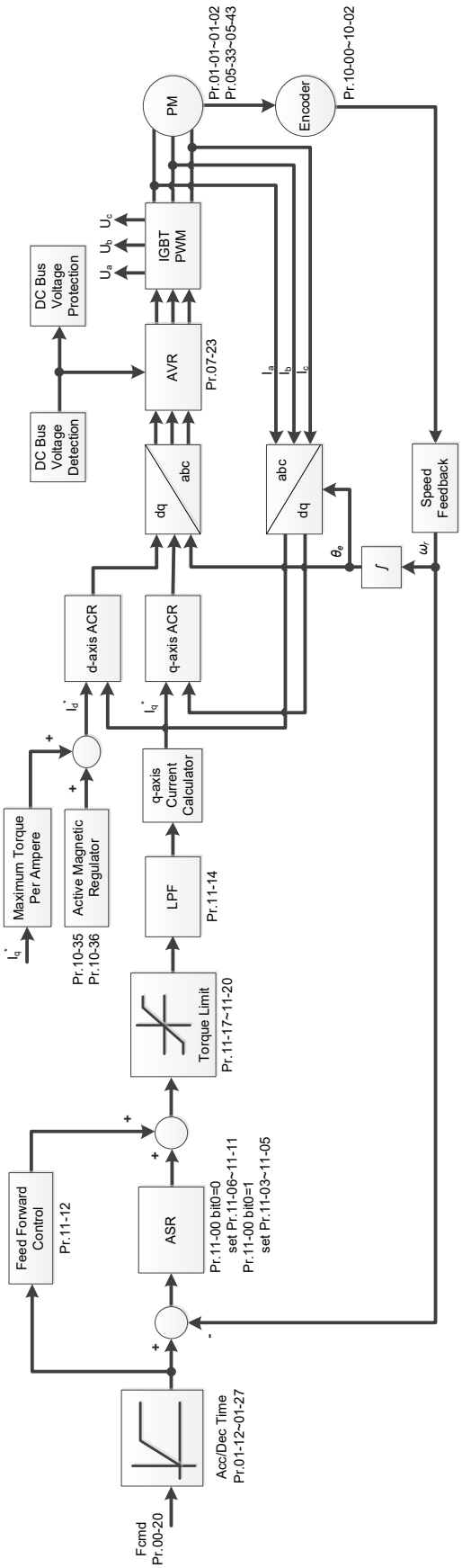

(2) PM TQCPG control diagram

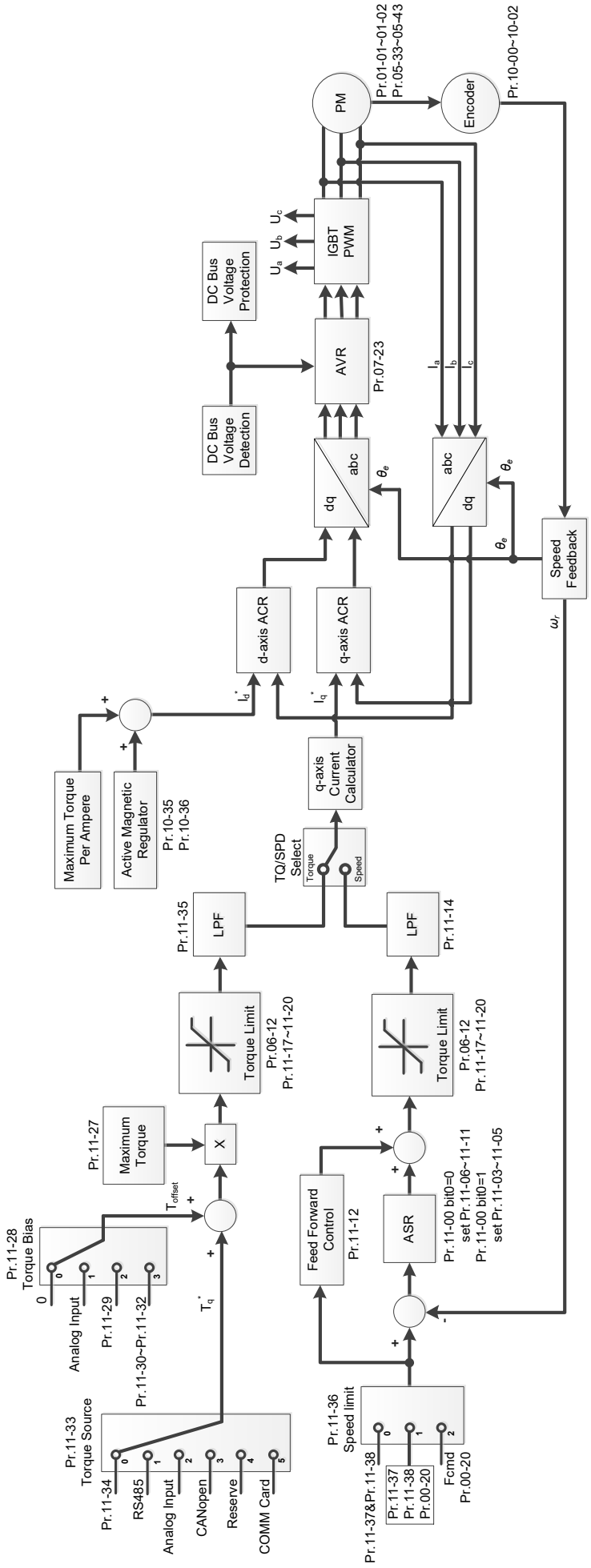

II. PM FOCPG adjustment procedure

NOTE: The number marked on the procedure corresponds to the number of following adjustment explanations

(1) PM FOCPG motor parameters adjustment flowchart

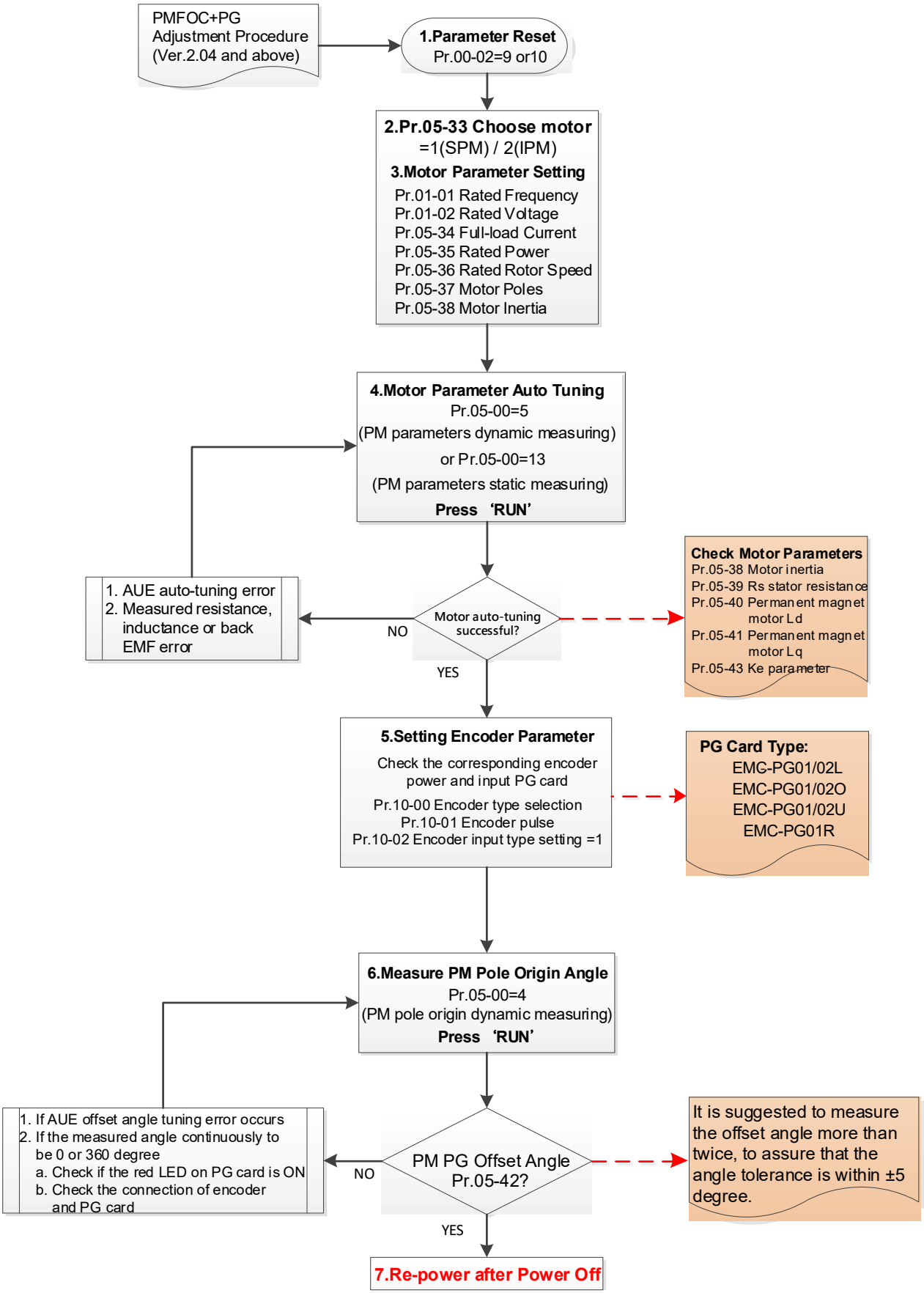

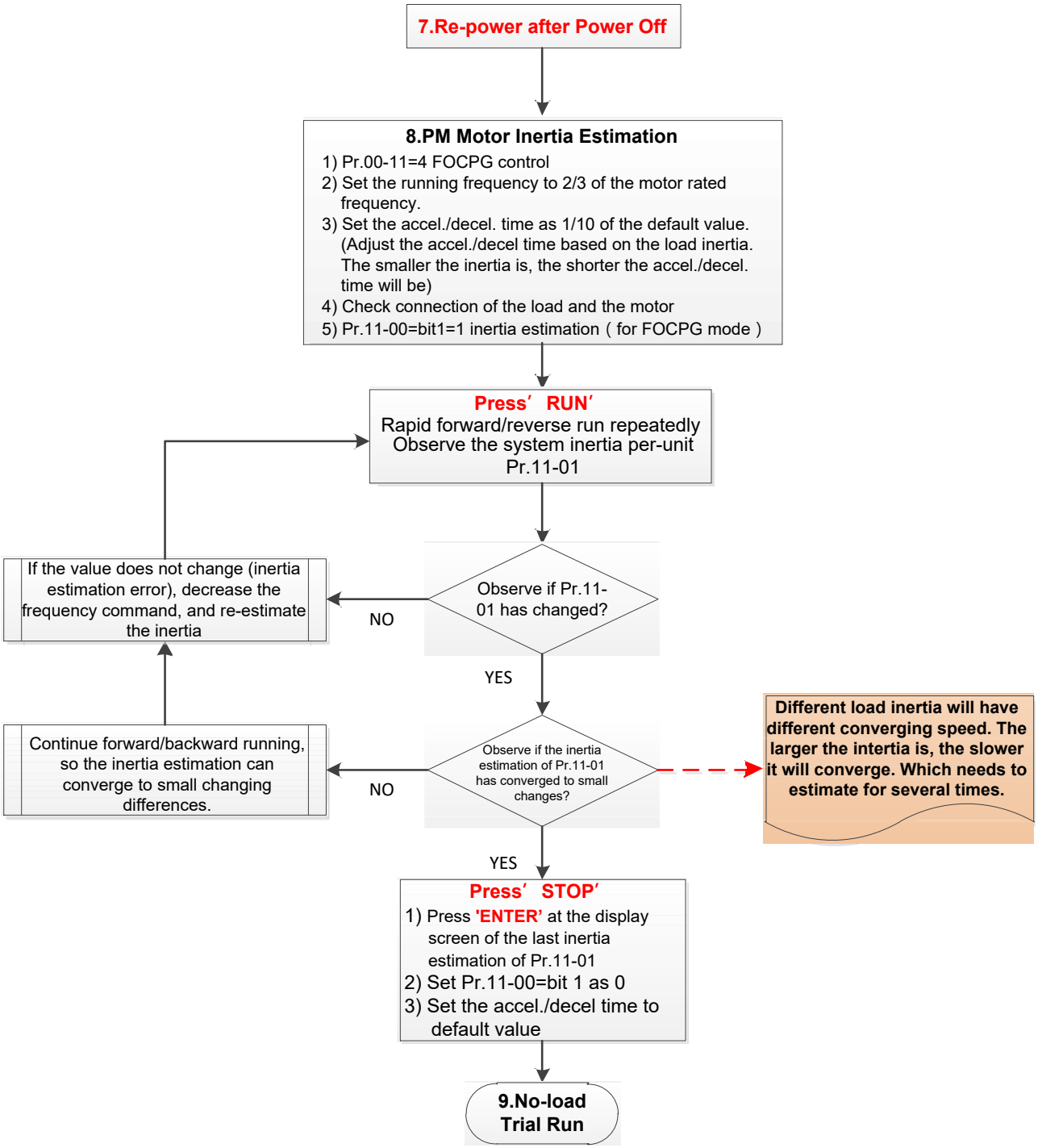
7.Re-power after Power Off
8.PM Motor Inertia Estimation
1) Pr.00-11=4 FOCPG control
2) Set the running frequency to 2/3 of the motor rated frequency.
3) Set the accel./decel. time as 1/10 of the default value. (Adjust the accel./decel time based on the load inertia. The smaller the inertia is, the shorter the accel./decel. time will be)
4) Check connection of the load and the motor
5) Pr.11-00=bit1=1 inertia estimation (for FOCPG mode)
Press' RUN'
Rapid forward/reverse run repeatedly
Observe the system inertia per-unit Pr.11-01
Observe if Pr.11-01 has changed?
NO
If the value does not change (inertia estimation error), decrease the frequency command, and re-estimate the inertia
YES
Observe if the inertia estimation of Pr.11-01 has converged to small changes?
NO
Continue forward/backward running, so the inertia estimation can converge to small changing differences.
Different load inertia will have different converging speed. The larger the intertia is, the slower it will converge. Which needs to estimate for several times.
YES
Press' STOP'
1) Press 'ENTER' at the display screen of the last inertia estimation of Pr.11-01
2) Set Pr.11-00=bit 1 as 0
3) Set the accel./decel time to default value
9.No-load Trial Run

📖 Basic motor parameters adjustment

1. Parameter reset:

   Reset Pr.00-02 = 9 (50 Hz) or 10 (60 Hz) to the default value.

2. Select IPM motor type:

   Pr.05-33 = 1 (SPM) or 2 (IPM)

3. Motor nameplate parameter setting:

Parameter	Description
Pr.01-01	Rated frequency (Hz)
Pr.01-02	Rated voltage (V_{AC})
Pr.05-33	PM motor type (IPM or SPM)
Pr.05-34	Rated current (A)
Pr.05-35	Rated power (kW)
Pr.05-36	Rated rotor speed (RPM)
Pr.05-37	Number of poles for the motor (poles)
Pr.05-38	PM motor inertia

4. PM parameter auto-tuning:

   Set Pr.05-00 = 5 (rolling auto-tuning for PM, with no load) or 13 (static auto-tuning for PM) and press RUN key to finish motor auto-tuning, then you will get the following parameters:

Parameter	Description
Pr.05-39	Stator resistance for a permanent magnet motor (Ω)
Pr.05-40	Permanent magnet motor Ld (mH)
Pr.05-41	Permanent magnet motor Lq (mH)
Pr.05-43	Ke parameter of a permanent magnet motor ($V_{phase \cdot rms}$ / krpm) (When Pr.05-00 = 5, the Ke parameter is measured based on the actual motor rotation.) (When Pr.05-00 = 13, the Ke parameter is automatically calculated based on the motor power, current and rotor speed.)

   If an auto-tuning error (AUE) occurs, refer to Chapter 14 “Error Codes and Descriptions” for further treatment.

AUE Error (code)	Description
AUE (40)	Auto-tuning error
AUE1 (142)	Auto-tuning error 1 (No feedback current error)
AUE2 (143)	Auto-tuning error 2 (Motor phase loss error)
AUE3 (144)	Auto-tuning error 3 (No-load current I_0 measuring error)
AUE4 (148)	Auto-tuning error 4 (Leakage inductance Lsigma measuring error)

5. Set encoder parameter

   Check the encoder power and input type, make sure it is used with correct PG card.

PG Card Type			
EMC-PG01L	EMC-PG01O	EMC-PG01U	EMC-PG01R
EMC-PG02L	EMC-PG02O	EMC-PG02U	-

   Related parameters:

   (1) Pr.10-00: Encoder type selection

   (2) Pr.10-01: Encoder pulses per revolution

   (3) Pr.10-02: Encoder input type setting = 1 (A-phase and B-phase are pulse inputs, forward direction if A-phase leads B-phase by 90 degrees)

6. Measure the initial magnetic pole angle of PM
   (1) Set Pr.05-00 = 4 (dynamic test for PM magnetic pole)
   (2) Press RUN key to proceed the PM magnetic pole measurement, and to get the offset angle.

   NOTE:

   a. It is suggested to measure the offset angle more than twice, to make sure the angle tolerance is within ±5 degree.
   b. If a fault occurs on the offset angle of magnetic pole (display: AUE), or the measured angle is still 0 degree or 360 degrees without any changes, then:
      (a) Check the LED light on PG card if it is red. Red light means the feedback signals are wrong.
      (b) Check the encoder and PG card are connected in the right order.
7. Re-power on after power off.
8. Execute inertia estimation for PM
   (1) Set Pr.00-11 = 4, PM FOCPG control.
   (2) Set the operation frequency command to 2/3 of the motor's rated frequency.
   (3) Set the acceleration / deceleration time (Pr.01-12, Pr.01-13) to 1/10 of the default time. (adjust the acceleration / deceleration time according to the load inertia. The smaller the load inertia, the shorter the acceleration / deceleration time is set).
   (4) Check if the load and the motor is connected.
   (5) Set Pr.11-00 bit1 = 1, inertia estimate (only in FOCPG mode).
   (6) Press RUN key to proceed the inertia
   Quickly run the motor in forward and reverse direction repeatedly, and observe the inertia estimated value of Pr.11-01 for the keypad.
      a. If the system inertial estimated value of Pr.11-01 does not change (= default 256), it means the inertia estimation is wrong. Reduce the frequency command and estimate the inertia again.
      b. If the system inertia estimated value of Pr.11-01 is still a lot different from the estimated value of FWD / REV operation, continue the estimation in forward / reverse operating direction to restraint the estimated inertia to small difference.
   (7) Press STOP key to obtain the estimated inertia value:
      a. Press ENTER to confirm the input value at the displayed page of the last estimated inertia value of Pr.11-01.
      b. Set Pr.11-01 bit1 = 0, return the control mode to speed mode.
      c. Set the acceleration / deceleration time (Pr.01-12, 01-13) back to the default value.

(2) PM FOC+PG adjustment flowchart for operation without load / with light load

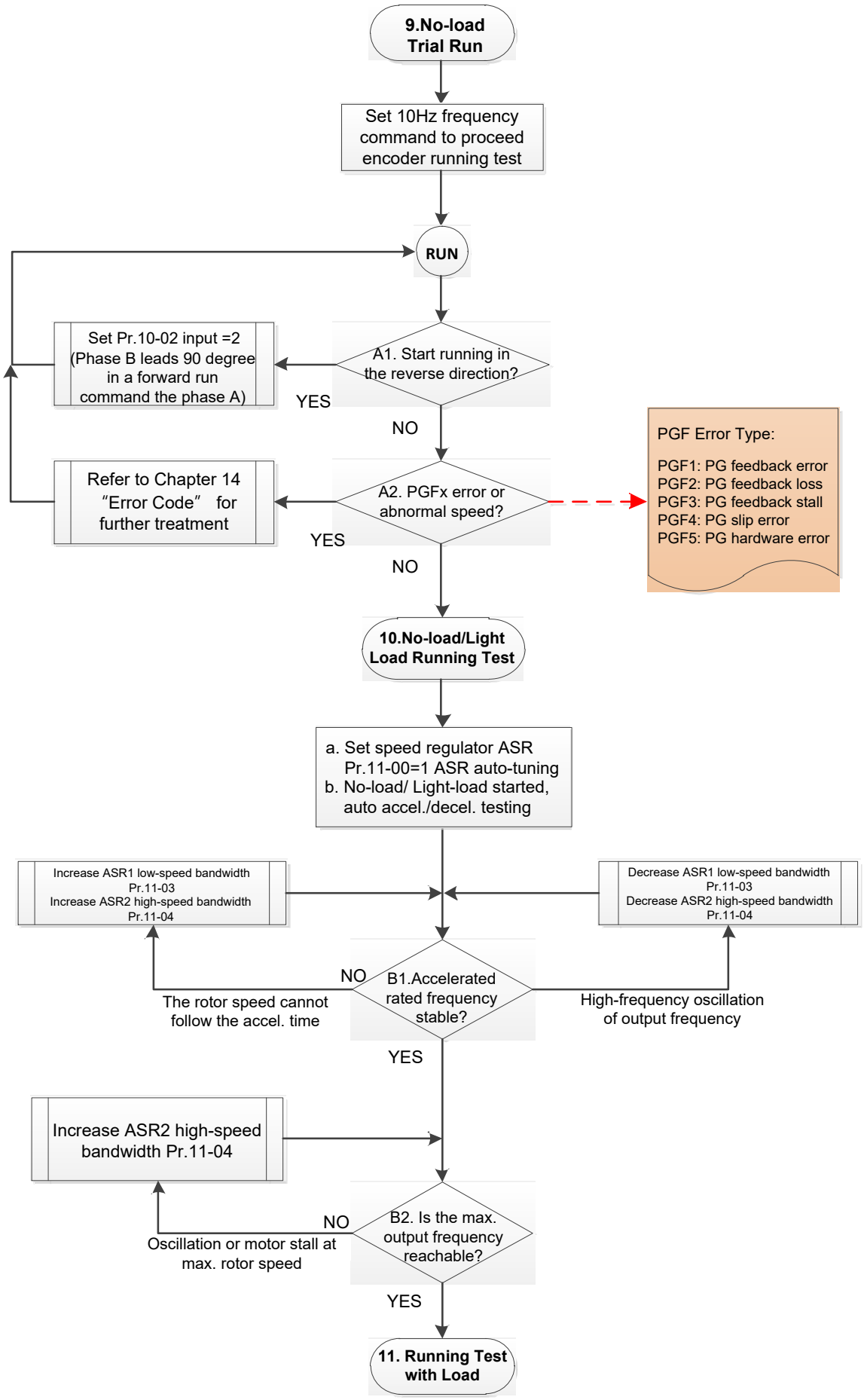

Adjustment for operation with no load / light load

9. No-load trial run

Set the frequency command to 10 Hz to proceed the encoder running test:

A1. If the motor starts in a reverse direction.

If the motor starts in a reverse direction, set the encoder input type Pr. 10-02 = 2 (A-phase

and B-phase are pulse inputs, forward direction if B-phase leads A-phase by 90 degrees.)

A2. Observe if a PGFx error is displayed on the keypad, or the motor runs in an abnormal speed.

If the PGFx error is displayed or the motor runs in an abnormal speed, refer to Chapter 14 “Fault Codes and Descriptions” or the following table for PGFx error type and further treatment.

PGF Error (code)	Description	Solution
PGF1 (42)	PG feedback error	Check parameter setting of Pr.10-00–10-02
PGF2 (43)	PG feedback loss	Check the wiring of encoder and PG card
PGF3 (44)	PG feedback stall	Check the wiring of encoder and PG card
PGF4 (45)	PG slip error	Check the pulse setting of Pr.10-01 Check the wiring of encoder and PG card
PGF5 (65)	PG hardware error	Check if the PG card is installed on the correct slot position Check the setting parameter of the encoder

10. No-load / light load running test

a. Set the speed regulator (ASR) as Pr.11-00 = 1, and set the ASR gain as auto-tuning.

b. Start the motor with no load / light load and proceed acceleration / deceleration test.

B1. Accelerate to the rated frequency and observe if the motor runs stably.

- If the output rotor speed cannot follow the acceleration time, increase Pr.11-04 (ASR2 high-speed bandwidth) or Pr.11-03 (ASR1 low-speed bandwidth).
- If a high-frequency oscillation occurs in the output frequency, decrease Pr.11-04 (ASR2 high-speed bandwidth) or Pr.11-03 (ASR1 low-speed bandwidth).

B2. Accelerate the motor to the maximum frequency and observe if it runs stably.

If an oscillation occurs or motor stalls at maximum rotor speed during operation, increase Pr.11-04 (ASR2 high-speed bandwidth) or Pr.00-17 (Carrier frequency).

Setting curve of speed regulator (ASR) and related parameter:

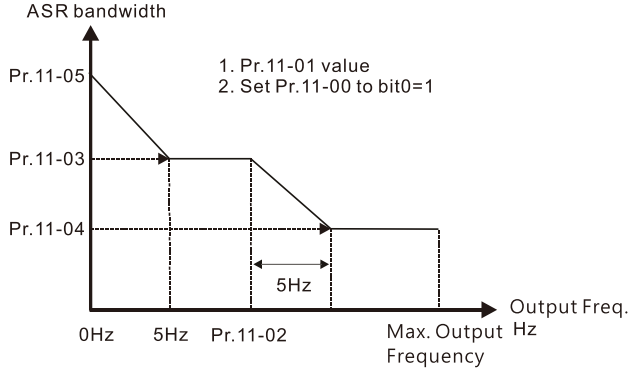

ASR adjustment- auto gain

Parameter	Description	Default
Pr.11-00	System control	0
Pr.11-01	Per unit of system inertia	256
Pr.11-02	ASR1/ASR2 switch frequency (it is suggested to set the switch frequency higher than Pr.10-39)	7.00 Hz
Pr.11-03	ASR1 low-speed bandwidth	10 Hz
Pr.11-04	ASR2 high-speed bandwidth	10 Hz
Pr.11-05	ASR zero-speed bandwidth	10 Hz

(3) PM FOCPG adjustment flowchart for operation starts with load

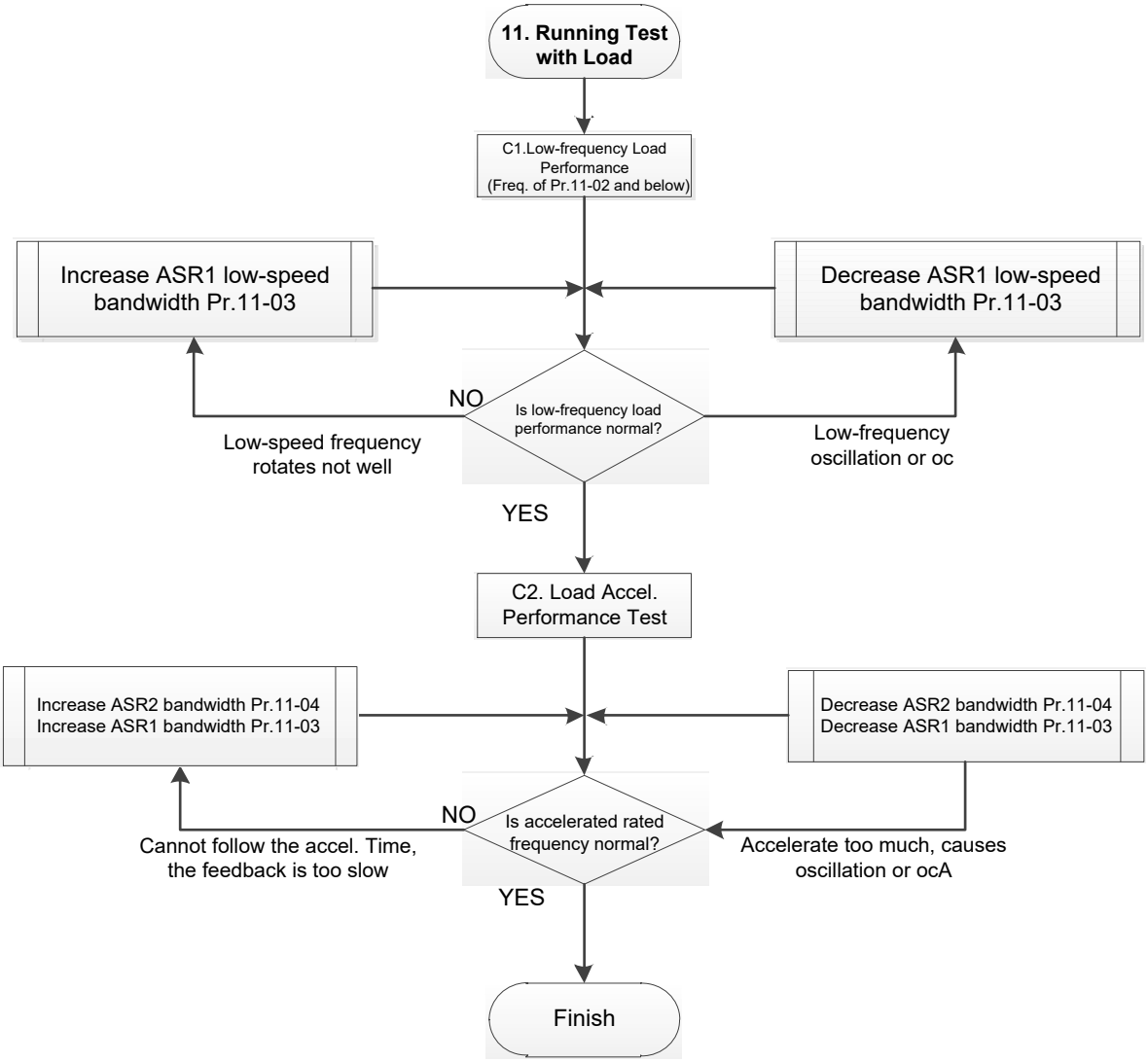

📖 Adjustment for operation with load

11. Running test with load

C1. Low-frequency load performance when the drive operates under ASR1 / ASR2 switch frequency (Pr.11-02):

a. If the low-speed frequency cannot start-up with load or the rotor speed is not smooth, increase Pr.11-03 (ASR1 low-speed bandwidth), or increase Pr.11-01 (Per-unit system inertia).

b. If an oscillation or over current (oc) error occurs at low-speed frequency, decrease Pr.11-03 (ASR1 low-speed bandwidth) or decrease Pr.11-01 (Per-unit system inertia).

C2. With-load accelerating performance testing in heavy-load status, accelerate the motor to the rated rotor speed according to the acceleration time.

- If the motor rotor speed cannot follow the acceleration time, and the response is too slow, increase Pr.11-04 (ASR2 high-speed bandwidth) and Pr.11-03 (ASR1 low-speed bandwidth); if the response speed is still not enough, increase 10% of the per-unit system inertia for Pr.11-01 each time.
- If an excessive acceleration causes an oscillation or ocA error, decrease Pr.11-04 (ASR2 high-speed bandwidth) and Pr.11-03 (ASR1 low-speed bandwidth).

- PM FOCPG adjustment parameters

Refer to Section 12-1 “Description of Parameter Settings” for detailed information.

Parameter	Description	Unit	Default	Setting Range
Encoder Setting Parameters				
Pr.10-00	Encoder type selection	N/A	0	0–8
Pr.10-01	Encoder pulses per revolution	ppr	600	1–65535
Pr.10-02	Encoder input type setting	N/A	0	0–5
Motor Performance Control Parameters				
Pr.11-00	System control	bit	0	0–8
Pr.11-01	Per-unit of system inertia	N/A	256	1–65535
Pr.11-02	ASR1 / ASR2 switch frequency	Hz	7	5.00–599
Pr.11-03	ASR1 low-speed bandwidth	Hz	10	1–100 (PM) 1–40 (IM)
Pr.11-04	ASR2 high-speed bandwidth	Hz	10	1–100 (PM) 1–40 (IM)
Pr.11-05	Zero-speed bandwidth	Hz	10	1–100 (PM) 1–40 (IM)

12-2-3 Induction Motor, Sensorless Field-Oriented Control Adjustment Procedure (IMFOC Sensorless, Pr.00-11 = 5)

I. Control diagram

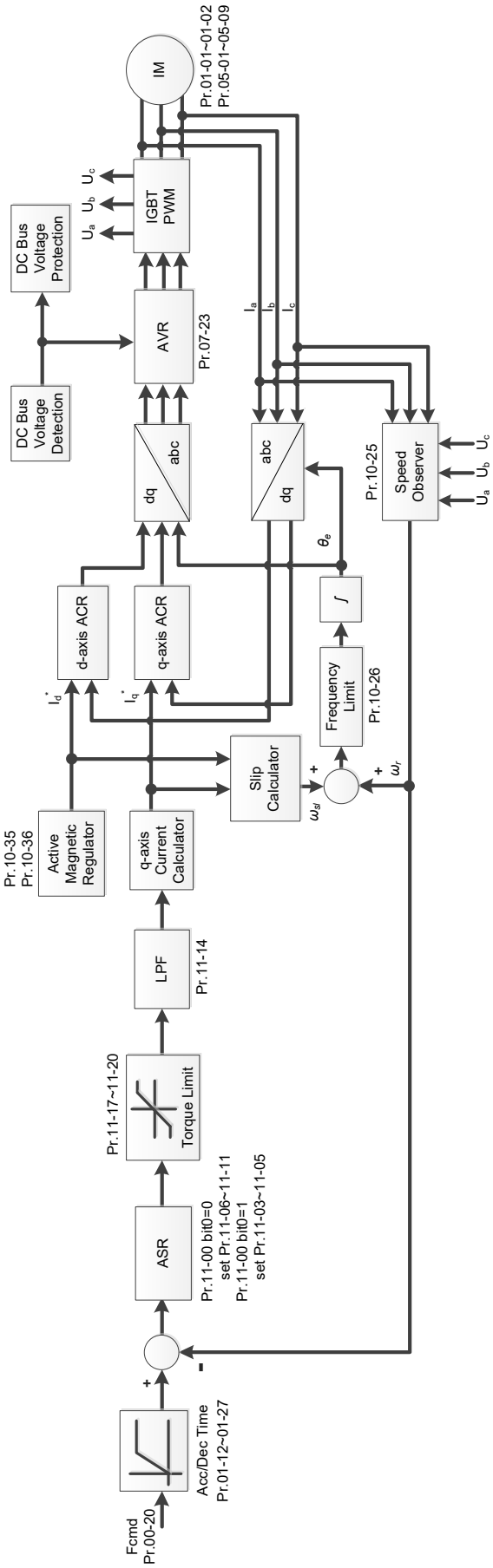

II. Adjustment procedure

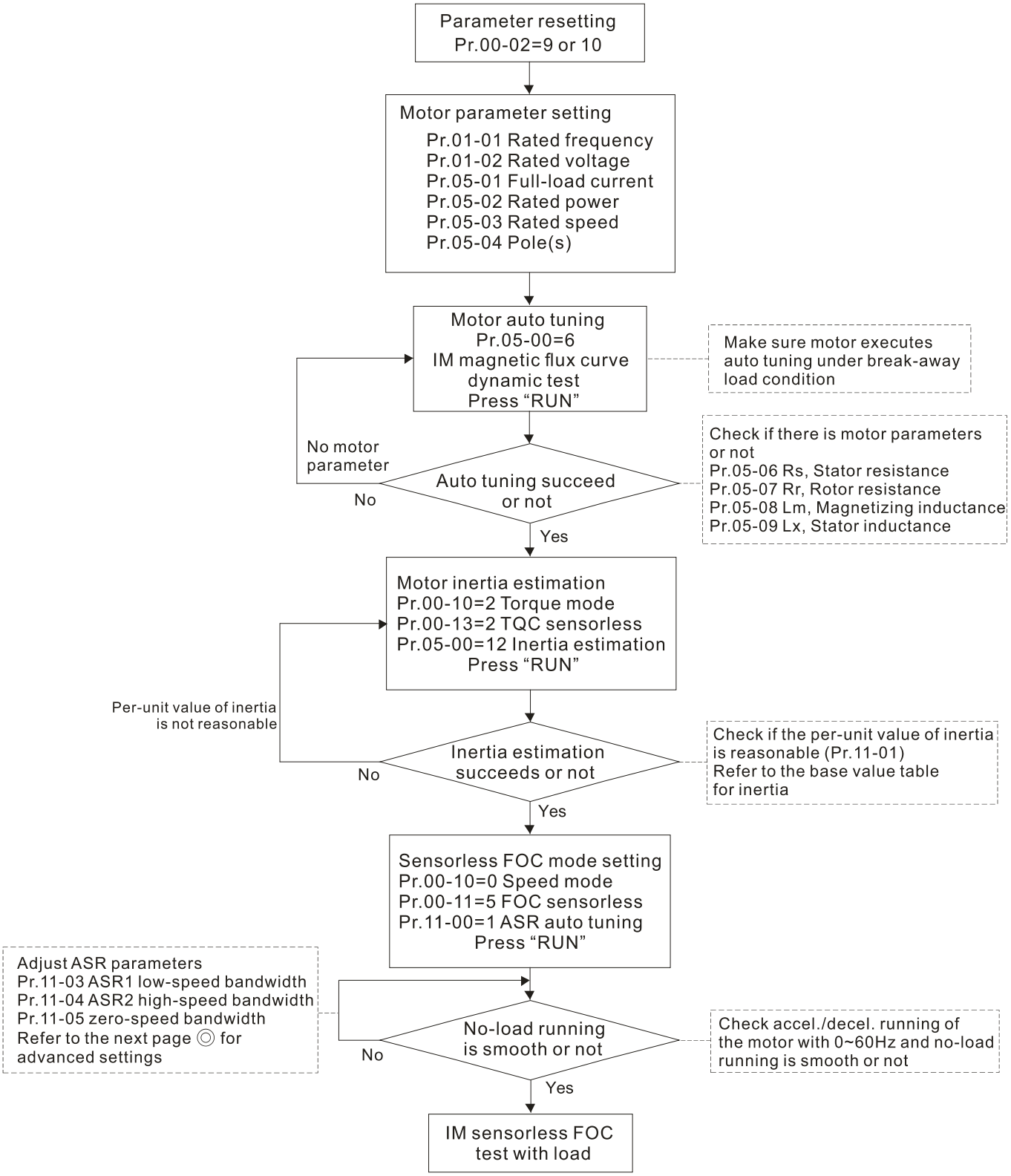

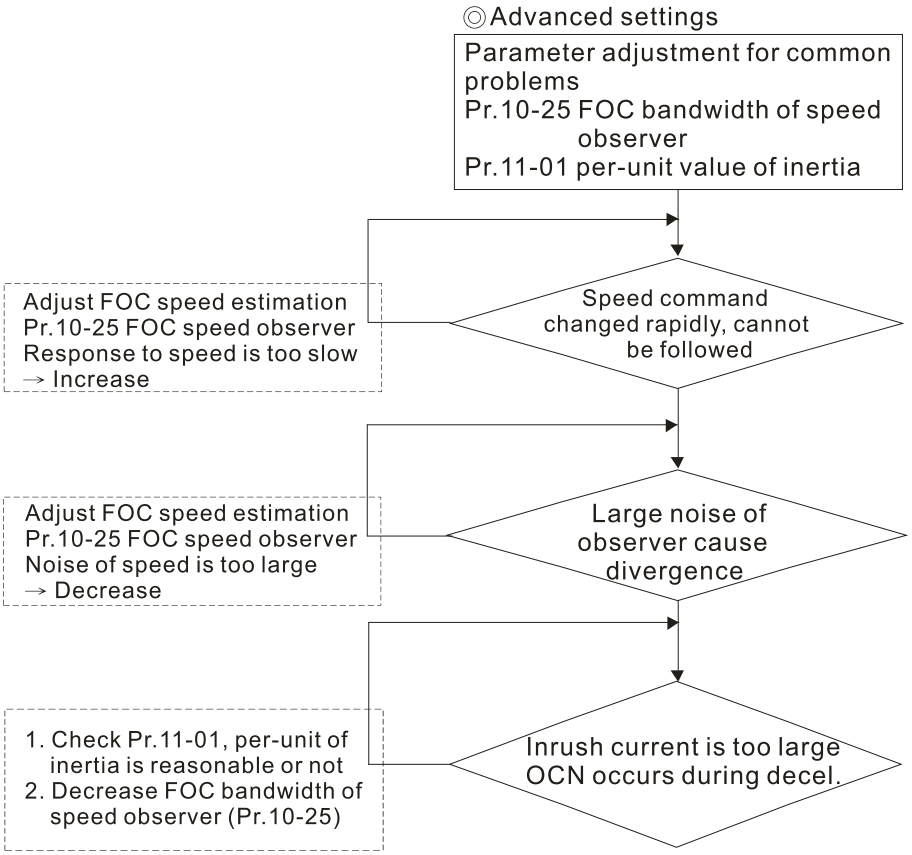

Basic motor parameters adjustment

1. Parameter reset:

   Reset Pr.00-02 = 9 (50 Hz) or 10 (60 Hz) to the default value.

2. Select PM motor type:

   Pr.05-33 = 0 (IM)

3. Motor nameplate parameter setting:

Parameter	Description
Pr.01-01	Rated frequency (Hz)
Pr.01-02	Rated voltage (V_{AC})
Pr.05-01	Full-load current for induction motor 1 (A)
Pr.05-02	Rated power for induction motor 1 (kW)
Pr.05-03	Rated speed for induction motor 1 (rpm)
Pr.05-04	Number of poles for induction motor 1 (poles)

4. Press RUN to start auto-tuning of IM magnetic flux curve dynamic test for Pr.05-00 = 1 or 6 (motor is running). Make sure the motor executes auto-tuning under break-away load condition. Check if there are motor parameters after auto-tuning.

Parameter	Description
Pr.05-06	Stator resistance (Rs) for induction motor 1 (Ω)
Pr.05-07	Rotor resistance (Rr) for induction motor 1 (Ω)
Pr.05-08	Magnetizing inductance (Lm) for induction motor 1 (mH)
Pr.05-09	Stator inductance (Lx) for induction motor 1 (mH)

If an auto-tuning error (AUE) occurs, refer to Chapter 14 “Fault Codes and Descriptions” for further treatment.

AUE Error (code)	Description
AUE (40)	Auto-tuning error
AUE1 (142)	Auto-tuning error 1 (No feedback current error)
AUE2 (143)	Auto-tuning error 2 (Motor phase loss error)
AUE3 (144)	Auto-tuning error 3 (No-load current I_0 measuring error)
AUE4 (148)	Auto-tuning error 4 (Leakage inductance Lsigma measuring error)

5. Execute inertia estimation for IM (optional), press RUN key to start the process.

   Set Pr.00-10 = 2, torque mode

   Set Pr.00-13 = 2, IM TQC sensorless

   Set Pr.05-00 = 12, FOC sensorless inertia estimation

   Check if the estimated value for Pr.11-01 is reasonable (refer to the explanation of Pr.11-00) when the inertia estimation process is finished, the base value table of inertia is as below (unit: kg-cm^2).

HP	kW	Inertia	HP	kW	Inertia	HP	kW	Inertia
1	0.7	2.3	30	22	176.5	215	160	2800.0
2	1.5	4.3	40	30	202.5	250	186	3550.0
3	2.2	8.3	50	37	355.5	300	224	5139.0
5	3.7	14.8	60	45	410.8	375	279	5981.0
7	5.5	26.0	75	56	494.8	425	317	5981.0
10	7.5	35.8	100	75	1056.5	475	354	5981.0
15	11	74.3	120	89	1275.3	600	447	5981.0
20	15	95.3	150	112	1900.0	650	485	5981.0
25	18	142.8	175	130	2150.0	750	559	5981.0

6. Execute IMFOC Sensorless mode, set up the following parameters:

   Set Pr.00-10 = 0, speed mode

   Set Pr.00-11 = 5, IMFOC Sensorless

   Set Pr.11-00 bit0 =1, use ASR gain auto-tuning

   Press RUN key and start the no load test. Accelerate the motor to the rated speed, and then decelerate to stop, check if the motor runs smoothly.

   - If the motor runs smoothly, then the setting for IMFOC Sensorless is completed.
   - If the motor does not run smoothly or fails to start at low frequency, then refer to the following steps for adjustment.

7. Select auto-tuning gain (Pr.11-00 bit0 = 1), adjust ASR parameters according to the speed response.

   Set Pr.11-00 bit0 = 1, use auto-tuning for ASR

   Set Pr.11-03 ASR1 low-speed bandwidth (When the acceleration of low-speed cannot follow the acceleration command, increase the low-speed bandwidth)

   Set Pr.11-04 ASR2 high-speed bandwidth (When the acceleration in high speed causes vibration or cannot follow the acceleration command, increase high-speed bandwidth)

   Set Pr.11-05 Zero-speed bandwidth (If the response of start-up is slow or incapable, increase zero-speed bandwidth)

   - The bigger the setting value for ASR bandwidth, the faster the response.
   - The low-speed bandwidth cannot be set too high, or the observer will diverge.

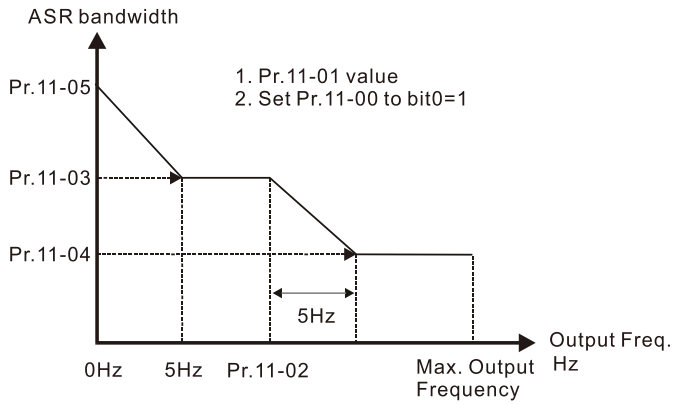

8. Adjust the setting of FOC speed observer and per-unit value of inertia (common problems)
   - Pr.10-25: Set up FOC bandwidth of speed observer
     Situation 1. Speed command changes rapidly, but speed response cannot follow.
     (Speed response is too slow→Increase the setting value)
     Situation 2. The noise of the observer is too large, and causes the operation diverged.
     (Speed noise is too large→Decrease)
   - Pr.11-01: Set up per unit of system inertia
     Situation 1. The inrush current is too high at start-up, and causes an oc error.
     Situation 2. An ocn error occurs during RUN or STOP, and the motor runs randomly.
     Check Pr.11-01 whether the JM per-unit of system inertia is too large.
     Decrease Pr.10-25 FOC bandwidth for speed observer or Pr.11-05 zero-speed bandwidth.

- IMFOC Sensorless adjustment parameters

  Refer to Section 12-1 Description of Parameter Settings for more details

Parameter	Description	Unit	Default	Settings
00-11	Speed control mode		0	0–8
01-01	Rated / base frequency (Hz)	Hz	60.00 / 50.00	0.00–599.00
01-02	Rated / base voltage (V_{AC})	V	Depending on the model power	Depending on the model power
05-00	Motor parameter auto-tuning		0	0–13
05-02	Rated power for induction motor 1 (kW)	kW	Depending on the model power	0.00–655.35
05-03	Rated speed for induction motor 1 (rpm)	rpm	Depending on the motor's number of poles	0–xxxx (Depending on the motor's number of poles)
05-04	Number of poles for induction motor 1 (poles)		4	2–64
05-05	No-load current for induction motor 1 (A)		Depending on the model power	0.00–Pr.05-01 default

Parameter	Description	Unit	Default	Settings
05-06	Stator resistance (Rs) for induction motor 1 (Ω)	Ω	Depending on the model power	0.000–65.535
05-07	Rotor resistance (Rr) for induction motor 1 (Ω)	Ω	0.000	0.000–65.535
05-08	Magnetizing inductance (Lm) for induction motor 1 (mH)	mH	0.0	0.0–6553.5
05-09	Stator inductance (Lx) for induction motor 1 (mH)	mH	0.0	0.0–6553.5
10-25	FOC bandwidth for speed observer	Hz	40.0	20.0–100.0
11-00	System control		513	0–65535
11-01	Per unit of system inertia	pu	256	1–65535
11-02	ASR1 / ASR2 switch frequency	Hz	7.00	5.00–599.00
11-03	ASR1 low-speed bandwidth	Hz	10	1–40 Hz (IM) / 1–100 Hz (PM)
11-04	ASR2 high-speed bandwidth	Hz	10	1–40 Hz (IM) / 1–100 Hz (PM)
11-05	Zero-speed bandwidth	Hz	10	1–40 Hz (IM) / 1–100 Hz (PM)

12-2-4 Permanent-Magnet Synchronous, Sensorless Field-Oriented Control Adjustment Procedure (PM Sensorless, Pr.00-11 = 6)

(Applicable for CH2000 firmware version after V2.04)

I. Control diagram

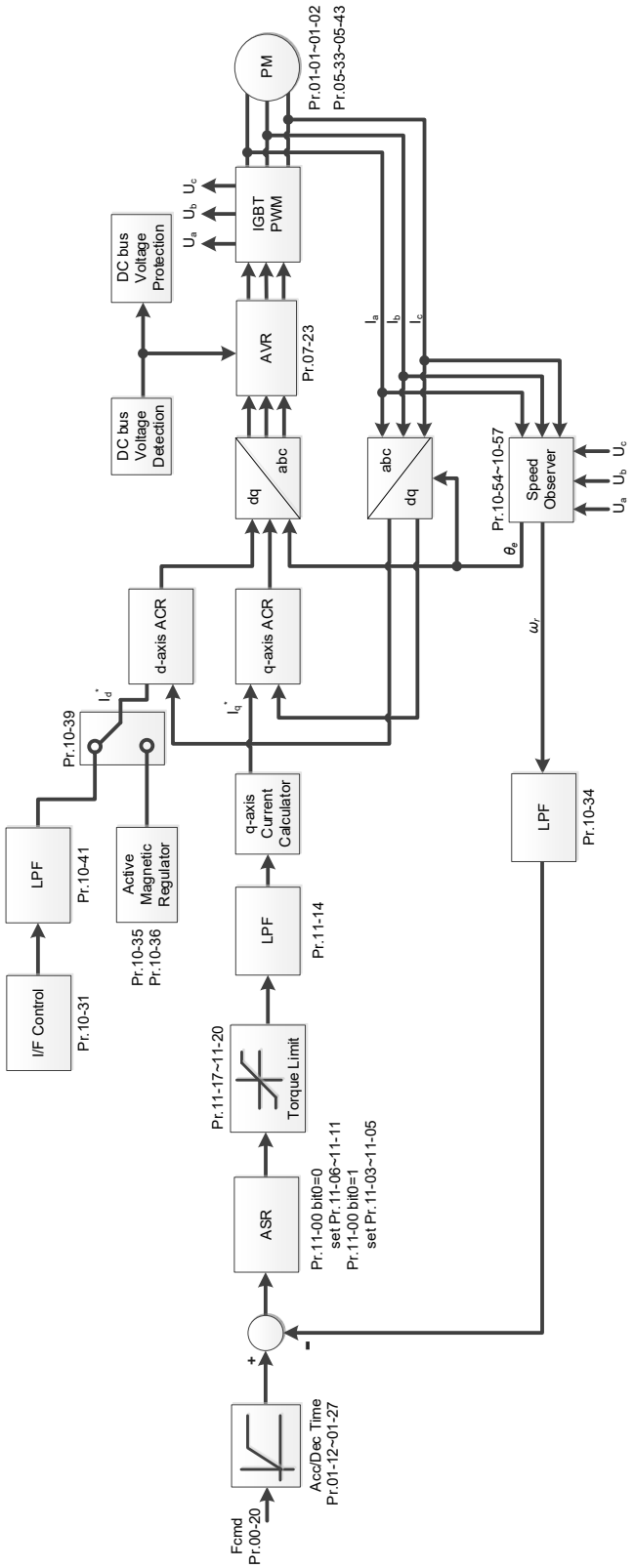

NOTE: PMFOC Sensorless control is the control method dedicated for PM; it uses the high salient pole characteristic of PM to detect positions of NS magnetic poles. By doing this, it calculates the motor's rotor position at low-speed frequency.

II. PM Sensorless adjustment procedure

NOTE: The number marked on the procedure corresponds to the number of following adjustment explanations.

(1) PM Sensorless motor parameters adjustment flowchart

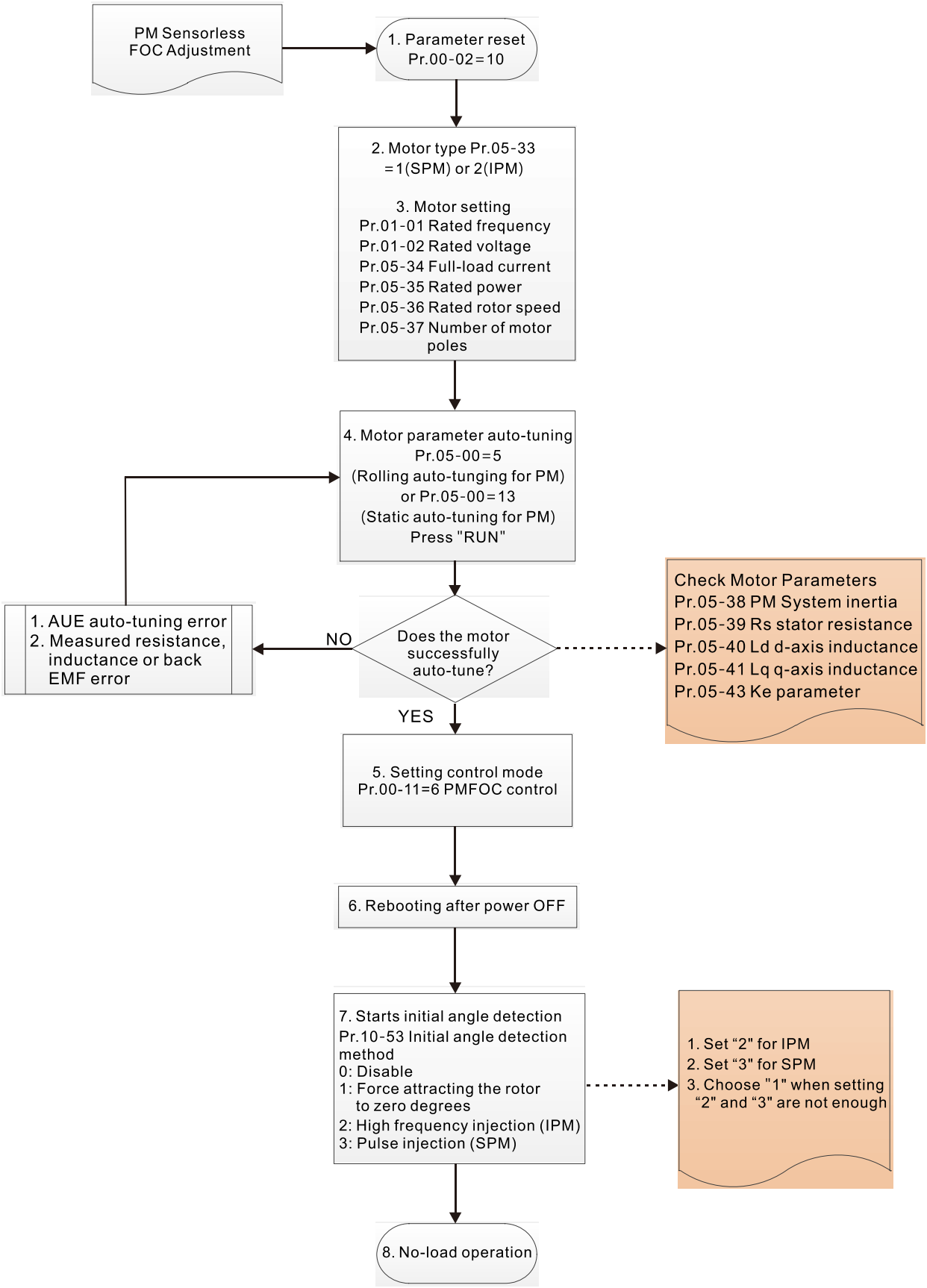

Motor parameters adjustment

1. Parameter reset:

   Reset Pr.00-02 = 10 to the default value.

2. Select motor type:

   Pr.05-33 = 1 or 2 (SPM or IPM)

3. Motor nameplate parameter setting:

Parameter	Description
Pr.01-01	Rated frequency (Hz)
Pr.01-02	Rated voltage (V_{AC})
Pr.05-34	Rated current (A)
Pr.05-35	Rated power (kW)
Pr.05-36	Rated rotor speed (rpm)
Pr.05-37	Number of motor poles (poles)
Pr.05-38	System inertia for PM (kg-cm^2)

4. PM parameter auto-tuning:

   Set Pr.05-00 = 5 (rolling auto-tuning for PM, with no load) or 13 (static auto-tuning for PM) and press RUN key to finish motor auto-tuning, then you will get the following parameters:

Parameter	Description
Pr.05-39	Stator resistance for a permanent magnet motor (Ω)
Pr.05-40	Permanent magnet motor Ld (mH)
Pr.05-41	Permanent magnet motor Lq (mH)
Pr.05-43	Ke parameter of a permanent magnet motor ($V_{phase \cdot rms}$ / krpm) (When Pr.05-00 = 5, the Ke parameter is measured based on the actual motor rotation.) (When Pr.05-00 = 13, the Ke parameter is automatically calculated based on the motor power, current and rotor speed.)

   If an auto-tuning error (AUE) occurs, refer to Chapter 14 “Error Codes and Descriptions” for further treatment.

AUE Fault code	Description
AUE (40)	Auto-tuning error
AUE 1 (142)	Auto-tuning error 1 (no feedback current error)
AUE 2 (143)	Auto-tuning error 2 (motor phase loss error)

5. Set control mode

   Set Pr.00-11 = 6 PM Sensorless FOC control mode

6. After auto-tuning, re-power on after power off.

7. Measure the initial magnetic pole angle of PM

   Set Pr.10-53 PM initial rotor position detection method:

   0: Disabled

   1: Force attracting the rotor to zero degrees (Pr.10-31)

   2: High frequency injection

   3: Pulse injection

   (For IPM, the setting value is suggested to be 2; for SPM, the setting value is suggested to be 3. You can choose the setting 1 if the result is not good of setting as 2 or 3.)

(2) PM Sensorless adjustment flowchart for operation without load / with light load

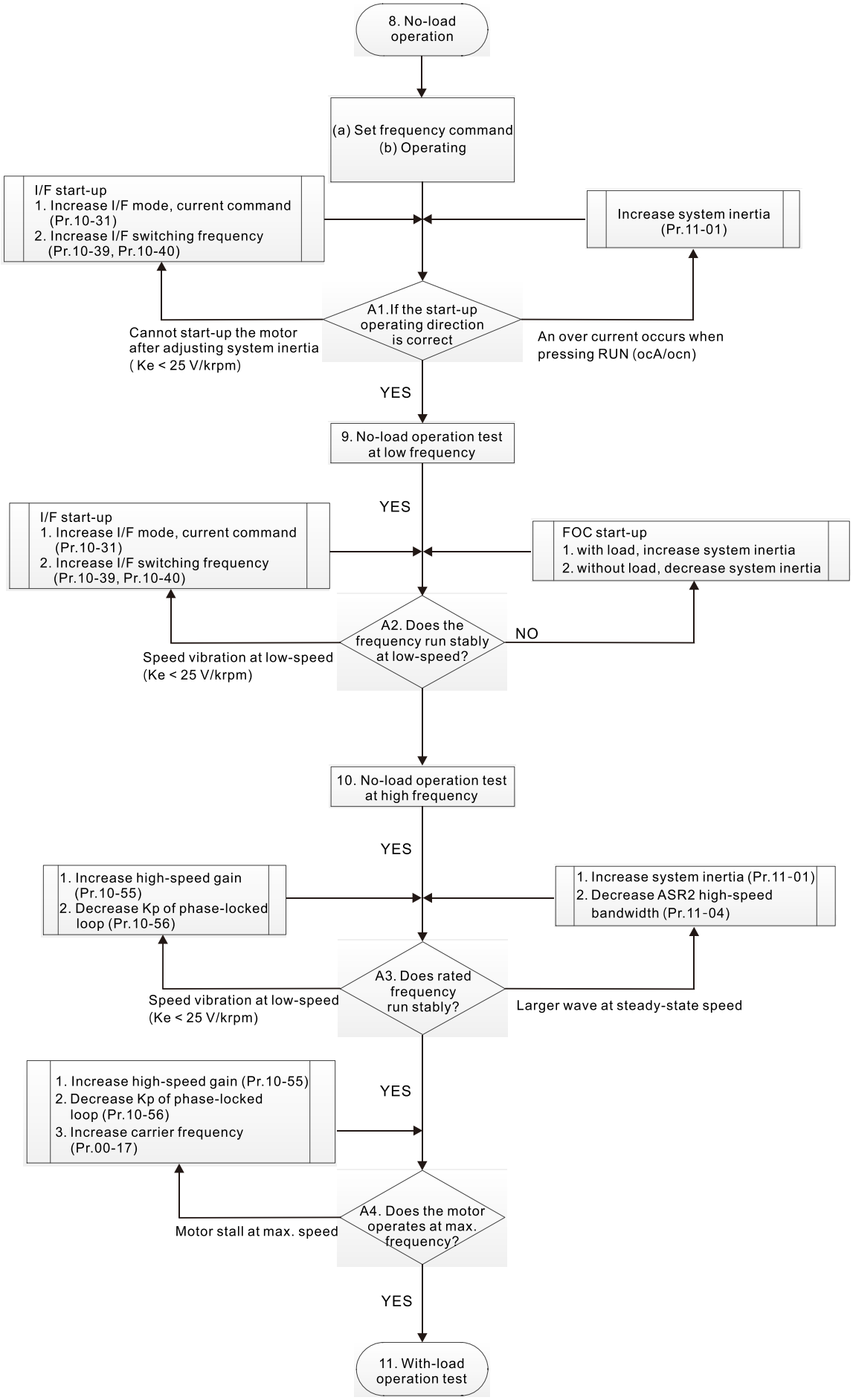

📖 No-load / light-load operation adjustment

8. Start the motor with no load
   (a) Set Pr.11-00 = 1 Auto-tuning for ASR
   (b) Start the motor without load, and operates the motor to 1/2 of rated rotor speed
   A1. Observe if the start-up operation direction is correct.
      a. If the start direction is wrong or starting rotation is not smooth (ocA), adjust Pr.11-01 (system inertia). When the Ke parameter (Pr.05-43) is < 25 V, increase Pr.10-31 (I/F mode, current command) or Pr.10-39, Pr.10-40 (switch the frequency from I/F mode to PM Sensorless mode).
      b. If the motor starts up with a reverse direction, but operates with a correct direction, adjust Pr.10-52 (injection magnitude) when using High frequency injection to detect the PM initial rotor position (Pr.10-53 = 2); increase Pr.10-42 (initial angle detection pulse value) to improve the accuracy of angle detection when using Pulse injection to detect the PM initial rotor position (Pr.10-53 = 3).
9. Acceleration test with no load / light load
   A3. Accelerate the motor to the rated frequency, and check if it operates stably.
      a. If the motor output frequency presents steady state speed wave, increase Pr.11-04 (ASR2 high-speed bandwidth) or Pr.11-01 (per-unit of system inertia).
      b. If the motor output frequency presents large fluctuations or diverges, increase Pr.10-55 (magnetic flux linkage estimate high-speed gain) or decrease Pr.10-56 (Kp of phase-locked loop).
   A4. Accelerate the motor to the maximum frequency, and check if it operates stably.
   If the motor stalls at the maximum operation speed, increase Pr.10-55 (magnetic flux linkage estimate high-speed gain) and Pr.00-17 (carrier frequency), or decrease Pr.10-56 (Kp of phase-locked loop).

Setting curve for speed regulator (ASR) and related parameters:

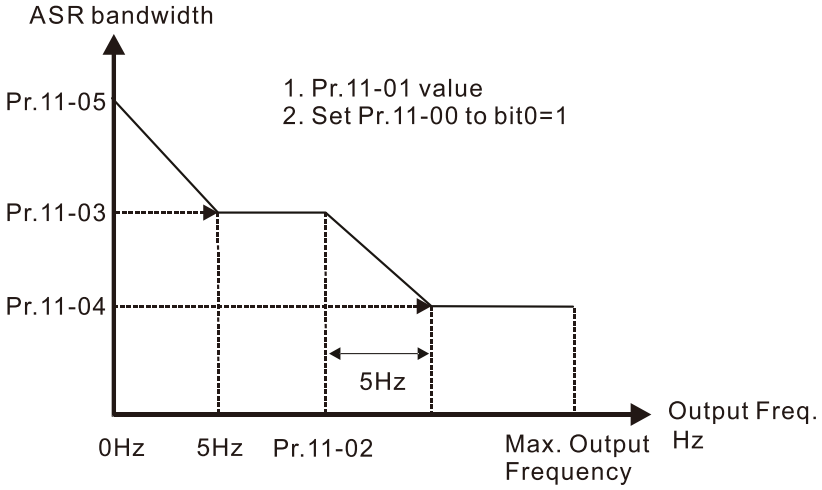

ASR adjustment- auto gain

Parameter	Description	Default
Pr.11-00	System control	0
Pr.11-01	Per-unit of system inertia	256
Pr.11-02	ASR1 / ASR2 switch frequency (set the switch frequency > Pr.10-39)	7 Hz
Pr.11-03	ASR1 low-speed bandwidth	10 Hz
Pr.11-04	ASR2 high-speed bandwidth	10 Hz
Pr.11-05	Zero-speed bandwidth	10 Hz

(3) PM Sensorless adjustment flowchart for operation starts with load

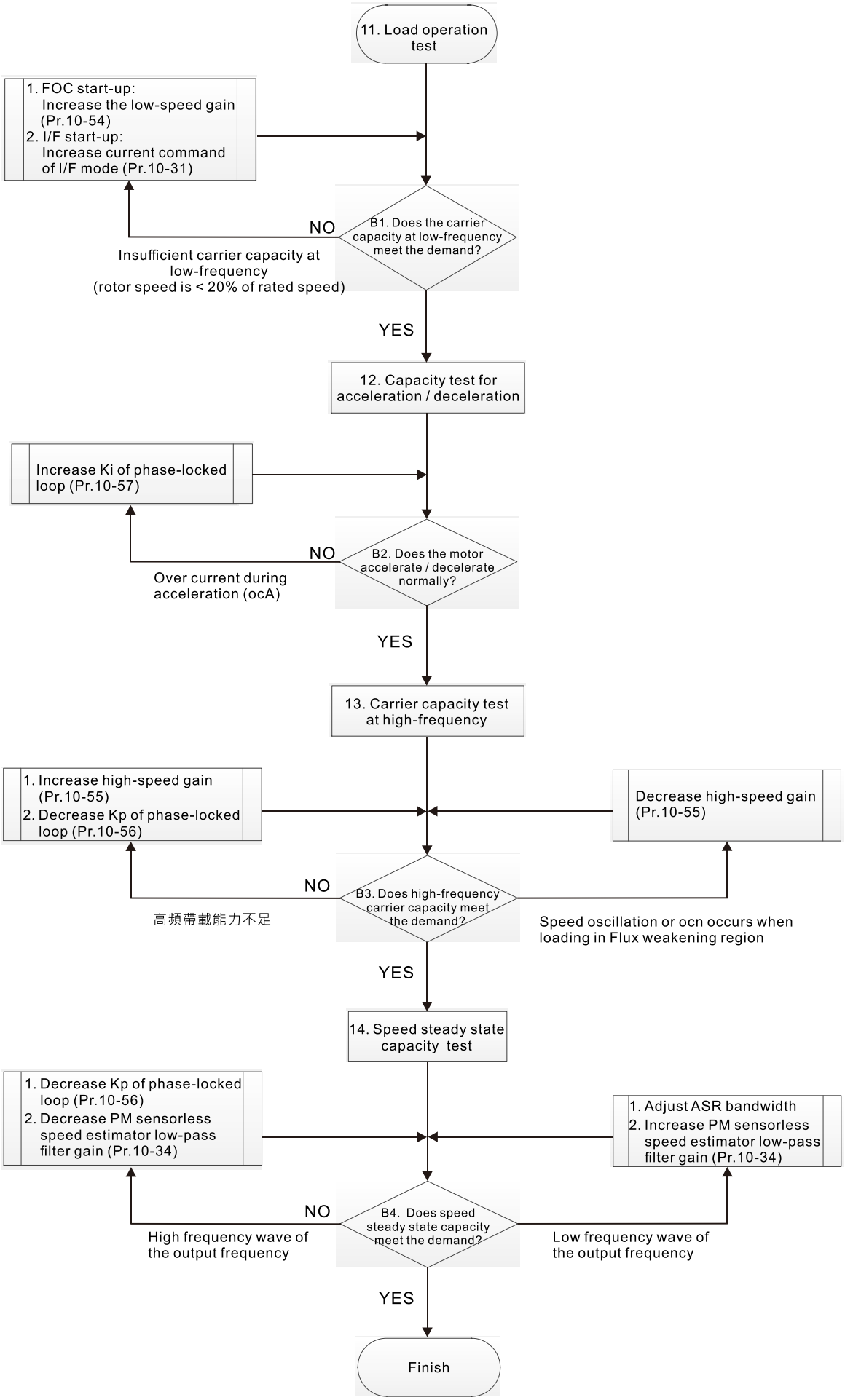

Load operation adjustment and steady state adjustment at constant speed

11. Load operation test
    - B1. Low-frequency carrier capacity test (the output frequency is < 20% of rated speed):
      - a. If the frequency switch from I/F mode to PM Sensorless is zero (Pr.10-39 = 0 Hz), increase Pr.10-54 (magnetic flux linkage estimate low-speed gain).
      - b. If the output frequency is less than Pr.10-39 (frequency to switch from I/F mode to PM Sensorless), increase Pr.10-31 (I/F mode, current command).
    - B2. Carrier capacity test during acceleration

      In heavy load operation, accelerate the motor to rated speed according to the acceleration time:
      - a. If the motor responds too slowly or an over current occurs during the acceleration, increase Pr.10-57 (Ki phase-locked loop).
12. Steady state test at constant speed, check if the motor operates stably at constant speed.
    - a. If the motor's output frequency presents periodic low-frequency wave, increase Pr.10-34 (PM sensorless speed estimator low-pass filter gain), or adjust the ASR parameters.
    - b. If the motor's output frequency presents extreme vibration, decrease Pr.10-34 (PM sensorless speed estimator low-pass filter gain) or Pr.10-56 (Kp phase-locked loop).

- PM Sensorless adjustment parameters

  Refer to Section 12-1 "Description of Parameter Settings" for detailed information.

Parameter	Description	Unit	Default	Settings
Pr.10-31	I/F mode, current command	%	40	150
Pr.10-34	PM sensorless speed estimator low-pass filter gain	NA	1.00	0.00–655.35
Pr.10-39	Frequency to switch from I/F mode to PM sensorless mode	Hz	20.0	0.0–599.0
Pr.10-40	Frequency to switch from PM sensorless mode to I/F mode	Hz	20.0	0.0–599.0
Pr.10-54	Magnetic flux linkage estimate low-speed gain (applied to 230V / 460V models)	%	100	10–1000
Pr.10-55	Magnetic flux linkage estimate high-speed gain (applied to 230V / 460V models)	%	100	10–1000
Pr.10-56	Kp of phase-locked loop (applied to 230V / 460V models)	%	100	10–1000
Pr.10-57	Ki of phase-locked loop (applied to 230V / 460V models)	%	100	10–1000
Initial Angle Estimating Parameters				
Pr.10-42	Initial angle detection pulse value	NA	0.5	0.0–3.0
Pr.10-51	Injection frequency (applicable when Pr.10-53 = 2)	Hz	500	0–1200
Pr.10-52	Injection magnitude (applicable when Pr.10-53 = 2)	V	15.0/3 0.0	0.0–200.0
Pr.10-53	PM initial rotor position detection method 0: Disable	NA	0	0–3

Parameter	Description	Unit	Default	Settings
	1: Force attracting the rotor to zero degrees 2: High frequency injection 3: Pulse injection			
Motor Performance Control Parameters				
Pr.11-00	System control	bit	0	0–8
Pr.11-02	ASR1 / ASR2 switch frequency	Hz	7.0	5.0–599.0
Pr.11-03	ASR1 low-speed bandwidth	Hz	10	1–[(Pr.00-17 Fc) ÷ 40] Hz
Pr.11-04	ASR2 high-speed bandwidth	Hz	10	1–[(Pr.00-17 Fc) ÷ 40] Hz
Pr.11-05	Zero-speed bandwidth	Hz	10	1–[(Pr.00-17 Fc) ÷ 40] Hz

12-2-5 Interior Permanent-Magnet Synchronous, Sensorless Field-Oriented Control Adjustment Procedure (IPM Sensorless, Pr.00-11 = 7)

(Applicable for CH2000 firmware version after V2.04)

I. Control diagram

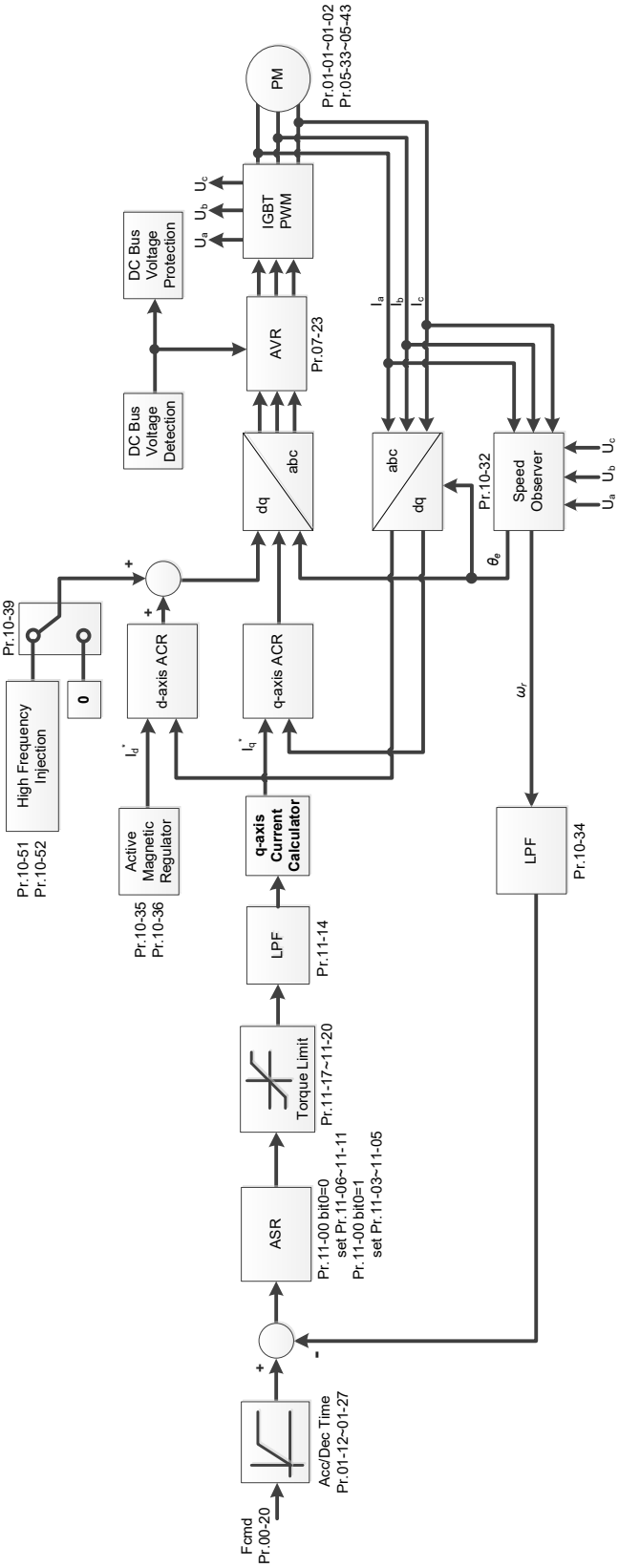

NOTE: IPM Sensorless FOC control is the control method dedicated for IPM, it uses the high salient pole characteristic (Lq > Ld) of IPM to detect the positions of NS magnetic poles. By doing this, it calculates the motor's rotor position at low-speed frequency.

II. IPM Sensorless adjustment procedure

NOTE: The number marked on the procedure corresponds to the number of following adjustment explanations)

(1) IPM Sensorless adjustment flowchart

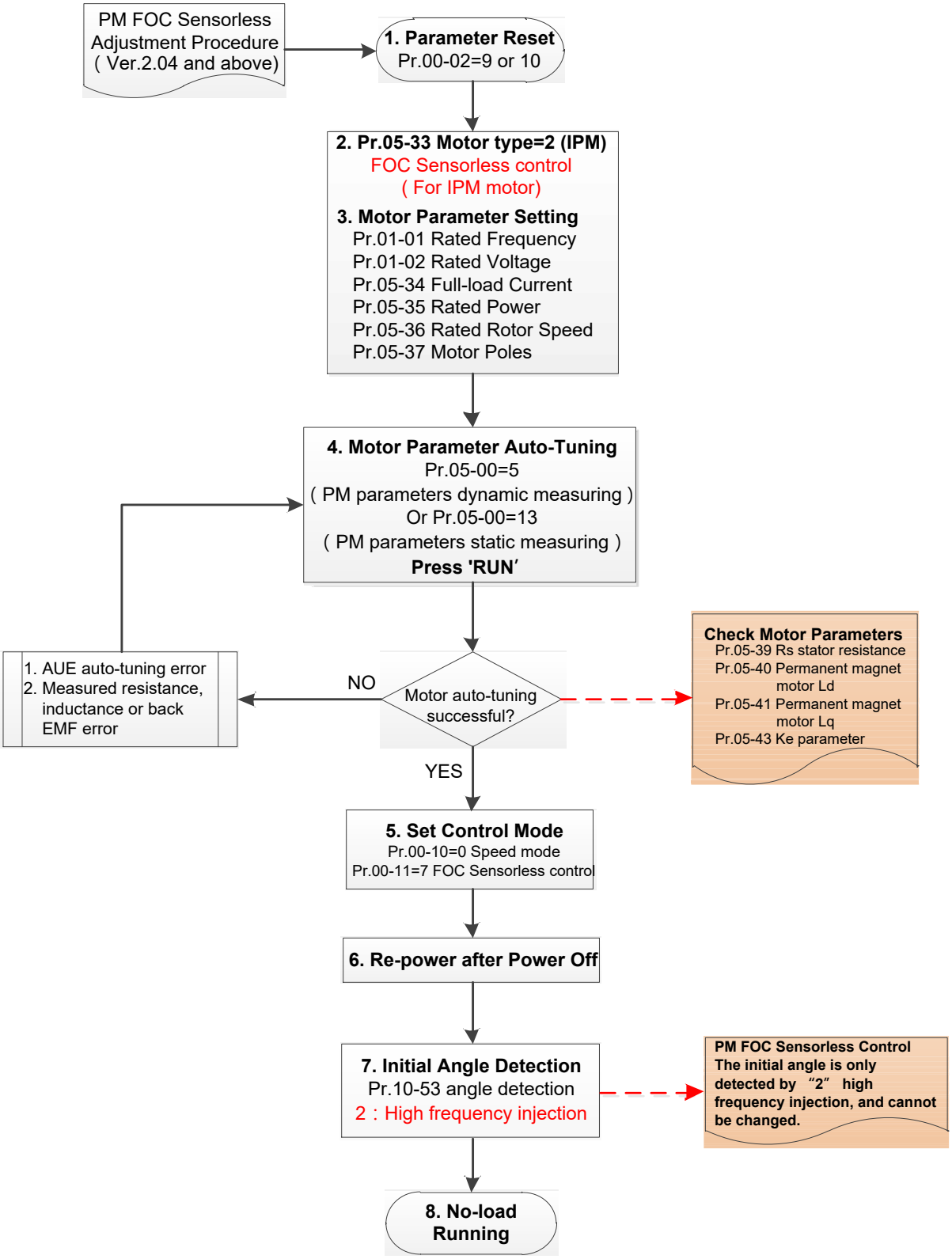

Basic motor parameters adjustment

1. Parameter reset:

   Reset Pr.00-02 = 9 (50 Hz) or 10 (60 Hz) to the default value.

2. Select IPM motor type:

   Pr.05-33 = 2 (IPM)

3. Motor nameplate parameter setting:

Parameter	Description
Pr.01-01	Rated frequency (Hz)
Pr.01-02	Rated voltage (V_{AC})
Pr.05-33	PM motor type (IPM or SPM)
Pr.05-34	Rated current (A)
Pr.05-35	Rated power (kW)
Pr.05-36	Rated rotor speed (RPM)
Pr.05-37	Number of poles for the motor (poles)

4. PM parameter auto-tuning:

   Set Pr.05-00 = 5 (rolling auto-tuning for PM, with no load) or 13 (static auto-tuning for PM) and press RUN key to finish motor auto-tuning, then you will get the following parameters:

Parameter	Description
Pr.05-39	Stator resistance for a permanent magnet motor (Ω)
Pr.05-40	Permanent magnet motor Ld (mH)
Pr.05-41	Permanent magnet motor Lq (mH)
Pr.05-43	Ke parameter of a permanent magnet motor ($V_{phase\ \cdot\ rms}$ / krpm) (When Pr.05-00 = 5, the Ke parameter is measured based on the actual motor rotation.) (When Pr.05-00 = 13, the Ke parameter is automatically calculated based on the motor power, current and rotor speed.)

   If an auto-tuning error (AUE) occurs, refer to Chapter 14 “Error Codes and Descriptions” for further treatment.

AUE Error (code)	Description
AUE (40)	Auto-tuning error
AUE1 (142)	Auto-tuning error 1 (No feedback current error)
AUE2 (143)	Auto-tuning error 2 (Motor phase loss error)
AUE3 (144)	Auto-tuning error 3 (No-load current I_0 measuring error)
AUE4 (148)	Auto-tuning error 4 (Leakage inductance Lsigma measuring error)

5. Set control mode

   Control mode for the drive: Pr.00-10 = 0: Speed mode

   Control mode for the motor: Pr.00-11 = 7: Interior PM FOC Sensorless

6. After auto-tuning, cycle the power.

7. Measure the initial magnetic pole angle of PM

   When Pr.00-11 = 7 PM FOC Sensoreless mode, the initial magnetic pole angle detection method is high frequency injection.

(2) IPM Sensorless adjustment flowchart for operation without load / with light load

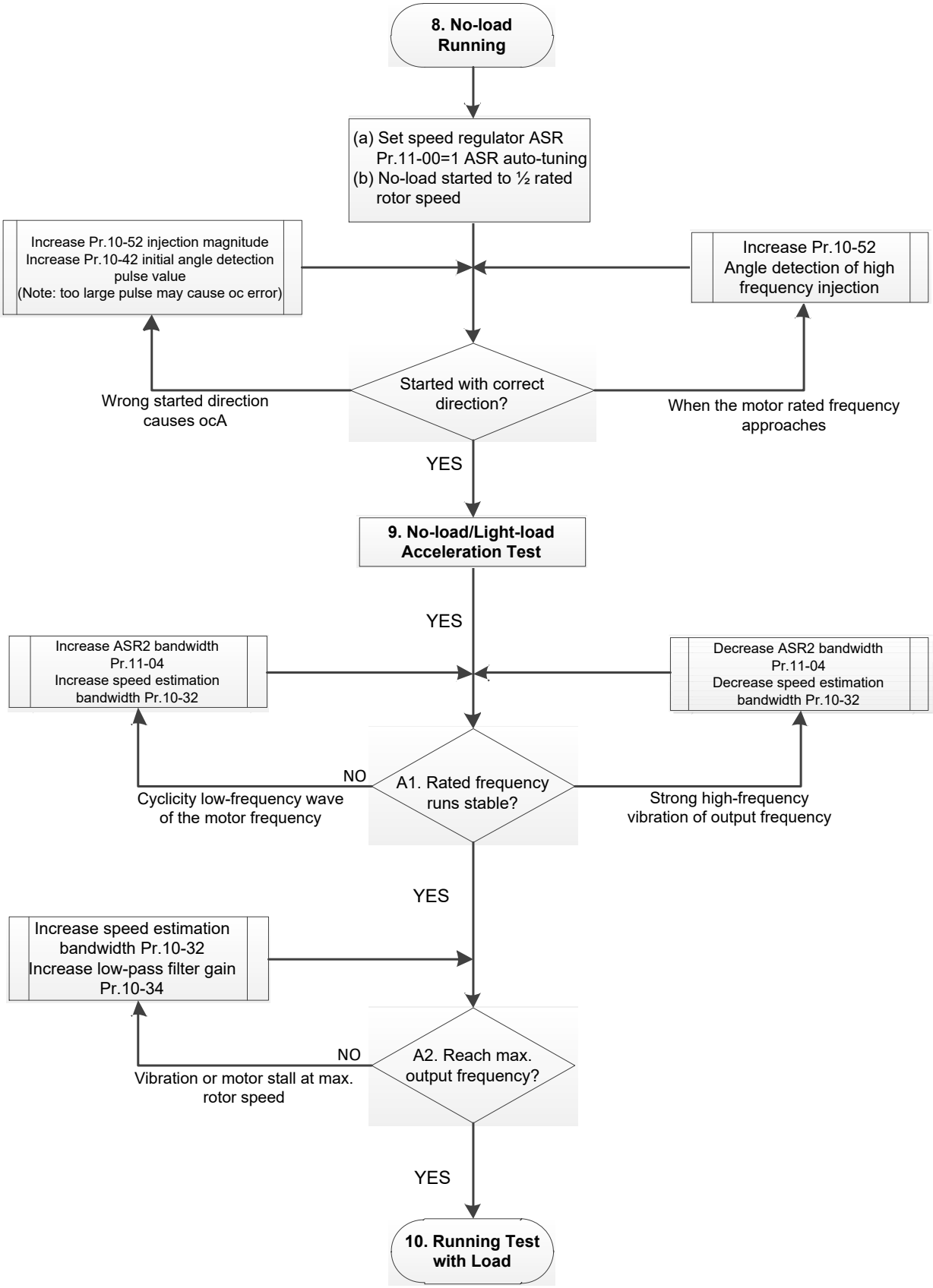

No-load / light-load operation adjustment

8. Start the motor with no-load
   (a) Set Pr.11-00 = 1 Auto-tuning for ASR and APR
   (b) Start the motor without load, and operates the motor to 1/2 of rated rotor speed
   a. If the start direction is wrong, starting rotation is not smooth (ocA) or the motor salient ratio (Lq / Ld) is low, increase Pr.10-52 (injection magnitude) and Pr.10-42 (initial angel detection pulse value) to improve the accuracy of the angle detection.
   b. If Pr. 10-51 (injection frequency) is close to the rated motor frequency (Pr.01-01), then increase Pr.10-51 to avoid the angle detection difference caused by motor rated frequency.
9. Acceleration test with no load / light load
   A1. Accelerate to rated frequency and observe if the motor operates stably.
      a. If the motor output rotor speed presents periodic low-frequency wave, increase Pr.11-04 (ASR2 high-speed bandwidth), or increase Pr.10-32 (PM FOC sensorless speed estimator bandwidth).
      b. If the output frequency reflects high-frequency vibration, decrease Pr.11-04 or decrease Pr.10-32.
   A2. Accelerate the motor to the maximum frequency, and observe if it operates stably. If the motor stalls when accelerating to the maximum rotor speed, increase Pr.10-32 (PM FOC sensorless speed estimator bandwidth) and Pr.10-34 (PM sensorless speed estimator low-pass filter gain).

Setting curve for speed regulator (ASR) and related parameters:

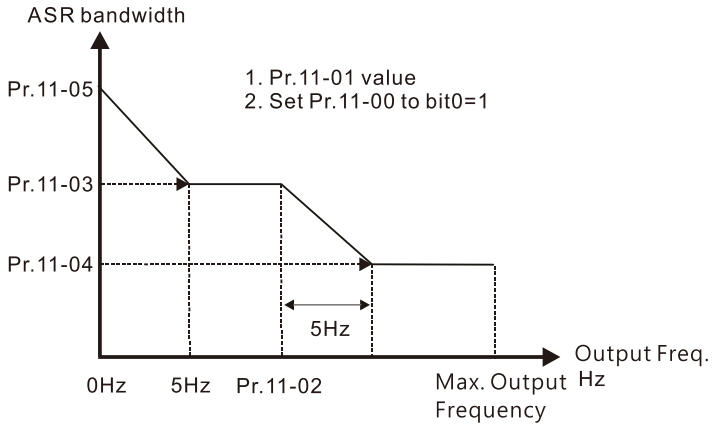

ASR adjustment- auto gain

Parameter	Description	Default
Pr.11-00	System control	0
Pr.11-01	Per unit of system inertia	256
Pr.11-02	ASR1 / ASR2 switch frequency (it is suggested to set the switch frequency higher than Pr.10-39)	7 Hz
Pr.11-03	ASR1 low-speed bandwidth	10 Hz
Pr.11-04	ASR2 high-speed bandwidth	10 Hz
Pr.11-05	Zero-speed bandwidth	10 Hz

(3) IPM Sensorless adjustment flowchart for operation starts with load

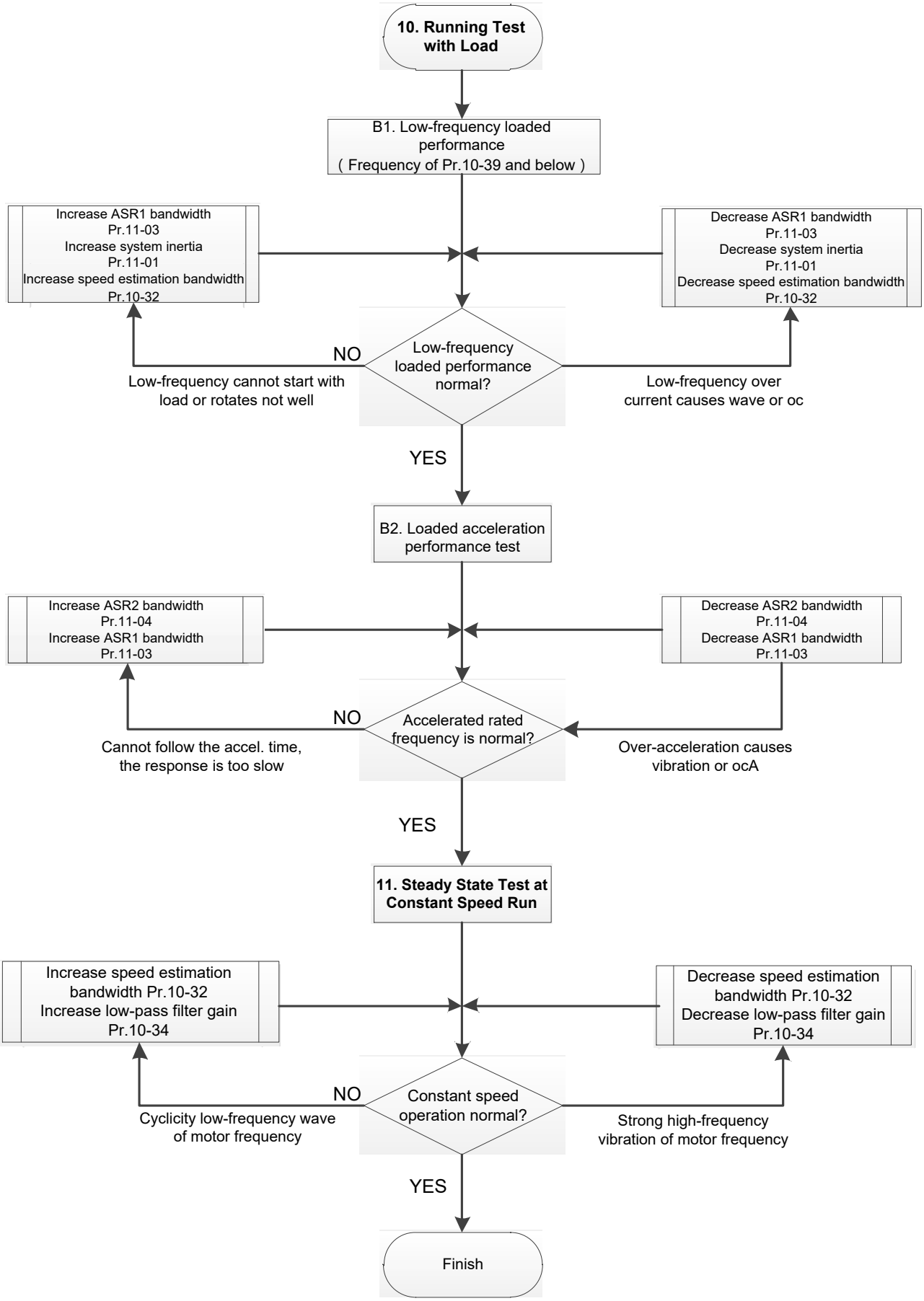

📖 Load operation adjustment

10. Load operating test

B1. Low-frequency loading performance when the switch frequency is below Pr.10-39:

a. When the low-frequency cannot start the motor with load, or the rotor speed is not smooth, increase Pr.11-03 (ASR1 low-speed bandwidth) or Pr.11-01 (per-unit of system inertia); if the above adjustment cannot meet the requirement, then increase Pr.10-32 (PM FOC sensorless speed estimator bandwidth).

b. When frequency outputs, low-frequency operating current is large or an oc error occurs, decrease Pr.11-03 and Pr.11-01; or decrease Pr.10-32.

B2. Acceleration performance test under heavy-load status, accelerate the motor to rated rotor speed according to the acceleration time:

a. If the motor cannot follow the acceleration time, and the response is too slow, increase Pr.11-04 (ASR2 high-speed bandwidth) and Pr.11-03 (ASR1 low-speed bandwidth).

b. If an excessive acceleration causes vibration or ocA error, decrease Pr.11-04 and Pr.11-03.

11. Stability test at constant speed operation: if the motor operates stably at constant speed

a. If the motor output rotor speed presents periodic low-frequency wave, increase Pr.10-34 (PM sensorless speed estimator low-pass filter gain), or increase Pr.10-32 (PM FOC sensorless speed estimator bandwidth).

b. If the output frequency reflects high-frequency vibration, decrease Pr.10-34 or decrease Pr.10-32.

- IPM Sensorless adjustment parameters

Refer to Section 12-1 Description of Parameter Settings for more details.

Parameter	Description	Unit	Default	Setting Range
Pr.10-32	PM FOC sensorless speed estimator bandwidth (high speed)	Hz	5.00	0.00–600.00
Pr.10-34	PM sensorless speed estimator bandwidth	N/A	1.00	0.00–655.35
Pr.10-35	AMR (Kp) gain	N/A	1.00	0.00–3.00
Pr.10-36	AMR (Ki) gain	N/A	0.20	0.00–3.00
Pr.10-39	Frequency point to switch from I/F mode to PM sensorless mode	Hz	20.00	0.00–599.00
Pr.10-40	Frequency point to switch from PM sensorless mode to V/F mode	Hz	20.00	0.00–599.00
Pr.10-42	Initial angle detection pulse value	N/A	1.0	0.0–3.0
Initial Angle Estimating Parameters				
Pr.10-51	Injection frequency (for IPM)	Hz	500	0–1200
Pr.10-52	Injection magnitude (for IPM)	V	15.0 / 30.0	0.0–200.0
Pr.10-53	PM initial rotor position detection method	N/A	0	0–3
Motor Performance Control Parameters				
Pr.11-00	System control	bit	0	0–8
Pr.11-02	ASR1 / ASR2 switch frequency	Hz	7	5.00–599.00
Pr.11-03	ASR1 low-speed bandwidth	Hz	10	1–[(Pr.00-17) ÷ 40] Hz
Pr.11-04	ASR2 high-speed bandwidth	Hz	10	1–[(Pr.00-17) ÷ 40] Hz
Pr.11-05	Zero-speed bandwidth	Hz	10	1–[(Pr.00-17) ÷ 40] Hz

12-2-6 Synchronous Reluctance Motor, Sensorless Field-Oriented Control Adjustment Procedure (SynRM Sensorless, Pr.00-11 = 8)

(Applicable for CH2000 firmware version after V2.04)

I. Control diagram

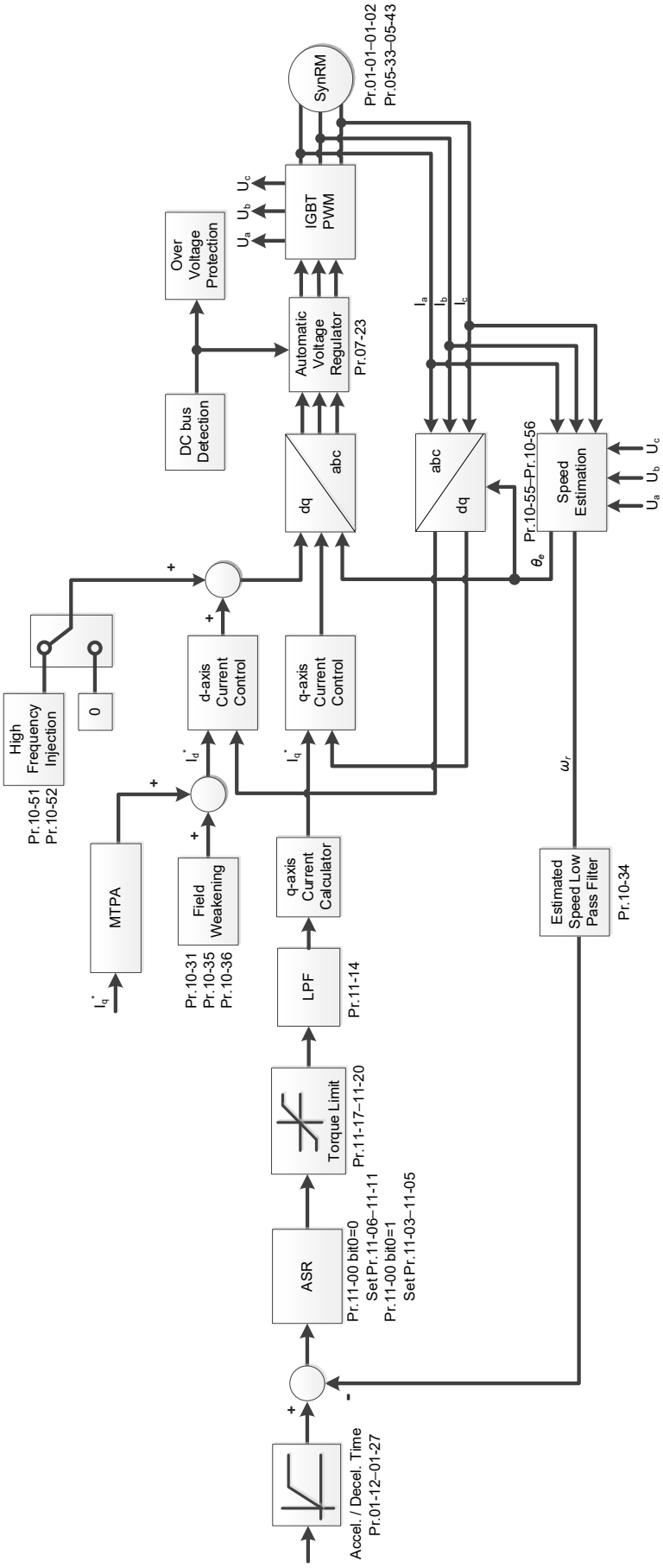

II. SynRM Sensorless adjustment procedure

NOTE: The number marked on the procedure corresponds to the number of following adjustment explanations.

(1) SynRM Sensorless motor parameters adjustment flowchart

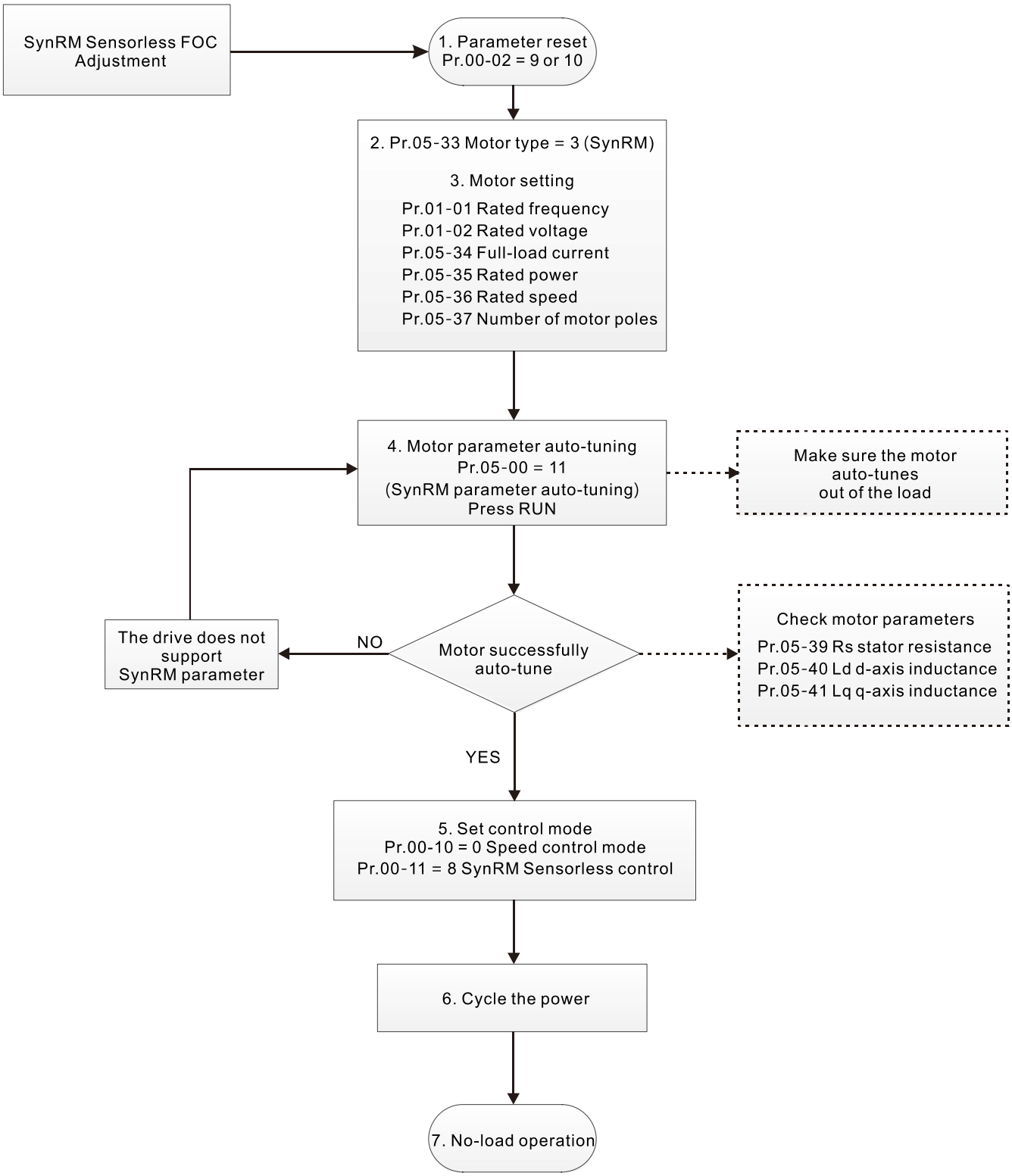

Motor parameters adjustment

1. Parameter reset:

   Reset Pr.00-02 = 9 (50 Hz) or 10 (60 Hz) to the default value

2. Select motor type:

   Pr.05-33 = 3 (SynRM)

3. Motor nameplate parameter setting:

Parameter	Description
Pr.01-01	Rated frequency (Hz)
Pr.01-02	Rated voltage (V_{AC})
Pr.05-34	Rated current (A)
Pr.05-35	Rated power (kW)
Pr.05-36	Rated rotor speed (rpm)
Pr.05-37	Number of motor poles (poles)

4. Motor parameter auto-tuning:

   Set Pr.05-00 = 5 (rolling auto-tuning for PM, with no load) or 13 (static auto-tuning for PM) and press RUN key to finish motor auto-tuning, then you will get the following parameters:

Parameter	Description
Pr.05-39	Stator resistance for a permanent magnet motor (Ω)
Pr.05-40	Permanent magnet motor Ld (mH)
Pr.05-41	Permanent magnet motor Lq (mH)

5. Set control mode:

   Set Pr.00-10 = 0 (Speed control mode)

   Set Pr.00-11 = 8 (SynRM Sensorless)

6. After auto-tuning, cycle the power.

(2) SynRM Sensorless for operation with no load

📖 No-load operation adjustment

7. Start the motor without load

A1. Start the motor without load, refer to the following adjustment before the operation frequency reaches 1/5 or motor's rated frequency:

a. If the motor starts in a wrong direction, the starting rotation is not smooth (ocA) or there is motor shaft lock, adjust Pr.10-31 (I/F mode, current command) and Pr.10-33 (PM FOC sensorless low-speed estimator bandwidth).

b. When there is an extreme vibration of the motor speed, adjust Pr.11-01 (per-unit of system inertia) and Pr.11-03 (ASR1 low-speed bandwidth) depending on whether the motor departs from the load.

Setting curve for speed regulator (ASR) and related parameters:

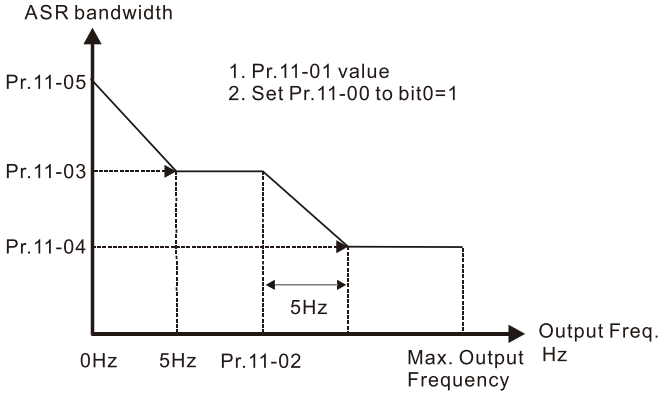

ASR adjustment- auto gain

Parameter	Description	Default
11-00	System control	201h
11-01	Per-unit of system inertia	256
11-02	ASR1 / ASR2 switch frequency (it's recommended that the switch frequency is higher than Pr.10-39)	10 Hz
11-03	ASR1 low-speed bandwidth	5 Hz
11-04	ASR2 high-speed bandwidth	5 Hz
11-05	Zero-speed bandwidth	5 Hz

A2. The operation frequency exceeds the switch frequency for Pr.10-39

a. If there is an extreme vibration of speed and current when switching frequency, or a fault occurs during the switching process, adjust Pr.10-56 (Kp of phase-locked loop).

b. Both of adjustments for Pr.10-55 (magnetic flux linkage estimate high-speed gain) and Pr.10-56 (Kp of phase-locked loop) affect the performance of the speed estimator. Adjust only Pr.10-56 in no-load operation.

A3. Observe whether the motor operates stably when accelerates to the maximum frequency

If the motor stalls at the maximum operation speed, decrease Pr.10-56 (Kp phase-locked loop)

(3) SynRM Sensorless adjustment for operation starts with load

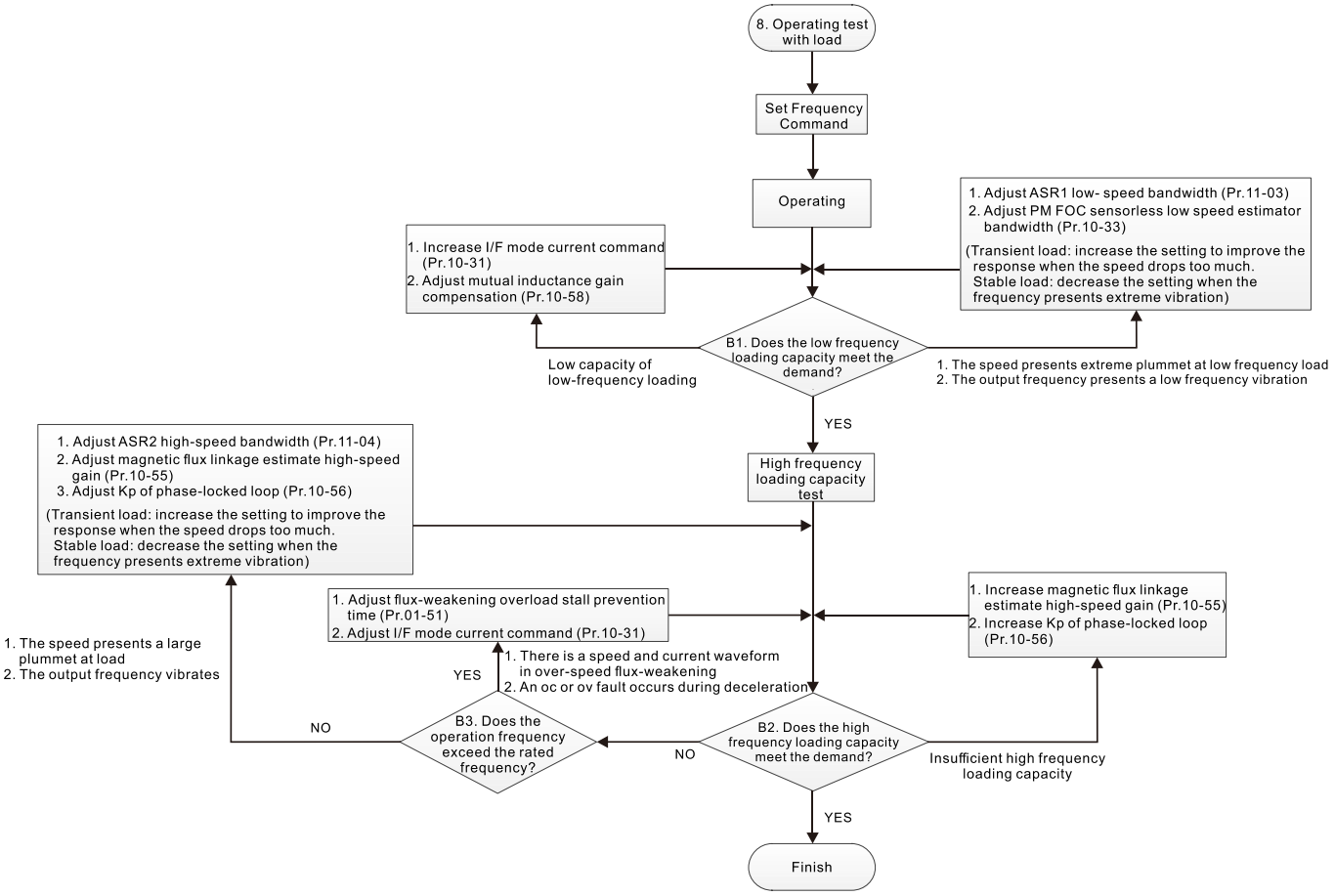

📖 Load operation adjustment

8. Operation test with load

B1. Low-frequency loading capacity test

a. If the low-frequency loading performance is low, increase Pr.10-31 (I/F mode, current command) and Pr.10-58 (mutual inductance compensation gain).

b. If the low-frequency loading speed presents large plummet, or the output frequency presents low-frequency vibration, adjust Pr.11-03 (ASR1 low-speed bandwidth) and Pr.10-33 (PM FOC sensorless speed estimator bandwidth). Increase the setting to improve the response when the speed drops too much at transient load. Decrease the setting if the frequency presents an extreme vibration at stable load.

B2. High frequency loading capacity test

a. If the high frequency loading performance is insufficient, increase Pr.10-55 (Magnetic flux linkage estimate high-speed gain) and Pr.10-56 (Kp of phase-locked loop).

b. If there is large plummet of loading speed, or the output frequency vibrates, adjust Pr.11-04 (ASR2 high-speed bandwidth), Pr.10-55 (magnetic flux linkage estimate high-speed gain) and Pr.10-56 (Kp of phase-locked loop). Increase the setting to improve the response when the speed drops too much at transient load. Decrease the setting if the frequency presents an extreme vibration at stable load.

B3. Operation frequency exceeds the rated frequency

a. When there is a waveform of speed and current in the flux-weakening zone, and an oc or ov fault occurs during the deceleration, adjust Pr.01-51 (flux-weakening overload stall prevention time) and Pr.10-31 (I/F mode current command).

- SynRM Sensorless adjustment parameters
- Refer to Section 12-1 Description of Parameter Settings for more details

Parameter	Description	Unit	Default	Settings
00-10	Control mode		0	0–2
00-11	Speed control mode		0	0–8
00-17	Carrier frequency	kHz	4	4–8
01-51	Flux-weakening overload stall prevention time	Sec.	1.00	0.00–600.00
05-00	Motor parameter auto-tuning		0	0–13
05-33	Induction motor (IM) or permanent magnet synchronous AC motor (PM) selection		3	0–3
05-34	Full-load current for a permanent magnet synchronous AC motor / reluctance motor	Amps	NA	NA
05-35	Rated power for a permanent magnet synchronous AC motor / reluctance motor	kW	NA	0–655.35
05-36	Rated speed for a permanent magnet synchronous AC motor / reluctance motor	rpm	NA	0–65535
05-37	Number of poles for a permanent magnet synchronous AC motor / reluctance motor		NA	0–65535
05-38	System inertia for a permanent magnet synchronous AC motor / reluctance motor	Kg-cm^2	NA	0.0–6553.5
05-39	Stator resistance for a permanent magnet synchronous AC motor / reluctance motor	ohm	0.000	0.000–65.535
05-40	Permanent magnet synchronous AC motor / reluctance motor Ld	mH	0.00	0.00–655.35

Parameter	Description	Unit	Default	Settings
05-41	Permanent magnet synchronous AC motor / reluctance motor Lq	mH	0.00	0.00–655.35
07-12	Speed tracking during start-up		0	0–4
10-08	Treatment for encoder / speed observer feedback fault		2	0–2
10-09	Detection time of encoder / speed observer feedback fault	Sec.	1.0	0.0–10.0
10-10	Encoder / speed observer stall level	%	115	0–120
10-11	Detection time of encoder / speed observer stall	sec	0.1	0.0–2.0
10-12	Encoder / speed observer stall action		2	0–2
10-13	Encoder / speed observer slip range	%	50	0–50
10-14	Detection time of encoder / speed observer slip	sec	0.5	0.0–10.0
10-15	Encoder / speed observer stall and slip error action		2	0–2
10-31	I/F mode, current command	%	15	0–150
10-33	PM FOC sensorless speed estimator bandwidth (low speed)		1.00	0.00–600.00
10-34	PM sensorless speed estimator low-pass filter gain		1.00	0.00–655.35
10-35	AMR (Kp) gain		0.40	0.00–3.00
10-36	AMR (Ki) gain		2.00	0.00–3.00
10-39	Frequency to switch from I/F mode to PM sensorless mode	Hz	10.00	0.0–599.00
10-51	Injection frequency	Hz	400	0–1200
10-52	Injection magnitude	%	30	0.0–200.0
10-55	Magnetic flux linkage estimate high-speed gain		100	10–1000
10-56	Kp of phase-locked loop	Hz	100	10–1000
10-58	Mutual inductance gain compensation		1.00	0.00–655.35
11-00	System control		513	0–65535
11-01	Per-unit of system inertia	pu	256	1–65535
11-02	ASR1 / ASR2 switch frequency	Hz	10.00	5.00–599.00
11-03	ASR1 low-speed bandwidth	Hz	5	1–30
11-04	ASR2 high-speed bandwidth	Hz	5	1–30
11-05	Zero-speed bandwidth	Hz	5	1–30
11-17	Forward motor torque limit Quadrant I	%	200	0–500
11-18	Forward regenerative torque limit Quadrant II	%	200	0–500
11-19	Reverse motor torque limit Quadrant III	%	200	0–500
11-20	Reverse regenerative torque limit Quadrant IV	%	200	0–500
11-35	Torque command filter time	Sec.	0.050	0.000–1.000

[This page intentionally left blank]

Chapter 13 Warning Codes

Summary of Warning Codes

ID No.	Warning Name	ID No.	Warning Name
0	No record	49	Keypad RTC time-out (PLrt)
1	Communication error 1 (CE1)	50	PLC opposite defect (PLod)
2	Communication error 2 (CE2)	51	PLC save memory error (PLSv)
3	Communication error 3 (CE3)	52	Data defect (PLdA)
4	Communication error 4 (CE4)	53	Function defect (PLFn)
5	Communication error 10 (CE10)	54	PLC buffer overflow (PLor)
7	Save error 1 (SE1)	55	Function defect (PLFF)
8	Save error 2 (SE2)	56	Checksum error (PLSn)
9	IGBT overheating warning (oH1)	57	No end command (PLEd)
10	Overheat key components (oH2)	58	PLC MCR error (PLCr)
11	PID feedback error (PID)	59	PLC download fail (PLdF)
12	ACI analog signal loss (AnL)	60	PLC scan time fail (PLSF)
13	Under current (uC)	61	CAN/M guarding error (PCGd)
15	PG feedback warning (PGFb)	62	CAN/M BUS off (PCbF)
17	Over speed warning (oSPd)	63	CAN/M node lack (PCnL)
18	Deviation Warning (dAvE)	64	CAN/M cycle time-out (PCCt)
20	Over-torque 1 (ot1)	65	CAN/M SDO over (PCSF)
21	Over-torque 2 (ot2)	66	CAN/M SDO time-out (PCSd)
22	Motor overheating (oH3) PTC / PT100	67	CAN/M address error (PCAd)
24	Over slip warning (oSL)	68	CAN/M time-out (PCTo)
25	Auto tuning (tUn)	70	ExCom ID fail (ECid)
28	Output phase loss (OPHL)	71	ExCom power loss (ECLv)
30	Copy model error 3 (SE3)	72	ExCom test mode (ECtt)
36	CANopen guarding time-out (CGdn)	73	ExCom BUS off (ECbF)
37	CANopen heartbeat error (CHbn)	74	ExCom no power (ECnP)
39	CANopen bus off error (CbFn)	75	ExCom factory defect (ECFF)
40	CANopen index error (CIdn)	76	ExCom inner error (ECiF)
41	CANopen station address error (CAdn)	77	ExCom IO Net break (ECio)
42	CANopen memory error (CFrn)	78	ExCom Parameter data error (ECPP)
43	CANopen SDO time-out (CSdn)	79	ExCom configuration data error (ECPi)
44	CANopen SDO receives register overflow (CSbn)	80	Ethernet link fail (ECEF)
46	CANopen format error (CPtn)	81	Communication time-out (ECto)
47	RTC adjust (PLrA)	82	Checksum error (ECCS)
48	InnerCOM error (PLiC)	83	Return defect (ECrF)
84	Modbus TCP over (Eco0)	123	Deceleration energy backup (dEb)

ID No.	Warning Name	ID No.	Warning Name
85	EtherNet/IP over (ECo1)	125	Index Pulse fail (INDX)
86	IP fail (ECiP)	126	Not home yet (nHoY)
87	Mail fail (EC3F)	127	Hardware positive limit (HPL)
88	ExCom busy (ECbY)	128	Hardware negative limit (HnL)
89	ExCom card break (ECCb)	129	Software positive limit (SPL)
90	Copy PLC: password error (CPLP)	130	Software negative limit (SnL)
91	Copy PLC: Read mode error (CPL0)	131	Position overflow (PoF)
92	Copy PLC: Write mode (CPL1)	132	Homing process fault (HPF)
93	Copy PLC: version error (CPLv)	133	Over position error limit (oPE)
94	Copy PLC: size error (CPLS)	134	Encoder low battery (EcLB)
95	Copy PLC: PLC function (CPLF)	135	Encoder multi-turn overflow (EcOF)
96	Copy PLC: time-out (CPLt)	136	D2D communicaition not built (DDUE)
101	InrCOM time-out (ictn)	137	D2D communication time-out (DDTO)
105	Estimated speed reverse (SpdR)		

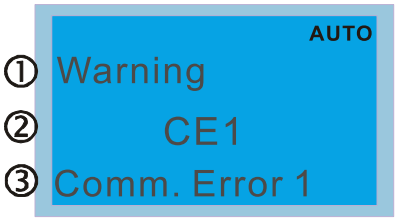

① Display error signal
② Abbreviate error code
③ Display error description

ID No.	Display on LCD Keypad	Warning Name	Description
1	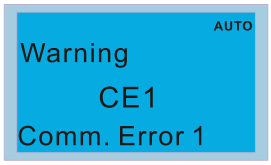	Communication error 1 (CE1)	RS-485 Modbus illegal function code
Action and Reset			
Action Condition	When the function code is not 03, 06, 10 and 63		
Action Time	Immediately act		
Warning Setting Parameter	N/A		
Reset Method	“Warning” occurs when Pr.09-02 = 0 and the motor drive keeps running. The drive resets automatically when receiving the correct function code.		
Reset Condition	Immediately reset		
Record	N/A		
Cause	Corrective Actions		
Incorrect communication command from upper unit	Check if the communication command is correct.		
Malfunction caused by interference	Verify the wiring and grounding of the communication circuit. It is recommended to separate the communication circuit from the main circuit, or wire in 90 degree for effective anti-interference performance.		
Different communication setting from upper unit	Check if the setting for Pr.09-04 is the same as the setting for the upper unit.		
Disconnection or bad connection of the cable	Check the cable and replace it if necessary.		

Display on LCD Keypad	Warning Name	Description
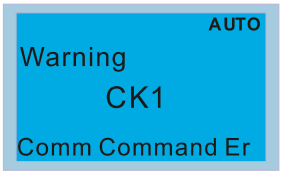	Communication command error 1 (CK1)	Keypad communication data, illegal function code (Keypad auto-detect this error and display it.)
Action and Reset		
Action Condition	When the function code is not 03, 06, 10 and 63	
Action Time	Immediately act	
Warning Setting Parameter	N/A	
Reset Method	Remove the keypad and then reconnect it to the motor drive.	
Reset Condition	Immediately reset	
Record	N/A	
Cause	Corrective Actions	
Incorrect communication command from keypad	Keypad and the motor drive don’t communicate properly. It is recommended to remove the keypad and then reconnect it to the motor drive.	
Malfunction caused by interference	Verify the wiring and grounding of the communication circuit. It is recommended to separate the communication circuit from the main circuit, or wire in 90 degree for effective anti-interference performance.	
Different communication setting from keypad	Check if the Baud rate = 19200 bps. Format = RTU8, N, 2.	
Disconnection or bad connection of the cable	Check the cable and replace it if necessary.	

ID No.	Display on LCD Keypad	Warning Name	Description
2	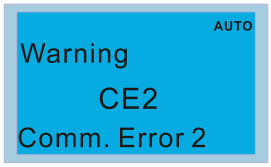	Communication error 2 (CE2)	RS-485 Modbus illegal data address
Action and Reset			
Action Condition	When the input data address is incorrect		
Action Time	Immediately act		
Warning Setting Parameter	N/A		
Reset Method	“Warning” occurs when Pr.09-02 = 0 and the motor drive keeps running. The drive resets automatically when receiving the correct data address.		
Reset Condition	Immediately reset		
Record	N/A		
Cause	Corrective Actions		
Incorrect communication command from upper unit	Check if the communication command is correct.		
Malfunction caused by interference	Verify the wiring and grounding of the communication circuit. It is recommended to separate the communication circuit from the main circuit, or wire in 90 degree for effective anti-interference performance.		
Different communication setting from upper unit	Check if the setting for Pr.09-04 is the same as the setting for the upper unit.		
Disconnection or bad connection of the cable	Check the cable and replace it if necessary.		

Display on LCD Keypad	Warning Name	Description
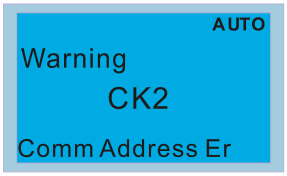	Communication address error (CK2)	Keypad communication data, illegal data address (Keypad auto-detect this error and display it.)
Action and Reset		
Action Condition	When the input data address is incorrect	
Action Time	Immediately act	
Warning Setting Parameter	N/A	
Reset Method	Remove the keypad and then reconnect it to the motor drive.	
Reset Condition	Immediately reset	
Record	N/A	
Cause	Corrective Actions	
Incorrect communication command from keypad	Keypad and the motor drive don’t communicate properly. It is recommended to remove the keypad and then reconnect it to the motor drive.	
Malfunction caused by interference	Verify the wiring and grounding of the communication circuit. It is recommended to separate the communication circuit from the main circuit, or wire in 90 degree for effective anti-interference performance.	
Different communication setting from keypad	Check if the Baud rate = 19200 bps. Format = RTU8, N, 2.	
Disconnection or bad connection of the cable	Check the cable and replace it if necessary.	

ID No.	Display on LCD Keypad	Warning Name	Description
3	AUTO Warning CE3 Comm. Error 3	Communication error 3 (CE3)	RS-485 Modbus illegal data value
Action and Reset			
Action Condition	When the length of communication data is too long		
Action Time	Immediately act		
Warning Setting Parameter	N/A		
Reset Method	“Warning” occurs when Pr.09-02 = 0 and the motor drive keeps running. The drive resets automatically when receiving the correct communication data value.		
Reset Condition	Immediately reset		
Record	N/A		
Cause	Corrective Actions		
Incorrect communication command from upper unit	Check if the communication command is correct.		
Malfunction caused by interference	Verify the wiring and grounding of the communication circuit. It is recommended to separate the communication circuit from the main circuit, or wire in 90 degree for effective anti-interference performance.		
Different communication setting from upper unit	Check if the setting for Pr.09-04 is the same as the setting for the upper unit.		
Disconnection or bad connection of the cable	Check the cable and replace it if necessary.		

Display on LCD Keypad	Warning Name	Description
AUTO Warning CK3 Comm Data Error	Communication data error (CK3)	Keypad communication data, illegal data value (Keypad auto-detect this error and display it.)
Action and Reset		
Action Condition	When the length of communication data is too long	
Action Time	Immediately act	
Warning Setting Parameter	N/A	
Reset Method	Remove the keypad and then reconnect it to the motor drive.	
Reset Condition	Immediately reset	
Record	N/A	
Cause	Corrective Actions	
Incorrect communication command from keypad	Keypad and the motor drive don’t communicate properly. It is recommended to remove the keypad and then reconnect it to the motor drive.	
Malfunction caused by interference	Verify the wiring and grounding of the communication circuit. It is recommended to separate the communication circuit from the main circuit, or wire in 90 degree for effective anti-interference performance.	
Different communication setting from keypad	Check if the Baud rate = 19200 bps. Format = RTU8, N, 2.	
Disconnection or bad connection of the cable	Check the cable and replace it if necessary.	

ID No.	Display on LCD Keypad	Warning Name	Description
4	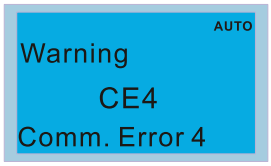	Communication error 4 (CE4)	RS-485 Modbus data is written to read-only address

Action and Reset	
Action Condition	When the data is written to read-only address
Action Time	Immediately act
Warning Setting Parameter	N/A
Reset Method	“Warning” occurs when Pr.09-02 = 0 and the motor drive keeps running. The drive resets automatically when receiving the correct written address of communication data.
Reset Condition	Immediately reset
Record	N/A
Cause	**Corrective Actions**
Incorrect communication command from upper unit	Check if the communication command is correct.
Malfunction caused by interference	Verify the wiring and grounding of the communication circuit. It is recommended to separate the communication circuit from the main circuit, or wire in 90 degree for effective anti-interference performance.
Different communication setting from upper unit	Check if the setting for Pr.09-04 is the same as the setting for the upper unit.
Disconnection or bad connection of the cable	Check the cable and replace it if is necessary.

Display on LCD Keypad	Warning Name	Description
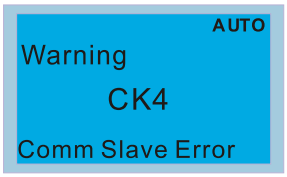	Communication slave error (CK4)	Keypad communication data is written to read-only address. (Keypad auto-detect this error and display it.)

Action and Reset	
Action Condition	When the data is written to read-only address
Action Time	Immediately act
Warning Setting Parameter	N/A
Reset Method	Remove the keypad and then reconnect it to the motor drive.
Reset Condition	Immediately reset
Record	N/A
Cause	**Corrective Actions**
Incorrect communication command from keypad	Keypad and the motor drive don’t communicate properly. It is recommended to remove the keypad and then reconnect it to the motor drive. If the problem persists after reconnecting the keypad, pay attention to the motor drive status. For example: Motor drive might reset to default setting during operation or while enabling PLC function.
Malfunction caused by interference	Verify the wiring and grounding of the communication circuit. It is recommended to separate the communication circuit from the main circuit, or wire in 90 degree for effective anti-interference performance.
Different communication setting from keypad	Check if the Baud rate = 19200 bps. Format = RTU8, N, 2.
Disconnection or bad connection of the cable	Check the cable and replace it if is necessary.

ID No.	Display on LCD Keypad	Warning Name	Description
5	AUTO Warning CE10 Comm. Error 10	Communication error 10 (CE10)	RS-485 Modbus transmission time-out
Action and Reset			
Action Condition	When the communication time exceeds the detection time of Pr.09-03 communication time-out		
Action Time	Setting for Pr.09-03		
Warning Setting Parameter	N/A		
Reset Method	“Warning” occurs when Pr.09-02 = 0 and the motor drive keeps running. The drive resets automatically when receiving the next communication packet.		
Reset Condition	Immediately reset		
Record	N/A		
Cause	Corrective Actions		
The upper unit does not transmit the communication command within Pr.09-03 setting time	Check if the upper unit transmits the communication command within the setting time for Pr.09-03.		
Malfunction caused by interference	Verify the wiring and grounding of the communication circuit. It is recommended to separate the communication circuit from the main circuit, or wire in 90 degree for effective anti-interference performance.		
Different communication setting from upper unit	Check if the setting for Pr.09-04 is the same as the setting for the upper unit.		
Disconnection or bad connection of the cable	Check the cable and replace it if necessary.		

Display on LCD Keypad	Warning Name	Description
AUTO Warning CK10 KpdComm Time Out	Keypad communication time out (CK10)	Keypad communication data, transmission time-out (Keypad auto-detect this error and display it.)
Action and Reset		
Action condition	When the communication time exceeds the detection time of Pr.09-03 communication time-out	
Action time	Setting for Pr.09-03	
Warning setting parameter	N/A	
Reset method	Remove the keypad and then reconnect it to the motor drive.	
Reset condition	Immediately reset	
Record	N/A	
Cause	Corrective Actions	
Incorrect communication command from keypad	Keypad and the motor drive don’t communicate properly. It is recommended to remove the keypad and then reconnect it to the motor drive.	
Malfunction caused by interference	Verify the wiring and grounding of the communication circuit. It is recommended to separate the communication circuit from the main circuit, or wire in 90 degree for effective anti-interference performance.	
Different communication setting from keypad	Check if the Baud rate = 19200 bps. Format = RTU8, N, 2.	
Disconnection or bad connection of the cable	Check the cable and replace it if necessary.	

ID No.	Display on LCD Keypad	Warning Name	Description
7	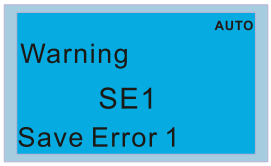	Save error 1 (SE1)	Keypad COPY error 1: Keypad copy time-out

Action and Reset	
Action Condition	“SE1” warning occurs when the keypad does not transmit the COPY command to the drive, and does not transmit any data to the drive again in 10 ms at the time you copy the parameters to the drive.
Action Time	10 ms
Warning Setting Parameter	N/A
Reset Method	Manual reset
Reset Condition	Immediately reset
Record	N/A
Cause	Corrective Actions
Communication connection error	SE1: The causes of error are mostly communication problems between the keypad and control board. Potential causes include communication signal interference and the unacceptable communication command to the Slave. Check if the error occurs randomly, or only occurs when copying certain parameters (the error displays on the upper right corner of the copy page). If you cannot clear the error, please contact Delta.
Keypad error	
Control board error	

ID No.	Display on LCD Keypad	Warning Name	Description
8	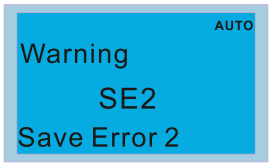	Save error 2 (SE2)	Keypad COPY error 2: parameter writing error
Action and Reset			
Action Condition		“SE2” warning occurs when writing the parameters incorrectly at the time you copy parameters to the drive. For example, you copy the new firmware version with added parameters to the drive with old firmware version.	
Action Time		N/A	
Warning Setting Parameter		N/A	
Reset Method		Manual reset	
Reset Condition		Immediately reset	
Record		N/A	
Cause		Corrective Actions	
Add new parameters to the new firmware version.		SE2: In this stage, the copied data has been transmitted to the Slave. The Slave compares and processes the copied data, and then saves the data to the Data ROM. During the process, the data error (should be attribution error) may occur, or the data cannot be saved to EEPROM. At this time, the warning occurs. It is suggested to check the status of Data ROM and remove the error causes first. If you cannot clear the error, please contact Delta.	
Malfunction caused by interference		Verify the wiring and grounding of the main circuit, control circuit and the encoder for effective anti-interference performance.	

ID No.	Display on LCD Keypad	Warning Name	Description
9	AUTO Warning oH1 Over heat 1 warn	IGBT overheating warning (oH1)	The AC motor drive detects over-heating of IGBT, and over the protection level of oH1 warning. (When Pr.06-15 is higher than the IGBT overheating level, the drive shows oH1 error without displaying oH1 warning.)

Action and Reset	
Action Condition	Pr.06-15
Action Time	“oH1” warning occurs when IGBT temperature is higher than Pr.06-15 setting value.
Warning Setting Parameter	N/A
Reset Method	Auto-reset
Reset Condition	The drive auto-resets when IGBT temperature is lower than oH1 warning level minus (–) 5°C
Record	N/A
Cause	**Corrective Actions**
Check if the ambient temperature or temperature inside the cabinet is too high, or if there is obstruction in the ventilation hole of the control cabinet.	1. Check the ambient temperature. 2. Regularly inspect the ventilation hole of the control cabinet. 3. Change the installed place if there are heating objects, such as braking resistors, in the surroundings. 4. Install / add cooling fan or air conditioner to lower the temperature inside the cabinet.
Check if there is any obstruction on the heat sink or if the fan is running	Remove the obstruction or replace the cooling fan.
Insufficient ventilation space	Increase ventilation space of the drive.
Check if the drive matches the corresponded loading	1. Decrease loading. 2. Decrease the carrier. 3. Replace with a drive with larger capacity.
The drive has run 100% or more of the rated output for a long time	Replace with a drive with larger capacity.

ID No.	Display on LCD Keypad	Warning Name	Description
10	AUTO Warning oH2 Over heat 2 warn	Heatsink overheating (oH2)	The drive has detected the heatsink are overheat

Action and Reset	
Action Condition	oH2 error level minus (–) 5°C
Action Time	The oH2 warning occurs when the temperature sensor of heatsink detects the temperature is higher than oH2 warning level
Warning Setting Parameter	N/A
Reset Method	Auto-reset
Reset Condition	The drive auto-resets when the temperature sensor of heatsink detects the temperature is lower than oH2 error level minus (–) 10°C
Record	N/A
Cause	**Corrective Actions**
Check if the ambient temperature or temperature inside the cabinet is too high, or if there is obstruction in the ventilation hole of the control cabinet.	1. Check the ambient temperature. 2. Regularly inspect the ventilation hole of the control cabinet. 3. Change the installed place if there are heating objects, such as braking resistors, in the surroundings. 4. Install / add cooling fan or air conditioner to lower the temperature inside the cabinet.
Check if there is any obstruction on the heat sink or if the fan is running	Remove the obstruction or replace the cooling fan.
Insufficient ventilation space	Increase ventilation space of the drive.
Check if the drive matches the corresponded loading	1. Decrease loading. 2. Decrease the carrier. 3. Replace with a drive with larger capacity.
The drive has run 100% or more of the rated output for a long time	Replace with a drive with larger capacity.
Unstable power	Install reactor(s).
The load changes frequently	Reduce the changes of the load.

oH1/ oH2 warning level

Model	oH1	oH2	oH warning oH1 warning = (Pr.06-15)
VFD007CH23A-21	110	95	oH1 Warning = oH1 – 5 oH2 Warning = oH2 – 5
VFD015CH23A-21		95	
VFD022CH23A-21		95	
VFD037CH23A-21		100	
VFD055CH23A-21		80	
VFD075CH23A-21		80	
VFD110CH23A-21		80	
VFD150CH23A-21		75	
VFD185CH23A-21		75	
VFD220CH23A-00/-21		65	
VFD300CH23A-00/-21		65	

Model	oH1	oH2	oH warning oH1 warning = (Pr.06-15)
VFD370CH23A-00/-21		65	
VFD450CH23A-00/-21		65	
VFD550CH23A-00/-21		65	
VFD750CH23A-00/-21		65	
VFD007CH43A/4EA-21	110	95	oH1 Warning = oH1 – 5 oH2 Warning = oH2 – 5
VFD015CH43A/4EA-21		95	
VFD022CH43A/4EA-21		100	
VFD037CH43A/4EA-21		105	
VFD055CH43A/4EA-21		100	
VFD075CH43A/4EA-21		80	
VFD110CH43A/4EA-21		80	
VFD150CH43A/4EA-21		80	
VFD185CH43A/4EA-21	110	85	oH1 Warning = oH1 – 5 oH2 Warning = oH2 – 5
VFD220CH43A/4EA-21		85	
VFD300CH43A/4EA-21		85	
VFD370CH43S-00/-21		65	
VFD370CH43L-00		70	
VFD450CH43A-00/-21		65	
VFD450CH43L-00		65	
VFD550CH43A-00/-21		65	
VFD550CH43L-00		65	
VFD750CH43A-00/-21		65	
VFD750CH43L-00		65	
VFD900CH43A-00/-21		65	
VFD1100CH43A-00/-21		65	
VFD1320CH43A-00/-21		65	
VFD1600CH43A-00/-21		70	
VFD1850CH43A-00/-21		70	
VFD2200CH43A-00/-21		70	
VFD2800CH43A-00 VFD2800CH43C-21		70	
VFD3150CH43A-00 VFD3150CH43C-21		70	
VFD3550CH43A-00 VFD3550CH43C-21		70	
VFD4500CH43A-00 VFD4500CH43C-21		70	

ID No.	Display on LCD Keypad	Warning Name	Description
11	AUTO Warning PID PID FBK Error	PID feedback error (PID)	PID feedback loss (warning for analog feedback signal; works only when PID enables)

Action and Reset		
Action Condition	When the analog input is lower than 4 mA (only detects analog input of 4–20 mA)	
Action Time	Pr.08-08	
Warning Setting Parameter	Pr.08-09 0: Warn and keep operation 1: Fault and ramp to stop 2: Fault and coast to stop 3: Warn and operate at last frequency	
Reset Method	Auto	“Warning” occurs when Pr.08-09 = 0 or 3. The “Warning” automatically clears when the feedback signal is larger than 4 mA.
	Manual	“Error” occurs when Pr.08-09 = 1 or 2. You must reset manually.
Reset Condition	Immediately reset	
Record	Records when Pr.08-09 = 1 or 2 (“Error”). Does not record when Pr.08-09 = 3 (“Warning”).	

Cause	Corrective Actions
Loose or broken PID feedback wiring	Tighten the terminals again. Replace with a new cable.
Feedback device malfunction	Replace with a new feedback device.
Hardware error	If the PID error still occurs after checking all the wiring, return to the factory for repair.

ID No.	Display on LCD Keypad	Warning Name	Description
12	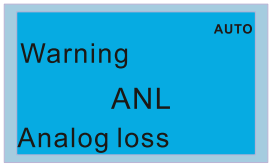	ACI analog signal loss (AnL)	Analog input current loss (including all analog 4–20mA signals)

Action and Reset		
Action Condition	When the analog input is lower than 4 mA (only detects analog input 4–20 mA)	
Action Time	Immediately act	
Warning Setting Parameter	Pr.03-19 0: Disable 1: Continue operation at the last frequency (warning, keypad displays ANL) 2: Decelerate to 0 Hz (warning, keypad displays ANL) 3: Stop immediately and display ACE	
Reset Method	Auto	“Warning” occurs when Pr.03-19 = 1 or 2. The “Warning automatically clears when the analog input signal is larger than 4 mA.
	Manual	“Error” occurs when Pr.03-19 = 3. You must reset manually.
Reset Condition	Immediately reset	
Record	Does not record when Pr.03-19 = 1 or 2 (“Warning”).	
Cause	Corrective Actions	
Loose or broken ACI wiring	Tighten the terminals again. Replace with a new cable.	
External device error	Replace new device.	
Hardware error	If the AnL error still occurs after checking all the wiring, return to the factory for repair.	

ID No.	Display on LCD Keypad	Warning Name	Description
13	AUTO Warning uC Under Current	Under current (uC)	Low current

Action and Reset		
Action Condition	Pr.06-71	
Action Time	Pr.06-72	
Warning Setting Parameter	Pr.06-73 0: No function 1: Fault and coast to stop 2: Fault and ramp to stop by second deceleration time 3: Warn and operation continue	
Reset Method	Auto	“Warning” occurs when Pr.06-73 = 3. The “Warning” automatically clears when the output current is > (Pr.06-71 + 0.1 A).
	Manual	“Error” occurs when Pr.06-73 = 1 and 2. You must reset manually.
Reset Condition	Immediately reset	
Record	Does not record when Pr.06-73 = 3 and uC displays “Warning”.	

Cause	Corrective Actions
Broken motor cable	Exclude the connection issue of the motor and its load.
Improper setting for the low current protection	Set the proper settings for Pr.06-71, Pr.06-72 and Pr.06-73.
Low load	Check the loading status. Make sure the loading matches the motor capacity.

ID No.	Display on LCD Keypad	Warning Name	Description
15	AUTO Warning PGFB PG FBK Warn	PG feedback warning (PGFb)	PG feedback error warning

Action and Reset	
Action Condition	Motor runs in a reverse direction to the direction of frequency command
Action Time	Pr.10-09
Warning Setting Parameter	Pr.10-08 = 0 0: Warn and operation continue 1: Fault and ramp to stop 2: Fault and coast to stop
Reset Method	Auto-reset
Reset Condition	“Warning” automatically clears when the drive stops
Record	N/A
Cause	Corrective Actions
Incorrect encoder parameter setting	Reset encoder parameter (Pr.10-02).
Check if the connection of encoder is loss	Wiring again.
Broken PG card or PG encoder	Replace with a new PG card or encoder.
Malfunction caused by interference	Verify wiring of the control circuit, and wiring / grounding of the main circuit to prevent interference.

ID No.	Display on LCD Keypad	Warning Name	Description
17	AUTO Warning oSPD Over Speed Warn	Over speed warning (oSPd)	Over speed warning

Action and Reset	
Action Condition	The encoder feedback speed > Pr.10-10
Action Time	Pr.10-11
Warning Setting Parameter	Pr.10-12 = 0 0: Warn and keep operation
Reset Method	“Warning” automatically clears when the drive stops
Reset Condition	“Warning” automatically clears when the drive stops
Record	N/A
Cause	Corrective Actions
Improper setting for Pr. 10-25 FOC bandwidth of speed observer	Decrease setting value for Pr.10-25.
Improper bandwidth setting for ASR speed controller	Increase the bandwidth setting for ASR speed controller.
Incorrect motor parameter setting	Reset motor parameter and run parameter tuning.
Malfunction caused by interference	Verify wiring of the control circuit, and wiring / grounding of the main circuit to prevent interference.

ID No.	Display on LCD Keypad	Warning Name	Description
18	AUTO Warning dAvE Deviation Warn	Deviation Warning (dAvE)	Over speed deviation warning

Action and Reset	
Action Condition	Pr.10-13
Action Time	Pr.10-14
Warning Setting Parameter	Pr.10-15 = 0 0: Warn and keep operation
Reset Method	“Warning” automatically clears when the drive stops
Reset Condition	After the drive stops
Record	N/A
Cause	Corrective Actions
Improper parameter setting for the slip error	Reset proper value for Pr.10-13 and Pr.10-14.
Improper setting for ASR parameter and acceleration/ deceleration	Reset ASR parameters. Set proper accel./ decel. time.
Accel./ Decel. time is too short	Reset proper accel./ decel. time.
Motor locked	Remove the causes of motor locked.
Mechanical brake is not released	Check the active timing of the system.
Incorrect parameter setting of torque limit (Pr.06-12, Pr.11-17–20)	Adjust to proper setting value.
Malfunction caused by interference	Verify wiring of the control circuit, and wiring / grounding of the main circuit to prevent interference.

ID No.	Display on LCD Keypad	Warning Name	Description
20	AUTO Warning ot1 Over Torque 1	Over-torque 1 (ot1)	Over-torque 1 warning
Action and Reset			
Action Condition	Pr.06-07		
Action Time	Pr.06-08		
Warning Setting Parameter	Pr.06-06 = 1 or 3 0: No function 1: Continue operation after over-torque detection during constant speed operation 2: Stop after over-torque detection during constant speed operation 3: Continue operation after over-torque detection during RUN 4: Stop after over-torque detection during RUN		
Reset Method	When input current < (Pr.06-07 – 5%), the ot1 warning automatically clears		
Reset Condition	When input current < (Pr.06-07 – 5%), the ot1 warning automatically clears		
Record	N/A		
Cause	Corrective Actions		
Incorrect parameter setting	Configure the settings for Pr.06-07 and Pr.06-08 again.		
Mechanical error (e.g. mechanical lock due to over-torque)	Remove the causes of malfunction.		
The load is too large	Decrease the loading. Replace with a motor with larger capacity.		
Accel./ Decel. time and working cycle is too short	Increase the setting values for Pr.01-12–01-19 (accel./ decel. time)		
V/F voltage is too high	Adjust the settings for Pr.01-01–01-08 (V/F curve), especially the setting value for the mid-point voltage (if the mid-point voltage is set too small, the load capacity decreases at low-speed).		
The motor capacity is too small	Replace with a motor with larger capacity.		
Over-load during low-speed operation	Decrease the loading during low-speed operation. Increase the motor capacity.		
The torque compensation is too large	Adjust the torque compensation value (Pr.07-26 torque compensation gain) until the output current decreases and the motor does not stall.		
Improper parameter settings for the speed tracking function (including restart after momentary power loss and restart after fault)	Correct the parameter settings for speed tracking. Start the speed tracking function. Adjust the maximum current for Pr.07-09 speed tracking.		

ID No.	Display on LCD Keypad	Warning Name	Description
21	AUTO Warning ot2 Over Torque 2	Over-torque (ot2)	Over-torque 2 warning
Action and Reset			
Action Condition	Pr.06-10		
Action Time	Pr.06-11		
Warning Setting Parameter	Pr.06-09 = 1 or 3 0: No function 1: Continue operation after over-torque detection during constant speed operation 2: Stop after over-torque detection during constant speed operation 3: Continue operation after over-torque detection during RUN 4: Stop after over-torque detection during RUN		
Reset Method	When output current < (Pr.06-10 – 5%), the ot2 warning automatically clears		
Reset Condition	When output current < (Pr.06-10 – 5%), the ot2 warning automatically clears		
Record	N/A		
Cause	Corrective Actions		
Incorrect parameter setting	Configure the settings for Pr.06-10 and Pr.06-11.		
Mechanical error (e.g. mechanical lock due to over-torque)	Remove the causes of malfunction.		
The load is too large	Decrease the loading. Replace with a motor with larger capacity.		
Accel./ Decel. time and working cycle is too short	Increase the setting values for Pr.01-12–01-19 (accel./ decel. time).		
V/F voltage is too high	Adjust the V/F curve (Motor 2, Pr.01-35–01-42), especially the setting value for the mid-point voltage (if the mid-point voltage is set too small, the load capacity decreases at low-speed).		
The motor capacity is too small	Replace with a motor with larger capacity.		
Over-load during low-speed operation	Decrease the loading during low-speed operation. Increase the motor capacity.		
The torque compensation is too large	Adjust the torque compensation value (Pr.07-26 torque compensation gain) until the output current decreases and the motor does not stall.		
Improper parameter settings for the speed tracking function (including restart after momentary power loss and restart after fault)	Correct the parameter settings for speed tracking. Start speed tracking function. Adjust the maximum current for Pr.07-09 speed tracking.		

ID No.	Display on LCD Keypad	Warning Name	Description
22_1	AUTO Warning oH3 Motor Over Heat	Motor over-heating (oH3) PTC	Motor over-heating warning. The AC motor drive detects the temperature inside the motor is too high

Action and Reset	
Action Condition	Pr.03-00 = 6 (PTC), PTC input level > Pr.06-30 (default = 50%)
Action Time	Immediately act
Warning Setting Parameter	Error treatment: Pr.06-29 0: Warn and keep operating 1: Fault and ramp to stop 2: Fault and coast to stop 3: No warning When Pr.06-29 = 0 and when the temperature is ≤ Pr.06-30 level, the oH3 warning automatically clears. When Pr.06-29 = (“Warning”), it automatically resets.
Reset Method	When Pr.06-29 = 0, oH3 displays “Warning”. When the temperature is ≤ Pr.06-30 level, the oH3 warning automatically clears.
Reset Condition	When the temperature is ≤ Pr.06-30 level, the oH3 warning automatically clears.
Record	N/A

Cause	Corrective Actions
Motor locked	Clear the motor lock status.
The load is too large	Decrease the loading. Replace with a motor with larger capacity.
Ambien temperature is too high	Change the installed place if there are heating devices in the surroundings. Install / add cooling fan or air conditioner to lower the ambient temperature.
Motor cooling system error	Check the cooling system to make it work normally.
Motor fan error	Replace the fan.
Operates at low-speed too long	Decrease low-speed operation time. Change to dedicated motor for the drive. Increase the motor capacity.
Accel./ Decel. time and working cycle is too short	Increase setting values for Pr.01-12–01-19 (accel./ decel. time).
V/F voltage is too high	Adjust settings for Pr.01-01–01-08 (V/F curve), especially the setting value for the mid-point voltage (if the mid-point voltage is set too small, the load capacity decreases at low-speed).
Check if the motor rated current matches the motor nameplate	Configure the correct rated current value of the motor again.
Check if the PTC is properly set and wired	Check the connection between PTC thermistor resistor and the heat protection.
Check if the setting for stall prevention is correct	Set the stall prevention to the proper value.
Unbalance three-phase impedance of the motor	Replace the motor.
Harmonics is too high	Use remedies to reduce harmonics.

ID No.	Display on LCD Keypad	Warning Name	Description
22_2	AUTO Warning oH3 Motor Over Heat	Motor overheating (oH3) PT100	Motor overheating warning. The AC motor drive detects the temperature inside the motor is too high.

Action and Reset	
Action Condition	Pr.03-00 = 11 (PT100), PT100 input level > Pr.06-57 (default = 7 V)
Action Time	Immediately act
Warning Setting Parameter	Error treatment: Pr.06-29 0: Warn and keep operating 1: Fault and ramp to stop 2: Fault and coast to stop 3: No warning When Pr.06-29 = 0 and when the temperature is < Pr.06-56 level, the oH3 warning automatically clears. If the temperature is between Pr.06-56 and Pr.06-57, the frequency outputs according to the operating frequency setting for Pr.06-58.
Reset Method	When Pr.06-29 = 0, oH3 displays “Warning”. When the temperature is < Pr.06-56 level, the oH3 warning automatically clears.
Reset Condition	When the temperature is < Pr.06-56 level, the oH3 warning automatically clears.
Record	N/A

Cause	Corrective Actions
Motor locked	Clear the motor lock status.
The load is too large	Decrease loading. Replace with a motor with larger capacity.
Ambien temperature is too high	Change the installed place if there are heating devices in the surroundings. Install/ add cooling fan or air conditioner to lower the ambient temperature.
Motor cooling system error	Check the cooling system to make it work normally.
Motor fan error	Replace the fan.
Operates at low-speed too long	Decrease low-speed operation time. Change to dedicated motor for the drive. Increase the motor capacity.
Accel./ Decel. time and working cycle is too short	Increase the setting values for Pr.01-12–01-19 (accel./ decel. time).
V/F voltage is too high	Adjust the settings for Pr.01-01–01-08 (V/F curve), especially the setting value for the mid-point voltage (if the mid-point voltage is set too small, the load capacity decreases at low-speed).
Check if the motor rated current matches the motor nameplate	Configure the correct rated current value of the motor again.
Check if the PT100 is properly set and wired	Check the connection between PT100 thermistor resistor and the heat protection.
Check if the setting for stall prevention is correct	Set the stall prevention to the proper value.
Unbalance three-phase impedance of the motor	Replace the motor.
Harmonics is too high	Use remedies to reduce harmonics.

ID No.	Display on LCD Keypad	Warning Name	Description
24	AUTO Warning oSL Over Slip Warn	Over slip warning (oSL)	Over slip warning. By using the maximum slip (Pr.10-29) as the base, when the drive outputs at constant speed, and the F > H or F < H exceeds Pr.07-29 level and Pr.07-30 setting time, 100% Pr.07-29 = Pr.10-29.

Action and Reset	
Action Condition	When the drive outputs at constant speed, and F > H or F < H exceeds the Pr.07-29 level
Action Time	Pr.07-30
Warning Setting Parameter	Pr.07-31 = 0 Warning 0: Warn and keep operation 1: Fault and ramp to stop 2: Fault and coast to stop 3: No warning
Reset Method	When Pr.07-31 = 0 and when the drive outputs at constant speed, and F > H or F < H no longer exceeds the Pr.07-29 level, the oSL warning automatically clears.
Reset Condition	N/A
Record	N/A
Cause	**Corrective Actions**
Check if the motor parameter is correct	Check the motor parameter.
The load is too large	Decrease the loading.
Check if the settings for Pr.07-29, Pr.07-30 and Pr.10-29 are properly set	Check the parameter settings for oSL protection.

ID No.	Display on LCD Keypad	Warning Name	Description
25	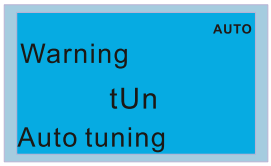	Auto tuning (tUn)	Parameter auto-tuning is processing. When running auto-tuning, the keypad displays “tUn”.

Action and Reset	
Action Condition	When running Pr.05-00 motor parameter auto-tuning, the keypad displays “tUn”.
Action Time	N/A
Warning Setting Parameter	N/A
Reset Method	When auto-tuning is finished and no error occurs, the warning automatically clears.
Reset Condition	When auto-tuning is finished and no error occurs.
Record	N/A
Cause	Corrective Actions
The motor parameter is running auto-tuning	When the auto-tuning is finished, the warning automatically clears.

ID No.	Display on LCD Keypad	Warning Name	Description
28	AUTO Warning OPHL Output PHL Warn	Output phase loss (OPHL)	Output phase loss
Action and Reset			
Action Condition		Pr.06-47	
Action Time		N/A	
Warning Setting Parameter		Pr.06-45 0: Warn and keep operating 1: Fault and ramp to stop 2: Fault and coast to stop 3: No warning	
Reset Method		If Pr.06-45 is set to 0, the OPHL warning automatically clears after the drive stops.	
Reset Condition		N/A	
Record		N/A	
Cause		Corrective Actions	
Unbalanced three-phase impedance of the motor		Replace the motor.	
Check if the wiring is incorrect		Check the cable. Replace the cable.	
Check if the motor is a single-phase motor		Choose a three-phase motor.	
Check if the current sensor is broken		Check if the control board cable is loose. If yes, reconnect the cable and run the drive to test. If the error still occurs, return to the factory for repair. Check if the three-phase current is balanced with a current clamp meter. If the current is balanced and the OPHL error still shows on the display, return to the factory for repair.	
If capacity of the drive is larger than the motor		Choose the matches capacity of the drive and motor.	

ID No.	Display on LCD Keypad	Warning Name	Description
30	AUTO Warning SE3 Copy Model Err 3	Copy model error 3 (SE3)	Keypad COPY error 3: copy model error
Action and Reset			
Action Condition		“SE3” warning occurs when different drive identity codes are found during copying parameters.	
Action Time		Immediately act when the error is detected	
Warning Setting Parameter		N/A	
Reset Method		Manual reset	
Reset Condition		N/A	
Record		N/A	
Cause		Corrective Actions	
Keypad copy between different power range drives		It is mainly to prevent parameter copies between different HP/models.	

ID No.	Display on LCD Keypad	Warning Name	Description
36		CANopen guarding time-out (CGdn)	CANopen guarding time-out 1

Action and Reset	
Action Condition	When CANopen Node Guarding detects that one of the slaves does not response, the CGdn error displays. The upper unit sets factor and time during configuration.
Action Time	The time that upper unit sets during configuration
Warning Setting Parameter	N/A
Reset Method	Manual reset
Reset Condition	The upper unit sends a reset package to clear this fault.
Record	N/A
Cause	Corrective Actions
The guarding time is too short, or less detection times	Increase the guarding time (Index 100C) and detection times.
Malfunction caused by interference	1. Verify the wiring and grounding of the communication circuit. It is recommended to separate the communication circuit from the main circuit, or wire in 90 degree for effective anti-interference performance. 2. Make sure the communication circuit is wired in series. 3. Use CANopen cable or add terminating resistance.

ID No.	Display on LCD Keypad	Warning Name	Description
37	AUTO Warning CHbn Heartbeat T-out	CANopen heartbeat error (CHbn)	CANopen heartbeat error
Action and Reset			
Action condition		When CANopen Heartbeat detects that one of the slaves does not response, the CHbn error shows. The upper unit sets the confirming time of producer and consumer during configuration.	
Action time		The upper unit sets the confirming time of producer and consumer during configuration.	
Warning setting parameter		N/A	
Reset method		Manual reset	
Reset condition		The upper unit sends a reset package to clear this fault	
Record		When Pr.00-21 ≠ 3, CHbn is a “Warning”, and the warning is not recorded	
Cause		Corrective Actions	
The heartbeat time is too short		Increase heartbeat time (Index 1016)	
Malfunction caused by interference		1. Verify the wiring and grounding of the communication circuit. It is recommended to separate the communication circuit from the main circuit, or wire in 90 degree for effective anti-interference performance. 2. Make sure the communication circuit is wired in series. 3. Use CANopen cable or add terminating resistance.	
Communication cable is broken or bad connected		Check or replace the communication cable.	

ID No.	Display on LCD Keypad	Warning Name	Description
39	AUTO Warning CbFn Can Bus Off	CANopen bus off error (CbFn)	CANopen BUS off error

Action and Reset		
Action Condition	Hardware	When CANopen card is not installed, CbFn fault will occur.
	Software	When the master received wrong communication package, CbFn fault will occur. Too much interference on BUS When the CAN_H and CAN_L communication cable is short, the master receives wrong package, and CbFn fault occurs.
Action Time	Immediately act when the fault is detected	
Warning Setting Parameter	N/A	
Reset Method	Manual Reset	
Reset Condition	Cycle the power	
Record	When Pr.00-21 ≠ 3, CbFn is a “Warning”, and the warning is not recorded	

Cause	Corrective Actions
Check if the CANopen card is installed	Make sure the CANopen card is installed.
Check if the CANopen speed is correct	Reset CANopen speed (Pr.09-37)
Malfunction caused by interference	1. Verify the wiring and grounding of the communication circuit. It is recommended to separate the communication circuit from the main circuit, or wire in 90 degree for effective anti-interference performance. 2. Make sure the communication circuit is wired in series. 3. Use CANopen cable or add terminating resistance.
Communication cable is broken or bad connected	Check or replace the communication cable.

ID No.	Display on LCD Keypad	Warning Name	Description
40	AUTO Warning CIdn CAN/S Idx exceed	CANopen index error (CIdn)	CANopen Index error
Action and Reset			
Action Condition		CANopen communication Index error	
Action Time		Immediately act when the fault is detected	
Warning Setting Parameter		N/A	
Reset Method		Manual Reset	
Reset Condition		Upper unit sends a reset package to clear this fault	
Record		When Pr.00-21 ≠ 3, CIdn is a “Warning”, and the warning is not recorded	
Cause		Corrective Actions	
Incorrect setting of CANopen index		Reset CANopen Index (Pr.00-02 = 7).	

ID No.	Display on LCD Keypad	Warning Name	Description
41	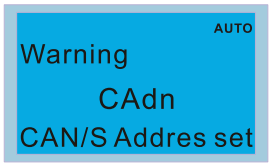	CANopen station address error (CAdn)	CANopen station address error (only supports 1–127)

Action and Reset	
Action Condition	CANopen station address error
Action Time	Immediately act when the fault is detected
Warning Setting Parameter	N/A
Reset Method	Manual Reset
Reset Condition	Pr.00-02 = 7
Record	When Pr.00-21 ≠ 3, CAdn is a “Warning”, and the warning is not recorded
Cause	Corrective Actions
Incorrect setting of CANopen station address	1. Disable CANopen (Pr.09-36 = 0). 2. Reset CANopen (Pr.00-02 = 7). 3. Reset CANopen station address (Pr.09-36).

ID No.	Display on LCD Keypad	Warning Name	Description
42	AUTO Warning CFrn CAN/S FRAM fail	CANopen memory error (CFrn)	CANopen memory error
Action and Reset			
Action Condition		When the user update firmware version of the control board, the FRAM internal data will not be changed, then CFrn fault will occur.	
Action Time		Immediately act when the fault is detected	
Warning Setting Parameter		N/A	
Reset Method		Manual Reset	
Reset Condition		Pr.00-02 = 7	
Record		When Pr.00-21 ≠ 3, CFrn is a “Warning”, and the warning is not recorded	
Cause		Corrective Actions	
CANopen internal memory error		1. Disable CANopen (Pr.09-36 = 0). 2. Reset CANopen (Pr.00-20 = 7). 3. Reset CANopen station address (Pr.09-36).	

ID No.	Display on LCD Keypad	Warning Name	Description
43	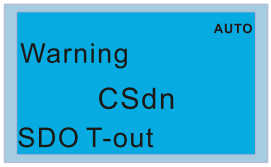	CANopen SDO time-out (CSdn)	SDO transmission time-out (only shows on master station)

Action and Reset	
Action Condition	When the CANopen master transmits SDO command, and the Slave response “time-out”, CSdn warning will occur.
Action Time	Immediately act when the fault is detected
Warning Setting Parameter	N/A
Reset Method	When the master resends a SDO command and receives the response, the warning automatically clears.
Reset Condition	N/A
Record	N/A
Cause	**Corrective Actions**
Slave is not connected	Connect slave and CANopen BUS.
The synchronize cycle is set too short	Increase the synchronization time (Index 1006).
Malfunction caused by interference	1. Verify the wiring and grounding of the communication circuit. It is recommended to separate the communication circuit from the main circuit, or wire in 90 degree for effective anti-interference performance. 2. Make sure the communication circuit is wired in series. 3. Use CANopen cable or add terminating resistance.
Disconnection or bad connection of the communication cable	Check the status of the cable, or replace the cable.

ID No.	Display on LCD Keypad	Warning Name	Description
44	AUTO Warning CSbn Buf Overflow	CANopen SDO receives register overflow (CSbn)	CANopen SDO receives register overflow
Action and Reset			
Action Condition		The upper unit sends too much SDO and causes buffer overflow	
Action Time		Immediately act when the fault is detected	
Warning Setting Parameter		N/A	
Reset Method		The upper unit sends a reset package to clear the warning.	
Reset Condition		N/A	
Record		N/A	
Cause		Corrective Actions	
Too much SDO from the upper unit		Check if the master sends too much SDO command. Make sure the master sends SDO command according to the command format.	

ID No.	Display on LCD Keypad	Warning Name	Description
46	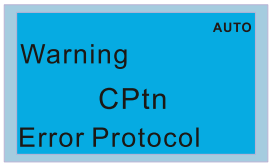	CANopen format error (CPtn)	CANopen protocol format error

Action and Reset	
Action Condition	The slave detects that data from the upper unit cannot be recognized, and then shows CPtn warning
Action Time	Immediately displays when the fault is detected
Warning Setting Parameter	N/A
Reset Method	The upper unit sends a reset packet to clear the warning
Reset Condition	N/A
Record	N/A
Cause	Corrective Actions
The upper unit sends incorrect communication packet	Make sure the master sends the packet based on CANopen DS301 standard command format.

ID No.	Display on LCD Keypad	Warning Name	Description
47		RTC adjust (PLrA)	PLC (RTC) is not adjusted

Action and Reset		
Action Condition	When using RTC function for PLC program, and PLC detects unreasonable RTC time, PLrA warning displays.	
Action Time	Immediately displays when the fault is detected	
Warning Setting Parameter	N/A	
Reset Method	Auto	Stops the PLC and runs again, the warning automatically clears
	Manual	Manual reset to clear this warning
Reset Condition	Cycle the power	
Record	N/A	

Cause	Corrective Actions
When using RTC function for PLC program, and the drive is power off over 7 days or KPC-CC01 does not connect to the drive for a long time, the RTC time is different with the internal calculated time when re-connect the keypad to the drive.	1. Stop the PLC program and restart it. 2. Adjust the RTC time and cycle the power.
KPC-CC01 does not adjust the RTC time	Adjust the RTC time and cycle the power.
PLC detects unreasonable RTC time	1. Stop the PLC program and restart it. 2. Cycle the power.
Replace with a new KPC-CC01	1. Stop the PLC program and restart it. 2. Cycle the power.

ID No.	Display on LCD Keypad	Warning Name	Description
48	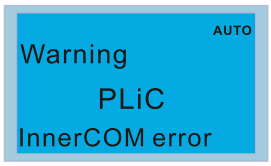	InnerCOM error (PLiC)	InnerCOM error

Action and Reset	
Action Condition	N/A
Action Time	N/A
Warning Setting Parameter	N/A
Reset Method	N/A
Reset Condition	When InnerCOM is back to normal condition, the warning automatically clears
Record	N/A
Cause	**Corrective Actions**
Communication cable is loose	Check the connection of the communication cable
Malfunction caused by interference	Verify the wiring and grounding of the communication circuit. It is recommended to separate the communication circuit from the main circuit, or wire in 90 degree for effective anti-interference performance. It recommended to install terminal resistor(s) on the first and the last unit of the communication circuit.

ID No.	Display on LCD Keypad	Warning Name	Description
49	AUTO Warning PIrt Keypad RTC T-out	Keypad RTC time-out (PLrt)	PLC (RTC) error
Action and Reset			
Action condition		N/A	
Action time		N/A	
Warning setting parameter		N/A	
Reset method		N/A	
Reset condition		Cycle the power	
Record		N/A	
Cause		Corrective Actions	
KPC-CC01 is not connected to the control board while using the RTC function		Do not remove the KPC-CC01 keypad while using RTC function.	

ID No.	Display on LCD Keypad	Warning Name	Description
50	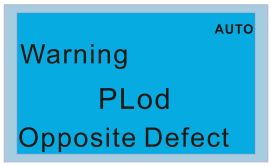	PLC opposite defect (PLod)	PLC download error warning

Action and Reset	
Action Condition	During PLC downloading, the program source code detects incorrect address (e.g. the address exceeds the range), then the PLod warning shows.
Action Time	Immediately displays when the fault is detected
Warning Setting Parameter	N/A
Reset Method	Check if the program is correct and re-download the program. If the fault does not exist, the warning automatically clears.
Reset Condition	N/A
Record	N/A
Cause	Corrective Actions
Incorrect component number is found when downloading the PLC program	Use the correct component number.

ID No.	Display on LCD Keypad	Warning Name	Description
51	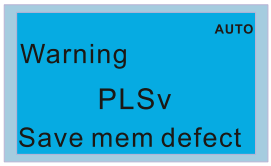	PLC save memory error (PLSv)	Data error during PLC operation

Action and Reset	
Action Condition	The program detects incorrect written address (e.g. the address has exceeds the range) during PLC operation, then the PLSv warning shows.
Action Time	Immediately displays when the fault is detected
Warning Setting Parameter	N/A
Reset Method	Check if the program is correct and re-download the program. If the fault does not exist, the warning automatically clears.
Reset Condition	N/A
Record	N/A
Cause	Corrective Actions
An incorrect written address is detected during PLC operation	Make sure the write-in address is correct and re-download the program.

ID No.	Display on LCD Keypad	Warning Name	Description
52		Data defect (PLdA)	Data error during PLC operation

Action and Reset	
Action Condition	The program detects incorrect write-in address when translating the program source code, then PLdA warning acts.
Action Time	Immediately displays when the fault is detected
Warning Setting Parameter	N/A
Reset Method	Check if the program is correct and re-download the program. If the fault does not exist, the warning automatically clears.
Reset Condition	N/A
Record	N/A
Cause	Corrective Actions
During PLC operation, the external Modbus has written/read incorrect data to internal PLC program	Check if the upper unit transmits the correct command

ID No.	Display on LCD Keypad	Warning Name	Description
53		Function defect (PLFn)	PLC download function code error

Action and Reset	
Action Condition	The program detects incorrect command (unsupported command) during PLC downloading, then PLFn warning acts.
Action Time	Immediately displays when the fault is detected
Warning Setting Parameter	N/A
Reset Method	Check if the program is correct and re-download the program. If the fault does not exist, the warning automatically clears.
Reset Condition	N/A
Record	N/A
Cause	**Corrective Actions**
Unsupported command has used while downloading the program	Check if the firmware of the drive is the old version. If yes, please contact Delta.

ID No.	Display on LCD Keypad	Warning Name	Description
54	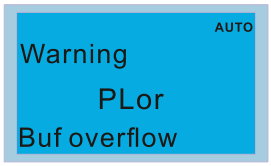	PLC buffer overflow (PLor)	PLC register overflow
Action and Reset			
Action Condition		When PLC runs the last command and the command exceeds the maximum capacity of the program, the PLor warning shows.	
Action Time		Immediately displays when the fault is detected	
Warning Setting Parameter		N/A	
Reset Method		Check if the program is correct and re-download the program. If the fault does not exist, the warning automatically clears.	
Reset Condition		N/A	
Record		N/A	
Cause		Corrective Actions	
The program detects source code error during PLC operation		1. Disable PLC 2. Delete PLC program (Pr.00-02 = 6) 3. Enable PLC 4. Re-download PLC program	

ID No.	Display on LCD Keypad	Warning Name	Description
55	AUTO Warning PLFF Function defect	Function defect (PLFF)	Function code error during PLC operation

Action and Reset	
Action Condition	The program detects incorrect command (unsupported command) during PLC operation, then PLFF warning shows.
Action Time	Immediately displays when the fault is detected
Warning Setting Parameter	NA
Reset Method	Check if the program is correct and re-download the program. If the fault does not exist, the warning automatically clears.
Reset Condition	N/A
Record	N/A
Cause	Corrective Actions
The PLC runs an incorrect command during operation	When starting the PLC function and there is no program in the PLC, the PLFF warning shows. This is a normal warning, please download the program.

ID No.	Display on LCD Keypad	Warning Name	Description
56	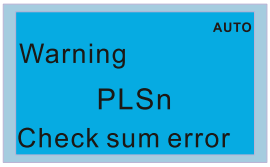	Checksum error (PLSn)	PLC checksum error

Action and Reset	
Action Condition	PLC checksum error is detected after power on, then PLSn warning shows
Action Time	Immediately displays when the fault is detected
Warning Setting Parameter	NA
Reset Method	Check if the program is correct and re-download the program. If the fault does not exist, the warning automatically clears.
Reset Condition	N/A
Record	N/A
Cause	**Corrective Actions**
The program detects checksum error during PLC operation	1. Disable PLC 2. Remove PLC program (Pr.00-02 = 6) 3. Enable PLC 4. Re-download PLC program

ID No.	Display on LCD Keypad	Warning Name	Description
57	AUTO Warning PLEd No end command	No end command (PLEd)	PLC end command is missing

Action and Reset	
Action Condition	The “End” command is missing until the last command is executed, the PLEd warning shows
Action Time	Immediately displays when the fault is detected
Warning Setting Parameter	NA
Reset Method	Check if the program is correct and re-download the program. If the fault does not exist, the warning automatically clears.
Reset Condition	N/A
Record	N/A
Cause	**Corrective Actions**
There is no “END” command during PLC operation	1. Disable PLC 2. Remove PLC program (Pr.00-02 = 6) 3. Enable PLC 4. Re-download PLC program

ID No.	Display on LCD Keypad	Warning Name	Description
58	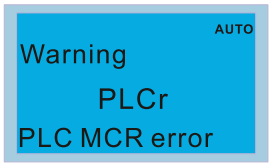	PLC MCR error (PLCr)	PLC MCR command error

Action and Reset	
Action Condition	The MC command is detected during PLC operation, but there is no corresponded MCR command, then the PLCr warning shows.
Action Time	Immediately displays when the fault is detected
Warning Setting Parameter	NA
Reset Method	Check if the program is correct and re-download the program. If the fault does not exist, the warning automatically clears.
Reset Condition	N/A
Record	N/A
Cause	Corrective Actions
The MC command is continuously used for more than 9 times	The MC command cannot be used continuously for 9 times. Check and reset the program, then re-download the program.

ID No.	Display on LCD Keypad	Warning Name	Description
59	AUTO Warning PLdF Download fail	PLC download fail (PLdF)	PLC download fail

Action and Reset	
Action Condition	PLC download fail due to momentary power loss during the downloading, when power is ON again, PLdF warning shows.
Action Time	Immediately displays when the fault is detected
Warning Setting Parameter	NA
Reset Method	Check if the program is correct and re-download the program. If the fault does not exist, the warning automatically clears.
Reset Condition	N/A
Record	N/A
Cause	Corrective Actions
PLC download is forced to stop, so the program write-in is uncompleted	Check if there is any error in the program and re-download the PLC program.

ID No.	Display on LCD Keypad	Warning Name	Description
60	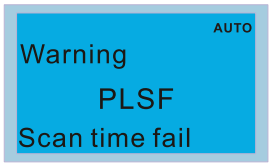	PLC scan time fail (PLSF)	PLC scan time exceeds the maximum allowable time

Action and Reset	
Action Condition	When the PLC scan time exceeds the maximum allowable time (400 ms), PLSF warning shows.
Action Time	Immediately displays when the fault is detected
Warning Setting Parameter	NA
Reset Method	Check if the program is correct and re-download the program. If the fault does not exist, the warning automatically clears.
Reset Condition	N/A
Record	N/A
Cause	**Corrective Actions**
The PLC scan time exceeds the maximum allowable time (400 ms)	Check if the source code is correct and re-download the program.

ID No.	Display on LCD Keypad	Warning Name	Description
61	AUTO Warning PCGd CAN/M Guard err	CAN/M guarding error (PCGd)	CANopen Master guarding error

Action and Reset	
Action Condition	When CANopen Master Node Guarding detects that one of the Slaves does not response, the PCGd warning will display
Action Time	Immediately displays when the fault is detected
Warning Setting Parameter	NA
Reset Method	Check if the program is correct and re-download the program. If the fault does not exist, the warning automatically clears.
Reset Condition	N/A
Record	N/A
Cause	**Corrective Actions**
Slave is not connected or CANopen BUS cable is not connected	Connect the Slave and CANopen BUS.
Malfunction caused by interference	1. Verify wiring / grounding of the communication circuit. It is recommended to separate the communication circuit from the main circuit, or wire in 90 degree for effective anti-interference performance. 2. Make sure the communication circuit is wired in series. 3. Use CANopen cable or add terminating resistance.
Communication cable is broken or bad connected	Check or replace the communication cable.

ID No.	Display on LCD Keypad	Warning Name	Description
62	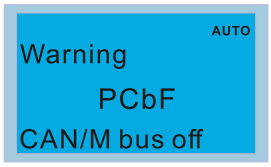	CAN/M BUS off (PCbF)	CANopen Master BUS off
Action and Reset			
Action Condition		When the CANopen master detects error packets more than 255 during the BUS off detection, or when the CANopen card is not installed, the PCbF warning displays. If the BUS cable is not connected, the drive will not receive issues packet, and the PCbF warning will not display.	
Action Time		Immediately displays when the fault is detected	
Warning Setting Parameter		NA	
Reset Method		Cycle the power	
Reset Condition		N/A	
Record		N/A	
Cause		Corrective Actions	
Malfunction caused by interference		1. Verify wiring/grounding of the communication circuit. It is recommended to separate the communication circuit from the main circuit, or wire in 90 degree for effective anti-interference performance. 2. Make sure the communication circuit is wired in series. 3. Use CANopen cable or add terminating resistance.	
Communication cable is broken or bad connected		Check or replace the communication cable.	

ID No.	Display on LCD Keypad	Warning Name	Description
63	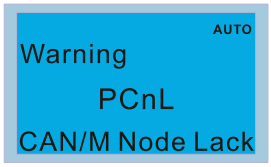	CAN/M node lack (PCnL)	CANopen Master node error

Action and Reset	
Action Condition	When the CANopen master configures different setting nodes from the actual nodes, the PCnL warning displays.
Action Time	Immediately displays when the fault is detected
Warning Setting Parameter	N/A
Reset Method	When connect BUS to the original slave, or change the configured node numbers to meet the actual node quantity, the warning automatically clears.
Reset Condition	N/A
Record	N/A
Cause	Corrective Actions
The configured node quantity is different from the actual nodes	Connect BUS to the original slave, or change the configured node numbers to meet the actual node quantity.
Communication cable is broken or bad connected	Check or replace the communication cable.

ID No.	Display on LCD Keypad	Warning Name	Description
64	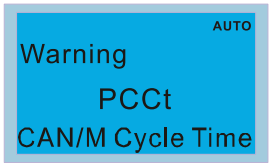	CAN/M cycle time-out (PCCt)	CANopen Master cycle time-out

Action and Reset	
Action Condition	When the transmitted packet from CANopen master exceeds the maximum allowable quantity in a certain time, the PCCt warning displays.
Action Time	Immediately displays when the fault is detected
Warning Setting Parameter	N/A
Reset Method	The warning automatically clears when changing the configuration and re-executing the program.
Reset Condition	N/A
Record	N/A
Cause	Corrective Actions
When the transmitted packet from CANopen master exceeds the maximum allowable quantity in a certain time	Increase the time setting of D1090 synchronization cycle.

ID No.	Display on LCD Keypad	Warning Name	Description
65	AUTO Warning PCSF CAN/M SDO over	CAN/M SDO over (PCSF)	CANopen Master SDO overflow
Action and Reset			
Action Condition		When the CANopen master transmits too much SDO that causes buffer overflow, the PCSF warning displays	
Action Time		Immediately displays when the fault is detected	
Warning Setting Parameter		N/A	
Reset Method		Cycle the power, or stop the PLC and run the PLC again	
Reset Condition		N/A	
Record		N/A	
Cause		Corrective Actions	
Internal PLC transmits too much SDO at once		The PLC program needs to confirm receiving the SDO feedback data before sending another SDO command.	

ID No.	Display on LCD Keypad	Warning Name	Description
66	AUTO Warning PCSd CAN/M Sdo Tout	CAN/M SDO time-out (PCSd)	CANopen Master SDO time-out
Action and Reset			
Action Condition		When the CANopen master sends a SDO command, and the BUS is too busy to transmit the command, PCSd warning displays.	
Action Time		Immediately displays when the fault is detected	
Warning Setting Parameter		N/A	
Reset Method		The warning automatically clears when the SDO transmits normally.	
Reset Condition		N/A	
Record		N/A	
Cause		Corrective Actions	
When the CANopen master transmits a SDO command, and does not receive feedback from the Slave within 1 sec.		Check if the Slave responds within 1 second.	

ID No.	Display on LCD Keypad	Warning Name	Description
67	AUTO Warning PCAd CAN/M Addres set	CAN/M address error (PCAd)	CANopen Master station address error

Action and Reset	
Action Condition	When the CANopen master detects an incorrect or repeated station address from the Slave, the PCAd warning displays.
Action Time	Immediately displays when the fault is detected
Warning Setting Parameter	N/A
Reset Method	The warning automatically clears when reset the station address and run the program again.
Reset Condition	N/A
Record	N/A
Cause	Corrective Actions
When the CANopen master detects an incorrect or repeated station address from the Slave	Set the correct slave station address.

ID No.	Display on LCD Keypad	Warning Name	Description
68	AUTO Warning PCTo CAN/M T-Out	CAN/M time-out (PCTo)	When the drive receives an incorrect packet, it means that there is interference or the command from the upper unit does not meet the CANopen command format.

Action and Reset	
Action Condition	N/A
Action Time	Immediately acts when receiving the command
Warning Setting Parameter	N/A
Reset Method	The warning automatically clears after receives another normal packet
Reset Condition	N/A
Record	N/A
Cause	Corrective Actions
Malfunction caused by interference	1. Verify wiring / grounding of the communication circuit. It is recommended to separate the communication circuit from the main circuit, or wire in 90 degree for effective anti-interference performance. 2. Make sure the communication circuit is wired in series. 3. Use CANopen cable or add terminating resistance.
The command from the upper unit does not meet the CANopen format	Contact Delta for further confirmation.

ID No.	Display on LCD Keypad	Warning Name	Description
70	AUTO Warning ECid ExCom ID failed	ExCom ID fail (ECid)	Duplicate MAC ID error Node address setting error

Action and Reset	
Action Condition	Duplicate setting of MAC ID Node address setting error
Action Time	N/A
Warning Setting Parameter	N/A
Reset Method	Correct the setting and cycle the power
Reset Condition	N/A
Record	N/A
Cause	**Corrective Actions**
The setting address exceeds the range (0–63)	Check the address setting of the communication card (Pr.09-70).
The speed setting exceeds the range	Standard: 0–2, non-standard: 0–7
The address is duplicated with other nodes on the BUS	Reset the address.

ID No.	Display on LCD Keypad	Warning Name	Description
71	AUTO Warning ECLv ExCom pwr loss	ExCom power loss (ECLv)	Low voltage of communication card

Action and Reset	
Action Condition	The 5V power that drive provides to communication card is to low
Action Time	Immediately acts
Warning Setting Parameter	N/A
Reset Method	Re-power
Reset Condition	N/A
Record	N/A
Cause	Corrective Actions
The 5V power that drive provides to communication card is to low	1. Switch the communication card to other CH2000 drives and observe if there is ECLv warning shown. If yes, replace with a new communication card; if not, replace the drive. 2. Use another communication card to test if the ECLv warning has shown as well. If not, replace the card; if yes, replace the drive.
The card is loose	Make sure the communication card is well inserted.

ID No.	Display on LCD Keypad	Warning Name	Description
72	AUTO Warning ECtt ExCom Test Mode	ExCom test mode (ECtt)	Communication card is in the test mode
Action and Reset			
Action Condition		Communication card is in the test mode	
Action Time		Immediately acts	
Warning Setting Parameter		N/A	
Reset Method		Cycle the power and enter the normal mode	
Reset Condition		N/A	
Record		N/A	
Cause		Corrective Actions	
Communication command error		Cycle the power.	

ID No.	Display on LCD Keypad	Warning Name	Description
73	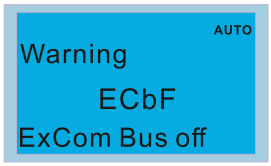	ExCom Bus off (ECbF)	The communication card detects too much errors in the BUS, then enters the BUS-OFF status and stop communicating

Action and Reset	
Action Condition	When the drive detects BUS-off (for DeviceNet)
Action Time	Immediately acts
Warning Setting Parameter	N/A
Reset Method	Cycle the power
Reset Condition	N/A
Record	N/A
Cause	Corrective Actions
Poor connection of the cable	Re-connect the cable.
Bad quality of the cable	Replace the cable.

ID No.	Display on LCD Keypad	Warning Name	Description
74	AUTO Warning ECnP ExCom No power	ExCom no power (ECnP)	There is no power supply on the DeviceNet

Action and Reset	
Action Condition	There is no power supply on the DeviceNet
Action Time	Immediately acts
Warning Setting Parameter	N/A
Reset Method	Re-power
Reset Condition	N/A
Record	N/A
Cause	Corrective Actions
The drive detects that DeviceNet has no power	Check if the cable and power is normal. If yes, return to the factory for repair.

ID No.	Display on LCD Keypad	Warning Name	Description
75	AUTO Warning ECFF ExCom Facty def	ExCom factory defect (ECFF)	Factory default setting error

Action and Reset	
Action Condition	Factory default setting error
Action Time	Immediately acts
Warning Setting Parameter	N/A
Reset Method	Cycle the power
Reset Condition	N/A
Record	N/A
Cause	Corrective Actions
Factory default setting error	Use DCISoft to reset to the default value.

ID No.	Display on LCD Keypad	Warning Name	Description
76	AUTO Warning ECiF ExCom Inner err	ExCom inner error (ECiF)	Serious internal error

Action and Reset	
Action Condition	Internal memory saving error
Action Time	Immediately acts
Warning Setting Parameter	N/A
Reset Method	Cycle the power
Reset Condition	N/A
Record	N/A
Cause	**Corrective Actions**
Noise interference	Verify wiring of the control circuit, and wiring / grounding of the main circuit to prevent interference. Cycle the power.
The memory is broken	Reset to the default value and check if the error still exists. If yes, replace the communication card.

ID No.	Display on LCD Keypad	Warning Name	Description
77	AUTO Warning ECio ExCom IONet brk	ExCom IO Net break (ECio)	IO connection break off
Action and Reset			
Action Condition		IO connection between the communication card and the master is broken off	
Action Time		Immediately acts	
Warning Setting Parameter		N/A	
Reset Method		Manual reset	
Reset Condition		Immediately reset	
Record		N/A	
Cause		Corrective Actions	
The cable is loose		Re-install the cable.	
Incorrect parameter setting for master communication		Check the setting for master communication parameter.	

ID No.	Display on LCD Keypad	Warning Name	Description
78	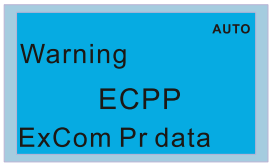	ExCom Parameter data error (ECPP)	Profibus parameter data error

Action and Reset	
Action Condition	N/A
Action Time	N/A
Warning Setting Parameter	N/A
Reset Method	Manual reset
Reset Condition	Immediately reset
Record	N/A
Cause	Corrective Actions
The GSD file is incorrect	Get the correct GSD file from the software.

ID No.	Display on LCD Keypad	Warning Name	Description
79	AUTO Warning ECPi ExCom Conf data	ExCom configuration data error (ECPi)	Profibus configuration data error

Action and Reset	
Action Condition	N/A
Action Time	N/A
Warning Setting Parameter	N/A
Reset Method	Manual reset
Reset Condition	Immediately reset
Record	N/A
Cause	Corrective Actions
The GSD file is incorrect	Get the correct GSD file from the software.

ID No.	Display on LCD Keypad	Warning Name	Description
80	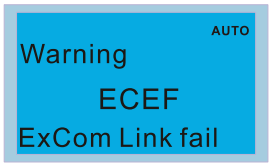	Ethernet link fail (ECEF)	Ethernet cable is not connected

Action and Reset	
Action Condition	Hardware detection
Action Time	Immediately acts
Warning Setting Parameter	N/A
Reset Method	Manual reset
Reset Condition	N/A
Record	N/A
Cause	**Corrective Actions**
Ethernet cable is loose	Re-connect the cable.
Bad quality of Ethernet cable	Replace the cable.

ID No.	Display on LCD Keypad	Warning Name	Description
81	AUTO Warning ECto ExCom Inr T-out	Communication time-out (ECto)	Communication time-out for communication card and the upper unit
Action and Reset			
Action Condition		N/A	
Action Time		N/A	
Warning Setting Parameter		N/A	
Reset Method		N/A	
Reset Condition		CMC-EC01: auto resets when the communication with the upper unit is back to normal	
Record		N/A	
Cause		Corrective Actions	
Communication card is not connected with the upper unit		Check if the connection of the communication cable is correct.	
Communication error of the upper unit		Check if the communication of the upper unit is normal.	

ID No.	Display on LCD Keypad	Warning Name	Description
82	AUTO Warning ECCS ExCom Inr CRC	Checksum error (ECCS)	Checksum error for communication card and the drive
Action and Reset			
Action Condition		Software detection	
Action Time		N/A	
Warning Setting Parameter		N/A	
Reset Method		Manual reset	
Reset Condition		Immediately resets	
Record		N/A	
Cause		Corrective Actions	
Noise interference		Verify wiring of the control circuit, and wiring / grounding of the main circuit to prevent interference.	

ID No.	Display on LCD Keypad	Warning Name	Description
83	AUTO Warning ECrF ExCom Rtn def	Return defect (ECrF)	Communication card returns to the default setting
Action and Reset			
Action Condition		Communication card returns to the default setting	
Action Time		N/A	
Warning Setting Parameter		N/A	
Reset Method		Manual reset	
Reset Condition		Immediately resets	
Record		N/A	
Cause		Corrective Actions	
Communication card is returning to default setting		No actions.	

ID No.	Display on LCD Keypad	Warning Name	Description
84	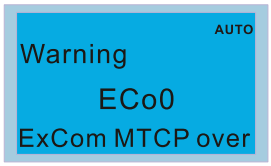	Modbus TCP over (Eco0)	Modbus TCP exceeds maximum communication value

Action and Reset	
Action Condition	Hardware detection
Action Time	Immediately acts
Warning Setting Parameter	N/A
Reset Method	Manual reset
Reset Condition	Immediately resets
Record	N/A
Cause	**Corrective Actions**
The Master communication value is more than the allowable quantity of the communication card	Reduce Master communication value.
The upper unit is online without communicating, and does not break off the Modbus TCP link, causes occupy connection	Revise program of upper unit, the communication should be break off when it is not used for a long time.
A new Modbus TCP connection is built every time when the upper unit is connected to the communication card, which caused occupy connection	Revise program of upper unit: use the same Modbus TCP connection when connected to the same communication card.

ID No.	Display on LCD Keypad	Warning Name	Description
85	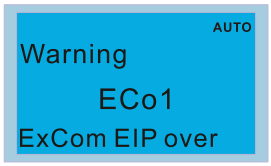	EtherNet/IP over (ECo1)	Ethernet/IP exceeds maximum communication value

Action and Reset	
Action Condition	Hardware detection
Action Time	Immediately acts
Warning Setting Parameter	N/A
Reset Method	Manual reset
Reset Condition	Immediately resets
Record	N/A
Cause	**Corrective Actions**
The Master communication value is more than the allowable quantity of the communication card	Reduce Master communication value.
The upper unit is online without communicating, and does not break off the Modbus TCP link, causes occupy connection	Revise program of upper unit, the communication should be break off when it is not used for a long time.
A new Modbus TCP connection is built every time when the upper unit is connected to the communication card, which caused occupy connection	Revise program of upper unit: use the same Modbus TCP connection when connected to the same communication card.

ID No.	Display on LCD Keypad	Warning Name	Description
86	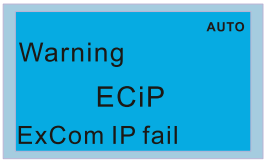	IP fail (ECiP)	IP setting error

Action and Reset	
Action Condition	Software detection
Action Time	Immediately acts
Warning Setting Parameter	N/A
Reset Method	Manual reset
Reset Condition	Immediate reset
Record	N/A
Cause	**Corrective Actions**
IP conflict	Reset IP.
DHCP IP configuration error	MIS check if DHCP Server works normally.

ID No.	Display on LCD Keypad	Warning Name	Description
87	AUTO Warning EC3F ExCom Mail fail	Mail fail (EC3F)	Mail warning: Alarm mail will be sent when the communication card establishes alarm conditions

Action and Reset	
Action Condition	Communication card establishes alarm conditions
Action Time	Immediately acts
Warning Setting Parameter	N/A
Reset Method	Manual reset
Reset Condition	Immediately resets
Record	N/A
Cause	Corrective Actions
Communication card establishes alarm conditions	No actions.

ID No.	Display on LCD Keypad	Warning Name	Description
88	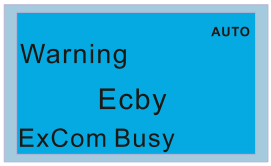	ExCom busy (ECbY)	Communication card busy: too much packets are received

Action and Reset	
Action Condition	Software detection
Action Time	N/A
Warning Setting Parameter	N/A
Reset Method	Manual reset
Reset Condition	N/A
Record	N/A
Cause	**Corrective Actions**
Communication packets are too much for the communication card to process	Reduce communication packets.

ID No.	Display on LCD Keypad	Warning Name	Description
89	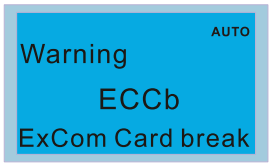	ExCom card break (ECCb)	Communication card break off warning
Action and Reset			
Action Condition		Communication card break off	
Action Time		The time between communication card break off and ECCb displays: 1. EtherNet/IP: 3 sec. 2. Modbus TCP: 3 sec. 3. DeviceNet: 1 sec. 4. PROFIBUS: 1 sec. 5. EtherCAT: 0.1 sec.	
Warning Setting Parameter		N/A	
Reset Method		Auto resets after communication card is re-installed	
Reset Condition		Immediately resets	
Record		N/A	
Cause		Corrective Actions	
Communication card break off		Re-install communication card.	

ID No.	Display on LCD Keypad	Warning Name	Description
90	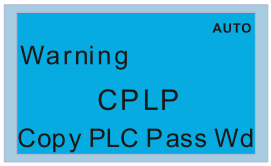	Copy PLC: password error (CPLP)	Copy PLC password error. When KPC-CC01 is processing PLC copy and the PLC password is incorrect, the CPLP warning shows.

Action and Reset	
Action Condition	PLC password is incorrect
Action Time	Immediately acts
Warning Setting Parameter	N/A
Reset Method	Manual reset
Reset Condition	Directly resets
Record	N/A
Cause	Corrective Actions
PLC password is incorrect	Reset and enter correct PLC password.

ID No.	Display on LCD Keypad	Warning Name	Description
91	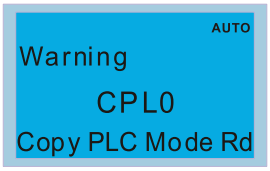	Copy PLC: Read mode error (CPL0)	Copy PLC Read mode error

Action and Reset	
Action Condition	When copy PLC read mode with incorrect process
Action Time	Immediately acts
Warning Setting Parameter	N/A
Reset Method	Manual reset
Reset Condition	Directly resets
Record	N/A
Cause	**Corrective Actions**
When copy PLC read mode and the process is incorrect	Cycle the power and copy PLC read mode again.

ID No.	Display on LCD Keypad	Warning Name	Description
92	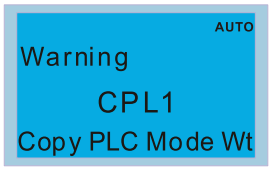	Copy PLC: Write mode (CPL1)	Copy PLC write mode error

Action and Reset	
Action Condition	Copy PLC write mode with incorrect process
Action Time	Immediately acts
Warning Setting Parameter	N/A
Reset Method	Manual reset
Reset Condition	Directly resets
Record	N/A
Cause	**Corrective Actions**
When copy PLC write mode and the process is incorrect	Cycle the power and copy PLC read mode again.

ID No.	Display on LCD Keypad	Warning Name	Description
93	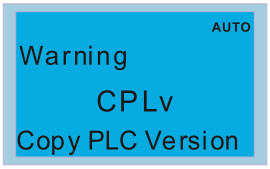	Copy PLC: version error (CPLv)	Copy PLC version error. When non-CH2000 built-in PLC is copied to CH2000 drive, the CPLv warning shows

Action and Reset	
Action Condition	Software detection
Action Time	Immediately acts
Warning Setting Parameter	N/A
Reset Method	Manual reset
Reset Condition	Directly resets
Record	N/A
Cause	**Corrective Actions**
Non-CH2000 PLC program is copied to CH2000	Check if the copied PLC program is for CH2000. Use the correct CH2000 PLC program.

ID No.	Display on LCD Keypad	Warning Name	Description
94	AUTO Warning CPLS Copy PLC Size	Copy PLC: size error (CPLS)	Copy PLC Capacity size error

Action and Reset	
Action Condition	Software detection
Action Time	Immediately acts
Warning Setting Parameter	N/A
Reset Method	Manual reset
Reset Condition	Directly resets
Record	N/A
Cause	Corrective Actions
The PLC copied to CH2000 exceeds the allowable capacity	Check if the copied PLC program is for CH2000. Use CH2000 PLC program with correct capacity.

ID No.	Display on LCD Keypad	Warning Name	Description
95		Copy PLC: PLC function (CPLF)	KPC-CC01 Copy PLC function should be executed when PLC is off

Action and Reset	
Action Condition	Software detection
Action Time	Immediately acts
Warning Setting Parameter	N/A
Reset Method	Manual reset
Reset Condition	Directly resets
Record	N/A
Cause	**Corrective Actions**
PLC function is enabled when KPC-CC01 is running copy PLC	Disable PLC function first, then run the PLC copy function again.

ID No.	Display on LCD Keypad	Warning Name	Description
96	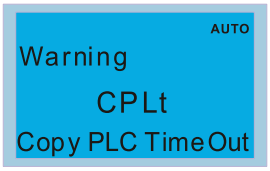	Copy PLC: time-out (CPLt)	Copy PLC time out

Action and Reset	
Action Condition	Software detection
Action Time	Immediately acts
Warning Setting Parameter	N/A
Reset Method	Manual reset
Reset Condition	Directly resets
Record	N/A
Cause	**Corrective Actions**
KPC-CC01 is removed while copying PLC program	The KPC-CC01 cannot be removed during the PLC copy process.

ID No.	Display on LCD Keypad	Warning Name	Description
101	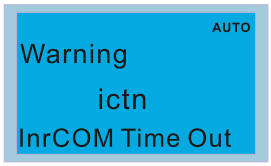	InrCOM time-out (ictn)	Internal communication time-out

Action and Reset	
Action Condition	When Pr.09-31 = (-1) – (-10) (no -9) and the internal communication between Master and Slave is abnormal, the ictn warning shows.
Action Time	Immediately acts
Warning Setting Parameter	N/A
Reset Method	Auto-reset
Reset Condition	The warning automatically clears when the communication is back to normal condition
Record	N/A
Cause	Corrective Actions
Malfunction caused by interference	Verify wiring / grounding of the communication circuit. It is recommended to separate the communication circuit from the main circuit, or wire in 90 degree for effective anti-interference performance.
Different communication conditions with the upper unit	Check if the setting for Pr.09-04 is the same as the setting for upper unit.
Communication cable break off or not connected well	Check the cable status or replace the cable.

ID No.	Display on LCD Keypad	Warning Name	Description
105	AUTO Warning SpdR Est-Speed REV	Estimated speed reverse (SpdR)	Estimated speed is in a reverse direction with motor actual running direction

Action and Reset	
Action Condition	Software detection
Action Time	Pr.10-09
Warning Setting Parameter	Pr.10-08 0: Warn and keep operation 1: Fault and coast to stop 2: Fault and ramp to stop
Reset Method	Manual reset
Reset Condition	Immediately resets
Record	N/A

Cause	Corrective Actions
The motor runs in reverse direction at start	Check if the motor is hold when started, or start the motor with speed source.
The difference between motor parameter measured Rr and Rs value is too large	Normally the Rr value of IM is Rs × 0.7. If there is much difference of the measured value (e.g. Rr = Rs × 0.3), proceed the motor parameter auto-tuning again.
Insufficient output torque is dragged to the reverse direction by the load.	Increase the current limit of Pr.06-12, so as to increase the output torque.

ID No.	Display on LCD Keypad	Warning Name	Description
123	AUTO Warning dEb Dec. Energy backup	Deceleration energy backup (dEb)	Deceleration energy backup

Action and Reset	
Action condition	Software detection
Action time	N/A
Warning setting parameter	0: Disable 1: dEb with auto accel. / decel., the output frequency will note return after power reply. 2: dEb with auto accel. / decel., the output frequency will return after power reply. 3: dEb low-voltage control, then increase to 350 V_{DC} / 700 V_{DC} and decelerate to stop. 4: dEb high-voltage control of 350 V_{DC} / 700 V_{DC} and decelerate to stop
Reset method	Manual reset
Reset condition	Immediately resets
Record	N/A
Cause	Corrective Actions
Instantaneous power off or low voltage and unstable / sudden heavy load of the power that cause the voltage drop	Check the power consumption.
Unexpected power off	Check the power consumption.

ID No.	Display on LCD Keypad	Warning Name	Description
125	AUTO Warning INDX Index Pulse Fail	Index Pulse fail (INDX)	1. The Z position difference is bigger than 2 and occurs twice. Besides, more than 20 Z position differences bigger than 2 occur in 1 second, 2. The two index position differences > 10 degree mechanical angle. The two situations mentioned above cause Index Pulse Fail.

Action and Reset	
Action Condition	N/A
Action Time	1 second
Warning Setting Parameter	N/A
Reset Method	Auto-reset after resolving the trouble.
Reset Condition	N/A
Record	N/A
Cause	Corrective Actions
Zindex may be affected by noise	Verify if the wiring of the control circuit, the wiring of the main circuit and the grounding wiring are compatible to the noise immunity.

ID No.	Display on LCD Keypad	Warning Name	Description
126	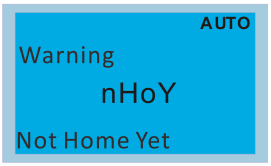	Not Home yet (nHoY)	The motor drive receives an absolute motion command before homing is completed.
Action and Reset			
Action Condition	N/A		
Action Time	Immediate acts		
Warning Setting Parameter	N/A		
Reset Method	Press the STOP button on the keypad after you stop running the motor drive,		
Reset Condition	Immediately reset		
Record	No		
Cause	Corrective Actions		
Error on the time sequence of system control.	Verify if anything wrong on the time sequence.		
Speed of homing is too slow	Verify if the frequency setting of homing is too slow which causes error on the control time sequence of the upper unit.		

ID No.	Display on LCD Keypad	Warning Name	Description
127	AUTO Warning HPL HW POS Limit	HW POS limit (HPL)	When the drive is in FOCPG mode, the positive running limit (hardware limit switch) of the MI terminals is activated.

Action and Reset	
Action Condition	When the drive is in IMFOCPG / PMFOCPG mode, the motor drive reaches positive running limit.
Action Time	Immediate acts
Warning Setting Parameter	N/A
Reset Method	Move the motor away from the limit position, the warning automatically clears.
Reset Condition	Immediate resets
Record	No
Cause	Corrective Actions
Error occurs on hardware limit switch	1. Verify if the switch of hardware limit works properly. 2. Verify if the switch of hardware limit is installed at the right position. 3. Verify if the corresponding MI terminals of the positive limit switch is at the right status such as Normal Open and Normal Close.
Overshoot	1. Verify if the Acceleration/ Deceleration time of the motor drive is right. 2. Verify if the frequency command of the motor drive is right.
Select the wrong homing method	Verify if the mechanical parts and homing method co-work properly.

ID No.	Display on LCD Keypad	Warning Name	Description
128	AUTO Warning HnL HW NEG Limit	HW NEG limit (HnL)	When the drive is in FOCPG mode, the negative running limit (hardware limit switch) of the MI terminals is activated.

Action and Reset	
Action Condition	When the drive is in IMFOCPG / PMFOCPG mode, the motor drive reaches negative running limit.
Action Time	Immediate acts
Warning Setting Parameter	N/A
Reset Method	Move the motor away from the limit position, the warning automatically clears.
Reset Condition	Immediate resets
Record	No
Cause	Corrective Actions
Error occurs on hardware limit switch	1. Verify if the switch of hardware limit works properly. 2. Verify if the switch of hardware limit is installed at the right position. 3. Verify if the corresponding MI terminals of the positive limit switch is at the right status such as Normal Open and Normal Close.
Overshoot	1. Verify if the acceleration/ deceleration time of the motor drive is right. 2. Verify if the frequency command of the motor drive is right.
Select the wrong homing method	Verify if the mechanical parts and homing method co-work properly.

ID No.	Display on LCD Keypad	Warning Name	Description
129	AUTO Warning SPL SW POS Limit	SW POS Limit (SPL)	When the drive is in FOCPG mode, the feedback position of the motor is higher than or equal to the software positive limit set by the parameters.

Action and Reset	
Action Condition	Pr.11-56, Pr.11-57
Action Time	Immediate acts
Warning Setting Parameter	N/A
Reset Method	Move the motor away from the limit position, the warning automatically clears.
Reset Condition	Immediate resets
Record	No
Cause	**Corrective Actions**
Error occurs on software limit switch	Verify if the setting of software limit switch at Pr.11-56 and Pr.11-57 is correct.
Overshoot	1. Verify if the acceleration/ deceleration time of the motor drive is correct. 2. Verify if the frequency command of the motor drive is correct.

ID No.	Display on LCD Keypad	Warning Name	Description
130	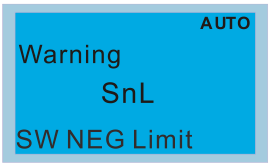	SW NEG limit (SnL)	When the drive is in FOCPG mode, the feedback position of the motor is lower than or equal to the negative limit set by the parameters.

Action and Reset	
Action Condition	Pr.11-58, Pr.11-59
Action Time	Immediate acts
Warning Setting Parameter	N/A
Reset Method	Move the motor away from the limit position, the warning automatically clears.
Reset Condition	Immediate reset
Record	No
Cause	**Corrective Actions**
Error occurs on software limit switch	Verify if the setting of software limit switch at Pr.11-58 and Pr.11-59 is correct.
Overshoot	1. Verify if the acceleration/ deceleration time of the motor drive is correct. 2. Verify if the frequency command of the motor drive is correct.

ID No.	Display on LCD Keypad	Warning Name	Description
131	AUTO Warning PoF Posn Overflow	Position overflow (PoF)	When the position record is bigger than the setting range at Pr.11-75.
Action and Reset			
Action Condition	Verify if the current position is over the setting range at Pr.11-75.		
Action Time	Immediate acts		
Warning Setting Parameter	N/A		
Reset Method	Stop running the motor drive, then manual reset.		
Reset Condition	Immediate reset		
Record	No		
Cause	Corrective Actions		
Homing process incomplete	Verify if the homing process is completed.		
Position record is bigger than the setting range at Pr.11-75	Verify if the current position is over the upper and lower limit of Pr.11-75.		

ID No.	Display on LCD Keypad	Warning Name	Description
132	AUTO Warning HPF Home Proc. Fault	Homing process fault (HPF)	Unusual signal occurs during the homing process
Action and Reset			
Action Condition	N/A		
Action Time	Immediate acts		
Warning Setting Parameter	N/A		
Reset Method	Stop running the motor drive, then manual reset.		
Reset Condition	Immediately resets		
Record	No		
Cause	Corrective Actions		
Unusual external signal is enabled	Verify if there's any error or signal is enabled and then interrupts the homing process.		
Press the STOP button during the homing process	Verify if anything wrong at control sequence.		

ID No.	Display on LCD Keypad	Warning Name	Description
133	AUTO Warning oPE Over Pos Err Lim	Over position error limit (oPE)	This warning code occurs: 1. When the positioning error of a position controller is bigger than the Pr.11-51 <Maximum allowable position-following error>. 2. And when Pr.11-54: Treatment to the large position control error is set as 0: Warn and continue operation

Action and Reset	
Action Condition	Pr.11-51
Action Time	Immediate acts
Warning Setting Parameter	Pr.11-54
Reset Method	When the position following error is smaller than the maximum allowable position error, the warning automatically resets.
Reset Condition	Immediately resets
Record	No

Cause	Corrective Actions
Acceleration/ Deceleration time error.	Verify if the acceleration time and the deceleration time is correct.
Setting value of Pr.11-51 may be too small.	Verify if the setting value of Pr.11-51 is too small.
The position control may not be working properly.	1. Verify if the position control works properly. 2. Verify if the settings of APR bandwidth control and the gain value for the APR feed forward are correct.
The setting of command curve at the upper unit during the whole pulse positioning process may not be right.	If you set Pr.11-40 =1 (Input from external pulse) or set MI=90 (Position command source switch and choose 1: Input from external pulse), you need to verify if the acceleration/ deceleration curve of the pulse given by the upper unit is correct.

ID No.	Display on LCD Keypad	Warning Name	Description
134	AUTO Warning EcLB Enc Low Batt	Encoder low battery (EcLB)	Communication encoder low battery
Action and Reset			
Action Condition	When the encoder battery power is lower than 3.1 V		
Action Time	Immediate action		
Warning Setting Parameter	N/A		
Reset Method	Cut off the power and replace the battery		
Reset Condition	Replace the encoder's external battery		
Record	No		
Cause	Corrective Actions		
Encoder low battery	1. Reset the fault, and replace the battery when the drive stops. 2. If you are not using the multi-turn position data, the encoder does not need the battery. You can set Pr.10-23 bit0 = 0 to disable the battery low voltage detection warning.		

ID No.	Display on LCD Keypad	Warning Name	Description
135	AUTO Warning EcOF Enc Pos OverFlow	Encoder multi-turn overflows (EcOF)	Encoder multi-turn overflows

Action and Reset	
Action Condition	When the multi-turn position counter exceeds the encoder's maximum counter value
Action Time	Immediate action
Warning Setting Parameter	Pr.10-60: bit8–11 0: Warn but continue operating unit the drive stops 1: Warn and stop 2: No warning and no stop
Reset Method	Manual reset
Reset Condition	Immediate reset
Record	No
Cause	Corrective Actions
The encoder rotation turns exceeds the counter range	1. Reboot the drive and re-execute the homing process. 2. If the operation mode is speed mode and the application is rotating axis (Pr.10-60 bit4–7 Coordinate axis mode = 1 Rotating axis 1 or = 2 Rotating axis 2), set Pr.10-60 bit8–11: Encoder overflow treatment = 2 "No warn and no stop".

ID No.	Display on LCD Keypad	Warning Name	Description
136	AUTO Warning DDUE D2D Unestablish	D2D unestablish (DDUE)	D2D communication is not established

Action and Reset	
Action Condition	When the D2D communicatino configuration is enabled, but the communication has not beed established, the warning is issued
Action Time	Immediate action
Warning Setting Parameter	N/A
Reset Method	Auto reset after the D2D communication is established
Reset Condition	Immediate reset
Record	No
Cause	Corrective Actions
D2D communication is not established	1. Check the D2D communication configuration: A. When the drive is the Master, verify if the D2D configuration of all Slaves for the D2D communication are enabled B. When the drive is Slave, check whether the Master has enabled the D2D configuration 2. Verify if the communication wiring are connected correctly 3. Verify if the D2D communication works normally

ID No.	Display on LCD Keypad	Warning Name	Description
137	AUTO Warning DDTO D2D Timeout	D2D Timeout (DDTO)	D2D communication time-out
Action and Reset			
Action Condition	After establishing D2D communication, the communication abnormality continues when the number of communication abnormality reaches the threshold. **NOTE:** 1. Assume the AC motor drive is the D2D Master, as long as the drive has abnormal communication with any of the Slave, it is regarded as communication abnormlity. 2. The communication abnormality threshold from D2D Master station to the Slave station is 3. 3. The communication abnormality threshold from D2D Slave station to the Master station is 1. 4. The DDTO warning code only supports high-speed mode D2D communication (Pr.09-29 bit0=0).		
Action Time	The action time is determined by the number of communication abnormlity threshold 1. The communication abnormality threshold from D2D Master station to the Slave station is 3. 2. The communication abnormality threshold from D2D Slave station to the Master station is 1.		
Warning Setting Parameter	N/A		
Reset Method	D2D communication works normally		
Reset Condition	Immediate reset		
Record	No		
Cause	Corrective Actions		
Communication abnormal	1. Verify if the communication wiring is correct. 2. Verify if the D2D communication works normally.		

Chapter 14 Fault Codes and Descriptions

Summary of Fault Codes

ID No.	Fault Name	ID No.	Fault Name
0	No fault record	34	V-phase error (cd2)
1	Over-current during acceleration (ocA)	35	W-phase error (cd3)
2	Over-current during deceleration (ocd)	36	cc hardware failure (Hd0)
3	Over-current during steady operation (ocn)	37	oc hardware error (Hd1)
4	Ground fault (GFF)	38	ov hardware error (Hd2)
5	IGBT short circuit between upper bridge and lower bridge (occ)	39	occ hardware error (Hd3)
6	Over-current at stop (ocS)	40	Auto-tuning error (AUE)
7	Over-voltage during acceleration (ovA)	41	PID loss ACI (AFE)
8	Over-voltage during deceleration (ocd)	42	PG feedback error (PGF1)
9	Over-voltage at constant speed (ovn)	43	PG feedback loss (PGF2)
10	Over-voltage at stop (ovS)	44	PG feedback stall (PGF3)
11	Low-voltage during acceleration (LvA)	45	PG slip error (PGF4)
12	Low-voltage during deceleration (Lvd)	48	ACI loss (ACE)
13	Low-voltage at constant speed (Lvn)	49	External fault (EF)
14	Low-voltage at stop (LvS)	50	Emergency stop (EF1)
15	Phase loss protection (OrP)	51	External base block (bb)
16	IGBT overheating (oH1)	52	Password is locked (Pcod)
17	Overheat key components (oH2)	53	SW code error (ccod)
18	IGBT temperature detection failure (tH1o)	54	Illegal command (CE1)
19	Capacitor hardware error (tH2o)	55	Illegal data address (CE2)
21	Over load (oL)	56	Illegal data value (CE3)
22	Electronic thermal relay 1 protection (EoL1)	57	Data is written to read-only address (CE4)
23	Electronic thermal relay 2 protection (EoL2)	58	Modbus transmission time-out (CE10)
24	Motor overheating (oH3) PTC / PT100	60	Brake transistor error (bF)
25	Interrupt error (INTR)	61	Y-connection / D-connection switch error (ydc)
26	Over torque 1 (ot1)	62	Deceleration energy backup error (dEb)
27	Over torque 2 (ot2)	63	Over slip error (oSL)
28	Under current (uC)	64	Electric valve switch error (ryF)
29	Limit Error (LiT)	65	Hardware error of PG card (PGF5)
30	EEPROM write error (cF1)	68	Reverse direction of the speed feedback (SdRv)
31	EEPROM read error (cF2)	69	Over speed rotation feedback (SdOr)
33	U-phase error (cd1)	112	PMLess shaft lock (SfLK)

ID No.	Fault Name	ID No.	Fault Name
70	Large deviation of speed feedback (SdDe)	142	Auto-tune error 1 (AUE1)
71	Watchdog (WDTT)	143	Auto-tune error 2 (AUE2)
72	STO Loss 1 (STL1)	144	Auto-tune error 3 (AUE3)
73	Emergency stop for external safety (S1)	148	Auto-tune error 4 (AUE4)
75	External brake error (Brk)	171	Over position error (oPEE)
76	STO (STO)	174	Encoder error (EcEr)
77	STO Loss 2 (STL2)	175	Encoder communication error (EcCe)
78	STO Loss 3 (STL3)	176	Encoder position overflows (EcOF)
82	Output phase loss U phase (OPHL)	177	Encoder battery no power (EcNP)
83	Output phase loss V phase (OPHL)	178	Encoder multi-turn error (EcMc)
84	Output phase loss W phase (OPHL)	179	PG multi-turn read error (PgMr)
85	PG ABZ line off (AboF)	180	Encoder single-turn error (EcSc)
86	PG UVW line off (UvoF)	181	PG command error (PgCe)
87	Overload protection at low frequency (oL3)	182	Interpolation time error (IPTE)
88	CPU timing error 1 (INTR1)	183	Interpolation command failure (IPCM)
89	Rotor position detection error (RoPd)	184	No motion control (NoMo)
90	Force to stop (FStp)	185	Motor code error (Moto)
92	Pulse tuning Ld / Lq error (LEr)	186	D2D Timeout (DDTO)
93	CPU error 0 (TRAP)	187	Flux linkage observer failure (FobF)
101	CANopen guarding error (CGdE)	188	Load estimation error (TLAT)
102	CANopen heartbeat error (CHbE)	189	Inertia estimation error (JsAT)
104	CANopen bus off error (CbFE)	190	Bandwidth estimation error (BWAT)
105	CANopen index error (CIdE)	191	Positioning failure during estimation (ATPF)
106	CANopen station address error (CAdE)	192	Homing deviation is too large (HmOE)
107	CANopen memory error (CFrE)	193	Cleaning multi-turn data failure (CMTE)
111	InrCOM time-out error (ictE)	195	ASR AT process is too short (ATTv)

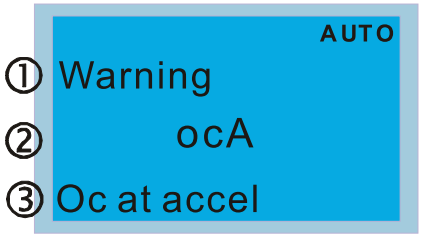

① Display error signal
② Abbreviate error code
③ Display error description

ID	Display on LCD Keypad	Fault Name	Fault Descriptions
1	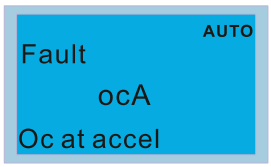	Over-current during acceleration (ocA)	Output current exceeds 3 times of rated current during acceleration. When ocA occurs, the drive closes the gate of the output immediately, the motor runs freely, and the display shows an ocA error.

Action and Reset	
Action Condition	300% of rated current
Action Time	Immediately act
Fault Treatment Parameter	N/A
Reset Method	Manual reset
Reset Condition	Reset in 5 sec. after the fault is cleared
Record	Yes
Cause	**Corrective Actions**
Acceleration time is too short	1. Increase the acceleration time 2. Increase the acceleration time of S curve 3. Set auto-acceleration and auto-deceleration parameter (Pr.01-44) 4. Set over-current stall prevention function (Pr.06-03) 5. Replace the drive with a larger capacity model.
Short circuit at motor output due to poor insulation wiring	Check the motor cable and remove causes of the short circuits or replace the cable before turning on the power.
Check for possible burnout or aging insulation of the motor	Check the motor insulation value with megger. Replace the motor if the insulation is poor.
The load is too large.	Check if the output current during the whole working process exceeds the AC motor drive's rated current. If yes, replace the AC motor drive with a larger capacity model.
Impulsive change of the load	Reduce the load or increase the capacity of AC motor drive.
Use special motor or motor with larger capacity than the drive	Check the motor capacity (the rated current on the motor's nameplate should ≤ the rated current of the drive)
Use ON/OFF controller of an electromagnetic contactor at the output (U/V/W) of the drive	Check the action timing of the contactor and make sure it is not turned ON / OFF when the drive outputs the voltage.
V/F curve setting error	Adjust V/F curve setting and frequency/voltage. When the fault occurs, and the frequency voltage is too high, reduce the voltage.
Torque compensation is too large	Adjust the torque compensation (refer to Pr.07-26 torque compensation gain) until the output current reduces and the motor does not stall.
Malfunction caused by interference	Verify the wiring of the control circuit and wiring/grounding of the main circuit to prevent interference.
The motor starts when in free run	Enable the speed tracking during start-up of Pr.07-12.
Improper parameter settings for the speed tracking function (including restart after momentary power loss and restart after fault)	Correct the parameter settings for speed tracking. 1. Start the speed tracking function. 2. Adjust the maximum current for Pr.07-09 speed tracking.

Cause	Corrective Actions
Incorrect combination of control mode and used motor	Check the settings for Pr. 00-11 control mode: 1. For IM, Pr.00-11 = 0, 2, 3, 5 2. For PM, Pr.00-11 = 4, 6, or 7
The length of motor cable is too long	Increase AC motor drive's capacity. Install AC reactor(s) on the output side (U/V/W).
Hardware failure	The ocA occurs due to short circuit or ground fault at the output side of the drive. Check for possible short circuits between terminals with the electric meter: B1 corresponds to U, V, W; DC- corresponds to U, V, and W; ⏚ corresponds to U, V, and W. If short circuit occur, return to the factory for repair.
Check if the setting for stall prevention is correct	Set the stall prevention to the proper value.

ID	Display on LCD Keypad	Fault Name	Fault Descriptions
2	AUTO Fault ocd Oc at decel	Over-current during deceleration (ocd)	Output current exceeds 3 times of rated current during deceleration. When ocd occurs, the drive closes the gate of the output immediately, the motor runs freely, and the display shows an ocd error.

Action and Reset	
Action Condition	300% of rated current
Action Time	Immediately act
Fault Treatment Parameter	N/A
Reset Method	Manual reset
Reset Condition	Reset in 5 sec. after the fault is cleared
Record	Yes
Cause	Corrective Actions
Deceleration time too short	1. Increase the deceleration time. 2. Increase the deceleration time of S-curve. 3. Set auto-acceleration and auto-deceleration parameter (Pr.01-44). 4. Set over-current stall prevention function (Pr.06-03). 5. Replace the drive with a larger capacity model.
Check if the mechanical brake of the motor activates too early	Check the action timing of the mechanical brake.
Short-circuit at motor output due to poor insulation wiring	Check the motor cable and remove causes of the short circuits or replace the cable before turning on the power.
Check for possible burnout or aging insulation of the motor	Check the motor insulation value with megger. Replace the motor if the insulation is poor.
The load is too large	Check if the output current during the whole working process exceeds the AC motor drive's rated current. If yes, replace the AC motor drive with a larger capacity model.
Impulsive change of the load	Reduce the load or increase the capacity of AC motor drive.
Use special motor or motor with larger capacity than the drive	Check the motor capacity (the rated current on the motor's nameplate should ≤ the rated current of the drive).
Use ON/OFF controller of an electromagnetic contactor at the output (U/V/W) of the drive	Check the action timing of the contactor and make sure it is not turned ON / OFF when the drive outputs the voltage.
V/F curve setting error	Adjust V/F curve settings and frequency/voltage. When the fault occurs, and the frequency voltage is too high, reduce the voltage.
Torque compensation is too large	Adjust the torque compensation (refer to Pr.07-26 torque compensation gain) until the output current reduces and the motor does not stall.
Malfunction caused by interference	Verify the wiring of the control circuit and wiring/grounding of the main circuit to prevent interference.
The length of motor cable is too long	Increase AC motor drive's capacity. Install AC reactor(s) on the output side (U/V/W).
Hardware error	The ocd occurs due to short circuit or ground fault at the output side of the drive. Check for possible short circuits between terminals with the electric meter: B1 corresponds to U, V, W; DC- corresponds to U, V, and W; ⏚ corresponds to U, V, and W. If short circuits occur, return to the factory for repair.
Check if the setting of stall prevention is correct	Set the stall prevention to the proper value.

ID	Display on LCD Keypad	Fault Name	Fault Descriptions
3	AUTO Fault ocn Oc at normal SPD	Over-current during steady operation (ocn)	Output current exceeds 3 times of the rated current during constant speed. When ocn occurs, the drive closes the gate of the output immediately, the motor runs freely, and the display shows an ocn error.

Action and Reset	
Action Condition	300% of rated current
Action Time	Immediately act
Fault Treatment Parameter	N/A
Reset Method	Manual reset
Reset Condition	Reset in 5 sec. after the fault is cleared
Record	Yes

Cause	Corrective Actions
Short-circuit at motor output due to poor insulation wiring	Check the motor cable and remove causes of the short circuits, or replace the cable before turning on the power.
Check for possible shaft lock, burnout or aging insulation of the motor	Troubleshoot the motor shaft lock. Check the motor insulation value with megger. Replace the motor if the insulation is poor.
Impulsive change of the load	Reduce the load or increase the capacity of AC motor drive.
Use special motor or motor with larger capacity than the drive	Check motor capacity (the rated current on the motor's nameplate should ≤ the rated current of the drive)
Use ON/OFF controller of an electromagnetic contactor at the output (U/V/W) of the drive	Check the action timing of the contactor and make sure it is not turned ON / OFF when the drive outputs the voltage.
V/F curve setting error	Adjust V/F curve settings and frequency/voltage. When the fault occurs, and the frequency voltage is too high, reduce the voltage.
Over-torque offset value too high	Adjust over-torque offset value (Refer to Pr.07-26 torque compensation gain), until the output current is reduced and not motor stall.
Torque compensation is too large.	Adjust the torque compensation (refer to Pr.07-26 torque compensation gain) until the output current reduces and the motor does not stall.
Malfunction caused by interference	Verify the wiring of the control circuit and wiring/grounding of the main circuit to prevent interference.
The length of motor cable is too long	Increase the AC motor drive's capacity. Install AC reactor(s) on the output side (U/V/W).
Hardware failure	The ocn occurs due to short circuit or ground fault at the output side of the drive. Check for possible short circuit between terminals with the electric meter: B1 corresponds to U, V, W; DC- corresponds to U, V, and W; ⏚ corresponds to U, V, and W. If short circuits occur, return to the factory for repair.

ID	Display on LCD Keypad	Fault Name	Fault Descriptions
4	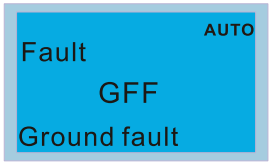	Ground fault (GFF)	When (one of) the output terminal(s) is grounded, short circuit current is larger than Pr.06-60 setting value, and the detection time is longer than Pr.06-61 time setting, GFF occurs. **NOTE:** the short circuit protection is provided for AC motor drive protection, not to protect the user.

Action and Reset	
Action Condition	Pr.06-60 (Default = 60%)
Action Time	Pr.06-61 (Default = 0.10 sec.)
Fault Treatment Parameter	N/A
Reset Method	Manual reset
Reset Condition	Reset in 5 sec. after the fault is cleared
Record	Yes

Cause	Corrective Actions
Motor burnout or aging insulation occurred	Check the motor insulation value with megger. Replace the motor if the insulation is poor.
Short circuit due to broken cable	Troubleshoot the short circuit. Replace the cable.
Larger stray capacitance of the cable and terminal ⏚	If the motor cable length exceeds 100 m, decrease the setting value for carrier frequency. Take remedies to reduce stray capacitance.
Malfunction caused by interference	Verify the grounding and wiring of the communication circuit. It is recommended to separate the communication circuit from the main circuit, or wire in 90 degree for effective sufficient anti-interference performance.
Hardware failure	Cycle the power after checking the status of motor, cable and cable length. If GFF still exists, return to the factory for repair.

ID	Display on LCD Keypad	Fault Name	Fault Descriptions
5	AUTO Fault occ Short Circuit	IGBT short circuit between upper bridge and lower bridge (occ)	Short-circuit is detected between upper bridge and lower bridge of the IGBT module

Action and Reset	
Action Condition	Hardware protection
Action Time	Immediately act
Fault Treatment Parameter	N/A
Reset Method	Manual reset
Reset Condition	Reset in 5 sec. after the fault is cleared
Record	Yes
Cause	**Corrective Actions**
IGBT error	Check the motor wiring. Cycle the power, if occ still exists, return to the factory for repair.
Short-circuit detecting circuit error	

ID	Display on LCD Keypad	Fault Name	Fault Descriptions
6	AUTO Fault ocS Oc at stop	Over-current at stop (ocS)	Over-current or hardware failure in current detection at stop. Cycle the power after ocS occurs. If the hardware failure occurs, the display shows cd1, cd2 or cd3.

Action and Reset	
Action Condition	240% of rated current
Action Time	Immediately act
Fault Treatment Parameter	N/A
Reset Method	Manual reset
Reset Condition	Reset in 5 sec. after the fault is cleared
Record	Yes
Cause	**Corrective Actions**
Malfunction caused by interference	Verify the wiring of the control circuit and wiring / grounding of the main circuit to prevent interference.
Hardware failure	Check if other error code such as cd1–cd3 occur after cycling the power. If yes, return to the factory for repair.

ID	Display on LCD Keypad	Fault Name	Fault Descriptions
7	AUTO Fault ovA Ov at accel	Over-voltage during acceleration (ovA)	DC bus over-voltage during acceleration. When ovA occurs, the drive closes the gate of the output, the motor runs freely, and the display shows an ovA error.

Action and Reset	
Action Condition	820 V_{DC}
Action Time	Immediately act when DC bus voltage is higher than the condition
Fault Treatment Parameter	N/A
Reset Method	Manual reset
Reset Condition	Reset only when DC bus voltage is lower than 90% of the over-voltage condition
Record	Yes

Cause	Corrective Actions
Acceleration is too slow (e.g. hen lifting load decreases acceleration time)	Decrease the acceleration time Use brake unit or DC bus Replace the drive with a larger capacity model.
The setting for stall prevention condition is smaller than no-load current	The setting for stall prevention condition should be larger than no-load current
Power voltage is too high	Check if the input voltage is within the rated AC motor drive input voltage range, and check for possible voltage spikes.
ON/OFF switch action of phase-in capacitor in the same power system	If the phase-in capacitor or active power supply unit acts in the same power system, the input voltage may surge abnormally in a short time. In this case, install an AC reactor.
Regenerative voltage of motor inertia	Use over-voltage stall prevention function (Pr.06-01) Use auto-acceleration and auto-deceleration setting (Pr.01-44) Use a brake unit or DC bus
Acceleration time is too short	Check if the over-voltage warning occurs after acceleration stops. When the warning occurs, do the following: 1. Increase the acceleration time 2. Set Pr.06-01 over-voltage stall prevention 3. Increase setting value for Pr.01-25 S-curve acceleration arrival time 2
Motor ground fault	The ground short circuit current charges the capacitor in the main circuit through the power. Check if there is ground fault on the motor cable, wiring box and its internal terminals. Troubleshoot the ground fault.
Incorrect wiring of brake resistor or brake unit	Check the wiring of brake resistor and brake unit.
Malfunction caused by interference	Verify the wiring of the control circuit and wiring/grounding of the main circuit to prevent interference.

ID	Display on LCD Keypad	Fault Name	Fault Descriptions
8	Fault AUTO ovd Ov at decel	Over-voltage during deceleration (ovd)	DC bus over-voltage during deceleration. When ovd occurs, the drive closes the gate of the output immediately, the motor runs freely, and the display shows an ovd error.

Action and Reset	
Action Condition	820 V_{DC}
Action Time	Immediately act when DC bus voltage is higher than the condition
Fault Treatment Parameter	N/A
Reset Method	Manual reset
Reset Condition	Reset only when DC bus voltage is lower than 90% of the over-voltage condition
Record	Yes
Cause	**Corrective Actions**
Deceleration time is too short, causing too large regenerative energy of the load	1. Increase the setting value of Pr.01-13, Pr.01-15, Pr.01-17 and Pr.01-19 (deceleration time) 2. Connect brake resistor, brake unit or DC bus on the drive. 3. Reduce the brake frequency. 4. Replace the drive with a larger capacity model. 5. Use S-curve acceleration/deceleration. 6. Use over-voltage stall prevention (Pr.06-01). 7. Use auto-acceleration and auto-deceleration (Pr.01-44). 8. Adjust braking condition (Pr.07-01 or the bolt position of the brake unit).
The setting for stall prevention condition is smaller than no-load current	The setting for stall prevention condition should be larger than no-load current
Power voltage is too high	Check if the input voltage is within the rated AC motor drive input voltage range and check for possible voltage spikes.
ON/OFF switch action of phase-in capacitor in the same power system	If the phase-in capacitor or active power supply unit acts in the same power system, the input voltage may surge abnormally in a short time. In this case, install an AC reactor.
Motor ground fault	The ground short circuit current charges the capacitor in the main circuit through the power. Check if there is ground fault on the motor cable, wiring box and its internal terminals. Troubleshoot the ground fault.
Incorrect wiring of brake resistor or brake unit	Check the wiring of brake resistor or brake unit.
Malfunction caused by interference	Verify the wiring of the control circuit and wiring/grounding of the main circuit to prevent interference.

ID	Display on LCD Keypad	Fault Name	Fault Descriptions
9	AUTO Fault ovn Ov at normal SPD	Over-voltage at constant speed (ovn)	DC bus over-voltage at constant speed. When ovn occurs, the drive closes the gate of the output immediately, the motor runs freely, and the display shows an ovn error.

Action and Reset	
Action Condition	820 V_{DC}
Action Time	Immediately act when DC bus voltage is higher than the condition
Fault Treatment Parameter	N/A
Reset Method	Manual reset
Reset Condition	Reset only when DC bus voltage is lower than 90% of over-voltage condition
Record	Yes
Cause	**Corrective Actions**
Impulsive change of the load	1. Connect brake resistor, brake unit or DC bus to the drive. 2. Reduce the load. 3. Replace to drive with a larger capacity model. 4. Adjust braking condition (Pr.07-01 or bolt position of the brake unit).
The setting for stall prevention condition is smaller than no-load current	The setting of stall prevention condition should be larger than no-load current
Regenerative voltage of motor inertia	Use over-voltage stall prevention function (Pr.06-01) Use a brake unit or DC bus
Power voltage is too high	Check if the input voltage is within the rated AC motor drive input voltage range and check for possible voltage spikes.
ON/OFF switch action of phase-in capacitor in the same power system	If the phase-in capacitor or active power supply unit acts in the same power system, the input voltage may surge abnormally in a short time. In this case, install an AC reactor.
Motor ground fault	The ground short-circuit current charges the capacitor in the main circuit through the power. Check if there is ground fault on the motor cable, wiring box and its internal terminals. Troubleshoot the ground fault.
Incorrect wiring of brake resistor or brake unit	Check the wiring of brake resistor or brake unit.
Malfunction caused by interference	Verify the wiring of the control circuit and wiring/grounding of the main circuit to prevent interference.

ID	Display on LCD Keypad	Fault Name	Fault Descriptions
10	AUTO Fault ovS Ov at stop	Over-voltage at stop (ovS)	Over-voltage at stop

Action and Reset	
Action Condition	820 V_{DC}
Action Time	Immediately act when DC bus voltage is higher than the condition
Fault Treatment Parameter	N/A
Reset Method	Manual reset
Reset Condition	Reset only when DC bus voltage is lower than 90% of over-voltage condition
Record	Yes
Cause	**Corrective Actions**
Power voltage is too high	Check if the input voltage is within the rated AC motor drive input voltage range and check for possible voltage spikes.
ON/OFF switch action of phase-in capacitor in the same power system	If the phase-in capacitor or active power supply unit activates in the same power system, the input voltage may surge abnormally in a short time. In this case, install an AC reactor.
Incorrect wiring of brake resistor or brake unit	Check the wiring of brake resistor or brake unit.
Malfunction caused by interference	Verify the wiring of the control circuit and wiring/grounding of the main circuit to prevent interference.
Hardware failure in voltage detection	Check if other error code such as cd1–cd3 occur after cycling the power. If yes, return to the factory for repair.
Motor ground fault	The ground short circuit current charges the capacitor in the main circuit through the power. Check if there is ground fault on the motor cable, wiring box and its internal terminals. Troubleshoot the ground fault.

ID	Display on LCD Keypad	Fault Name	Fault Descriptions
11	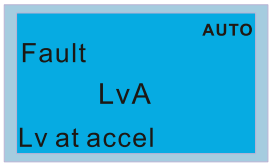	Low-voltage during acceleration (LvA)	DC bus voltage is lower than Pr.06-00 setting value during acceleration

Action and Reset	
Action Condition	Pr.06-00 (Default = depending on the model)
Action Time	Immediately act when DC bus voltage is lower than Pr.06-00
Fault Treatment Parameter	N/A
Reset Method	Manual reset
Reset Condition	Reset when DC bus voltage is higher than Pr.06-00 + 30V (Frame A~D) / 40V (Frame E and above)
Record	Yes
Cause	**Corrective Actions**
Power-off	Improve power supply condition.
Power voltage changes	Adjust voltage to the power range of the drive.
Start up the motor with large capacity	Check the power system. Increase the capacity of power equipment.
The load is too large	Reduce the load. Increase the drive capacity. Increase the acceleration time.
DC bus	Install DC reactor(s).
Check if there is short-circuit plate or any DC reactor installed between terminal +1 and +2	Connect short circuit plate or DC reactor between terminal +1 and +2. If the error still exists, return to the factory for repair.

ID	Display on LCD Keypad	Fault Name	Fault Descriptions
12	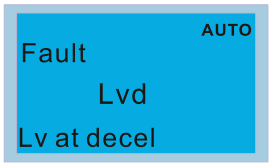	Low-voltage during deceleration (Lvd)	DC bus voltage is lower than Pr.06-00 setting value during deceleration

Action and Reset	
Action Condition	Pr.06-00 (Default = depending on the model)
Action Time	Immediately act when DC bus voltage is lower than Pr.06-00
Fault Treatment Parameter	NA
Reset Method	Manual reset
Reset Condition	Reset when DC bus voltage is higher than Pr.06-00 + 30V (Frame A–D) / 40V (Frame E and above)
Record	Yes
Cause	**Corrective Actions**
Power-off	Improve power supply condition.
Power voltage changes	Adjust voltage to the power range of the drive.
Start up the motor with large capacity	Check the power system. Increase the capacity of power equipment.
Sudden load	Reduce the load. Increase the drive capacity.
DC bus	Install DC reactor(s).

ID	Display on LCD Keypad	Fault Name	Fault Descriptions
13	AUTO Fault Lvn Lv at normal SPD	Low-voltage at constant speed (Lvn)	DC bus voltage is lower than Pr.06-00 setting value at constant speed

Action and Reset	
Action Condition	Pr.06-00 (Default = depending on the model)
Action Time	Immediately act when DC bus voltage is lower than Pr.06-00
Fault Treatment Parameter	NA
Reset Method	Manual reset
Reset Condition	Reset when DC bus voltage is higher than Pr.06-00 + 30 V (Frame A–D) / 40 V (Frame E and above)
Record	Yes
Cause	Corrective Actions
Power-off	Improve power supply condition.
Power voltage changes	Adjust voltage to the power range of the drive.
Start up the motor with large capacity	Check the power system. Increase the capacity of power equipment.
Sudden load	Reduce the load. Increase the drive capacity.
DC bus	Install DC reactor(s).

ID	Display on LCD Keypad	Fault Name	Fault Descriptions
14	AUTO Fault LvS Lv at stop	Low-voltage at stop (LvS)	1. DC bus voltage is lower than Pr.06-00 setting value at stop 2. Hardware failure in voltage detection

Action and Reset	
Action Condition	Pr.06-00 (Default = depending on the model)
Action Time	Immediately act when DC bus voltage is lower than Pr.06-00
Fault Treatment Parameter	N/A
Reset Method	Manual / auto: 230V models: Frame A–D = Lv level + 30 V_{DC} + 500 ms Frame E–G = Lv level + 40 V_{DC} + 500 ms Frame H = Lv level + 40 V_{DC} + 2200 ms 460V models: Frame A–D = Lv level + 60 V_{DC} + 500 ms Frame E–G = Lv level + 80 V_{DC} + 500 ms Frame H = Lv level + 80 V_{DC} + 2200 ms
Reset Condition	500 ms
Record	Yes
Cause	**Corrective Actions**
Power-off	Improve power supply condition.
Incorrect drive models	Check if the power specification matches the drive.
Power voltage changes	Adjust voltage to the power range of the drive. Cycle the power after checking the power. If LvS error still exists, return to the factory for repair.
Start up the motor with large capacity	Check the power system. Increase the capacity of power equipment.
DC bus	Install DC reactor(s).

ID	Display on LCD Keypad	Fault Name	Fault Descriptions
15	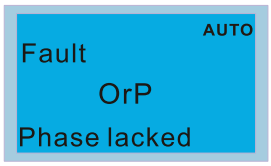	Phase loss protection (OrP)	Phase loss of power input

Action and Reset	
Action Condition	DC bus is lower than Pr.07-00, and DC bus ripple is higher than Pr.06-52
Action Time	N/A
Fault Treatment Parameter	Pr.06-53
Reset Method	Manual reset
Reset Condition	Immediately reset when DC bus is higher than Pr.07-00
Record	Yes
Cause	**Corrective Actions**
Phase loss of input power	Correctly install the wiring of the main circuit power.
Single phase power input to three-phase model	Choose the model whose power matches the voltage.
Power voltage changes	If the main circuit power works normally, verify the main circuit. Cycle the power after checking the power, if OrP error still exists, return to the factory for repair.
Loose wiring terminal of input power	Tighten the terminal screws according to the torque described in the user manual.
The input cable of three-phase power is cut off	Wire correctly. Replace the cut off cable.
Input power voltage changes too much	Verify the setting value for Pr.06-50 Time for Input Phase Loss Detection and Pr.06-52 Ripple of Input Phase Loss.
Unbalanced three-phase of input power	Check the power three-phase status.

ID	Display on LCD Keypad	Fault Name	Fault Descriptions
16	AUTO Fault oH1 IGBT over heat	IGBT overheating (oH1)	IGBT temperature exceeds the protection level
Action and Reset			
Action Condition		When Pr.06-15 is higher than the IGBT overheating protection level, oH1 error occurs instead of oH1 warning.	
Action Time		IGBT temperature exceeds the protection level for more than 1 second, oH1 error occurs.	
Fault Treatment Parameter		N/A	
Reset Method		Manual reset	
Reset Condition		Reset only when IGBT temperature is lower than oH1 error level minus (-) 10°C	
Record		Yes	
Cause		Corrective Actions	
Check if the ambient temperature or temperature inside the control cabinet is too high, or if there is obstruction in the ventilation hole of the control cabinet.		1. Check ambient temperature. 2. Regularly inspect the ventilation hole of the control cabinet. 3. Change the installed place if there are heating objects, such as braking resistors, in the surroundings. 4. Install / add cooling fan or air conditioner to lower the temperature inside the cabinet.	
Check if there is any obstruction on the heat sink or if the fan is running.		Remove the obstruction or replace the cooling fan.	
Insufficient ventilation space		Increase ventilation space of the drive.	
Check if the drive matches the corresponding load		1. Reduce the load 2. Reduce the carrier 3. Replace the drive with a larger capacity model.	
The drive has run 100% or more than 100% of the rated output for a long time		Replace the drive with a larger capacity model.	

ID	Display on LCD Keypad	Fault Name	Fault Descriptions
17	AUTO Fault oH2 Heat Sink oH	Heatsink overheating (oH2)	The drive has detected the heatsink are overheat

Action and Reset	
Action Condition	Refer to the table below for oH2 level of each models
Action Time	The oH2 fault occurs when the temperature sensor of heatsink detects the temperature is higher than the protection level for 100 ms.
Fault Treatment Parameter	N/A
Reset Method	Manual reset
Reset Condition	The drive auto-detects when the temperature sensor of heatsink detects the temperature is lower than oH2 error level minus (-) 10°C
Record	Yes
Cause	Corrective Actions
Check if the ambient temperature or temperature inside the control cabinet is too high, or if there is obstruction in the ventilation hole of the control cabinet.	1. Check ambient temperature. 2. Regularly inspect the ventilation hole of the control cabinet. 3. Change the installed place if there are heating objects, such as braking resistors, in the surroundings. 4. Install / add cooling fan or air conditioner to lower the temperature inside the cabinet.
Check if there is any obstruction on the heat sink or if the fan is running.	Remove the obstruction or replace the cooling fan.
Insufficient ventilation space	Increase ventilation space of the drive.
Check if the drive matches the corresponding load	1. Reduce the load. 2. Reduce the carrier. 3. Replace the drive with a larger capacity model.
The drive has run 100% or more than 100% of the rated output for a long time	Replace the drive with a larger capacity model.
Unstable power	Install reactor(s).
Load changes frequently	Reduce load changes.

oH1 / oH2 warning level

Model	oH1	oH2	oH warning oH1 warning = (Pr.06-15)
VFD007CH23A-21	110	95	oH1 Warning = oH1 – 5 oH2 Warning = oH2 – 5
VFD015CH23A-21		95	
VFD022CH23A-21		95	
VFD037CH23A-21		100	
VFD055CH23A-21		80	
VFD075CH23A-21		80	
VFD110CH23A-21		80	
VFD150CH23A-21		75	
VFD185CH23A-21		75	
VFD220CH23A-00/-21		65	
VFD300CH23A-00/-21		65	

Model	oH1	oH2	oH warning oH1 warning = (Pr.06-15)
VFD370CH23A-00/-21	110	65	oH1 Warning = oH1 – 5 oH2 Warning = oH2 – 5
VFD450CP23A-00/-21		65	
VFD550CH23A-00/-21		65	
VFD750CH23A-00/-21		65	
VFD007CH43A/4EA-21	110	95	oH1 Warning = oH1 – 5 oH2 Warning = oH2 – 5
VFD015CH43A/4EA-21		95	
VFD022CH43A/4EA-21		100	
VFD037CH43A/4EA-21		105	
VFD055CH43A/4EA-21		100	
VFD075CH43A/4EA-21		80	
VFD110CH43A/4EA-21		80	
VFD150CH43A/4EA-21		80	
VFD185CH43A/4EA-21		85	
VFD220CH43A/4EA-21		85	
VFD300CH43A/4EA-21		85	
VFD370CH43S-00/-21		65	
VFD370CH43L-00		70	
VFD450CH43A-00/-21		65	
VFD450CH43L-00		65	
VFD550CH43A-00/-21		65	
VFD550CH43L-00		65	
VFD750CH43A-00/-21		65	
VFD750CH43L-00		65	
VFD900CH43A-00/-21		65	
VFD1100CH43A-00/-21		65	
VFD1320CH43A-00/-21		65	
VFD1600CH43A-00/-21		70	
VFD1850CH43A-00/-21		70	
VFD2200CH43A-00/-21		70	
VFD2800CH43A-00 VFD2800CH43C-21		70	
VFD3150CH43A-00 VFD3150CH43C-21		70	
VFD3550CH43A-00 VFD3550CH43C-21		70	
VFD4500CH43A-00 VFD4500CH43C-21		70	

ID	Display on LCD Keypad	Fault Name	Fault Descriptions
18	AUTO Fault tH1o Thermo 1 open	IGBT temperature detection failure (tH1o)	IGBT hardware failure in temperature detection
Action and Reset			
Action Condition		NTC broken or wiring failure	
Action Time		When the IGBT temperature is higher than the protection condition, and detection time exceeds 100 ms, the tH1o protection activates.	
Fault Treatment Parameter		N/A	
Reset Method		Manual reset	
Reset Condition		Immediately reset	
Record		Yes	
Cause		Corrective Actions	
Hardware failure		Wait for 10 minutes, and then cycle the power. Check if tH1o protection still exists. If yes, return to the factory for repair.	

ID	Display on LCD Keypad	Fault Name	Fault Descriptions
19	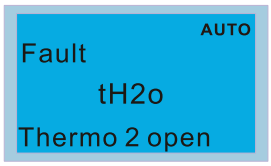	Capacitor hardware error (tH2o)	Hardware failure in capacitor temperature detection

Action and Reset	
Action Condition	NTC broken or wiring failure
Action Time	When the IGBT temperature is higher than the protection condition, and detection time exceeds 100 ms, the tH2o protection activates.
Fault Treatment Parameter	N/A
Reset Method	Manual reset
Reset Condition	Immediately reset
Record	Yes
Cause	Corrective Actions
Hardware failure	Wait for 10 minutes, and then cycle the power. Check if tH2o protection still exists. If yes, return to the factory for repair.

ID	Display on LCD Keypad	Fault Name	Fault Descriptions
21	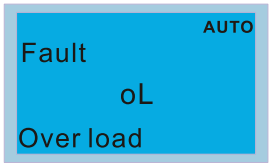	Over load (oL)	The AC motor drive detects excessive drive output current. The overload capacity sustains for 1 minute when the drive outputs 150% of the drive's rated output current.

Action and Reset	
Action Condition	Based on over load curve and derating curve.
Action Time	When the load is higher than the protection level and exceeds allowable time, the oL protection activates.
Fault Treatment Parameter	N/A
Reset Method	Manual reset
Reset Condition	Reset in 5 sec. after the fault is cleared
Record	Yes

Cause	Corrective Actions
The load is too large	Reduce the load.
Accel./Decel. time or the working cycle are too short	Increase the setting value for Pr.01-12–01-19 (accel./decel time).
V/F voltage is too high	Adjust the settings for Pr.01-01–01-08 (V/F curve), especially the setting value for the mid-point voltage (if the mid-point voltage is set too low, the load capacity decreases at low speed). Refer to the V/F curve selection of Pr.01-43.
The capacity of the drive is too small	Replace the drive with a larger capacity model.
Overload during low-speed operation	Reduce the load during low-speed operation. Increase the drive capacity. Decrease the carrier frequency of Pr.00-17.
Torque compensation is too large	Adjust the torque compensation (refer to Pr.07-26 Torque Compensation Gain) until the output current reduces and the motor does not stall.
Check if the setting for stall prevention is correct.	Set the stall prevention to the proper value.
Output phase loss	Check the status of three-phase motor. Check if the cable is broken or the screws are loose.
Improper parameter settings for the speed tracking function (including restart after momentary power loss and restart after fault)	Correct the parameter settings for speed tracking. 1. Start the speed tracking function. 2. Adjust the maximum current for Pr.07-09 speed tracking.

ID	Display on LCD Keypad	Fault Name	Fault Descriptions
22	AUTO Fault EoL1 Thermal relay 1	Electronic thermal relay 1 protection (EoL1)	Electronic thermal relay 1 protection. The drive coasts to stop once it activates.

Action and Reset	
Action Condition	Start counting when output current > 105% of motor 1 rated current
Action Time	Pr.06-14 (if the output current is larger than 105% of motor 1 rated current again within 60 sec., the counting time reduces and is less than Pr.06-14)
Fault Treatment Parameter	N/A
Reset Method	Manual reset
Reset Condition	Reset in 5 sec. after the fault is cleared
Record	Yes

Cause	Corrective Actions
The load is too large	Reduce the load.
Accel./Decel. time or the working cycle is too short	Increase the setting values for Pr.01-12–01-19 (Accel./Decel time).
V/F voltage is too high	Adjust the settings for Pr.01-01–01-08 (V/F curve), especially the setting value for the mid-point voltage (if the mid-point voltage is set too low, the load capacity decreases at low speed). Refer to the V/F curve selection of Pr.01-43.
Overload during low-speed operation. When using a general motor, even it operates below rated current, an overload may still occur during low-speed operation.	Decrease low-speed operation time. Replace the drive with a dedicated to VFD model. Increase the motor capacity.
When using motor drive dedicated motors, Pr.06-13 = 0 (electronic thermal relay selection motor 1 = inverter motor)	Pr.06-13 = 1 electronic thermal relay selection motor 1 = standard motor (motor with fan on the shaft).
Incorrect value of electronic thermal relay	Reset to the correct motor rated current.
The maximum motor frequency is set too low	Reset to the correct motor rated frequency.
One drive to multiple motors	Set Pr.06-13 = 2 electronic thermal relay selection motor 1= disable, and install thermal relay on each motor.
Check if the setting for stall prevention is correct.	Set the stall prevention to the proper value.
Torque compensation is too large	Adjust the torque compensation (refer to Pr.07-26 torque compensation gain) until the current reduces and the motor does no stall.
Motor fan error	Check the status of the fan, or replace the fan.
Unbalanced three-phase impedance of the motor	Replace the motor.

ID	Display on LCD Keypad	Fault Name	Fault Descriptions
23	AUTO Fault EoL2 Thermal relay 2	Electronic thermal relay 2 protection (EoL2)	Electronic thermal relay 2 protection. The drive coasts to stop once it activates.

Action and Reset	
Action Condition	Start counting when output current > 105% of motor 2 rated current
Action Time	Pr.06-28 (If the output current is larger than 105% of motor 2 rated current again within 60 sec., the counting time reduces and is less than Pr.06-28)
Fault Treatment Parameter	N/A
Reset Method	Manual reset
Reset Condition	Reset in 5 sec. after the fault is cleared
Record	Yes

Cause	Corrective Actions
The load is too large	Reduce the load.
Accel./Decel. time or the working cycle are too short	Increase the setting values for Pr.01-12–01-19 (accel./decel. time).
V/F voltage is too high	Adjust the settings for Pr.01-01–01-08 (V/F curve), especially the setting value for the mid-point voltage (if the mid-point voltage is set too low, the load capacity decreases at low speed). Refer to the V/F curve selection setting of Pr.01-43.
Overload during low-speed operation. When using general motor, even it operates below rated current, an overload may still occur during low-speed operation.	Decrease low-speed operation time. Replace the drive with a dedicated to VFD model. Increase the motor capacity.
When using motor drive dedicated motors, Pr.06-27 = 0 (electronic thermal relay selection motor 2 = 0 inverter motor)	Pr.06-27 = 1 Electronic thermal relay selection motor 2 = standard motor (motor with fan on the shaft).
Incorrect value of electronic thermal relay	Reset to the correct motor rated current.
The maximum motor frequency is set too low	Reset to the correct motor rated frequency.
One drive to multiple motors	Set Pr.06-27 = 2 Electronic thermal relay selection motor 2 = disable, and install thermal relay on each motor.
Check if the setting for stall prevention is correct.	Set the stall prevention to the proper value.
Torque compensation is too large	Adjust the torque compensation (refer to Pr.07-26 torque compensation gain) until the current reduces and the motor does no stall.
Motor fan error	Check the status of the fan, or replace the fan.
Unbalanced three-phase impedance of the motor	Replace the motor.

ID	Display on LCD Keypad	Fault Name	Fault Descriptions
24_1	AUTO Fault oH3 Motor over heat	Motor overheating (oH3) PTC	Motor overheating (PTC) (Pr.03-00–Pr.03-02 = 6 PTC), when PTC input > Pr.06-30, the fault treatment acts according to Pr.06-29.

Action and Reset	
Action Condition	PTC input value > Pr.06-30 setting (Default = 50%)
Action Time	Immediately act
Fault Treatment Parameter	Pr.06-29 0: Warn and keep operation 1: Fault and ramp to stop 2: Fault and coast to stop 3: No warning
Reset Method	When Pr.06-29 = 0, oH3 is a “Warning”. The “Warning” is automatically cleared. When Pr.06-29 = 1 or 2, oH3 is a “Fault”. You must reset manually.
Reset Condition	Immediately reset
Record	When Pr.06-29 = 1 or 2, oH3 is a “Fault”, and the fault is recorded.

Cause	Corrective Actions
Motor shaft lock	Remove the shaft lock.
The load is too large	Reduce the load. Increase the motor capacity.
Ambient temperature is too high	Change the installed place if there are heating devices in the surroundings. Install/ add cooling fan or air conditioner to lower the ambient temperature.
Motor cooling system error	Check the cooling system to make it work normally.
Motor fan error	Replace the fan.
Operate at low-speed too long.	Decrease low-speed operation time. Replace the motor with a dedicated to VFD model. Increase the motor capacity.
Accel./Decel. time and working cycle are too short	Increase the setting values for Pr.01-12–01-19 (accel./decel. time).
V/F voltage is too high	Adjust settings for Pr.01-01–01-08 (V/F curve), especially the setting value for the mid-point voltage (if the mid-point voltage is set too low, the load capacity decreases at low speed).
Check if the motor rated current matches that on the motor nameplate.	Reset to the correct motor rated current.
Check if the PTC is properly set and wired.	Check the connection between PTC thermistor and the heat protection.
Check if the setting for stall prevention is correct.	Set the stall prevention to the proper value.
Unbalanced three-phase impedance of the motor	Replace the motor.
Harmonics are too high.	Use remedies to reduce harmonics.

ID	Display on LCD Keypad	Fault Name	Fault Descriptions
24_2	AUTO Fault oH3 Motor over heat	Motor overheating (oH3) PT100	Motor overheating (PT100) (Pr.03-00–Pr.03-02 = 11 PT100). When PT100 input > Pr.06-57 (default = 7 V), the fault treatment acts according to Pr.06-29.

Action and Reset	
Action Condition	PT100 input value > Pr.06-57 setting (default = 7 V)
Action Time	Immediately act
Fault Treatment Parameter	Pr.06-29 0: Warn and keep operation 1: Fault and ramp to stop 2: Fault and coast to stop 3: No warning
Reset Method	When Pr.06-29 = 0 and the temperature < Pr.06-56, oH3 is automatically cleared. When Pr.06-29 = 1 or 2, oH3 is a “Fault”. You must reset manually.
Reset Condition	Immediately reset
Record	When Pr.06-29 = 1 or 2, oH3 is a “Fault”, and the fault is recorded.

Cause	Corrective Actions
Motor shaft lock	Remove the shaft lock.
The load is too large	Reduce the load. Increase the motor capacity.
Ambient temperature is too high	Change the installed place If there are heating devices in the surroundings. Install/ add cooling fan or air conditioner to lower the ambient temperature.
Motor cooling system error	Check the cooling system to make it work normally.
Motor fan error	Replace the fan.
Operate at low-speed too long	Decrease low-speed operation time. Replace the motor with a dedicated to VFD model. Increase the motor capacity.
Accel./Decel. time and working cycle are too short	Increase the setting values for Pr.01-12–Pr.01-19 (accel./decel. time).
V/F voltage is too high	Adjust settings for Pr.01-01–01-08 (V/F curve), especially the setting value for the mid-point voltage (if the mid-point voltage is set too low, the load capacity decreases at low speed).
Check if the motor rated current matches that on the motor nameplate.	Reset to the correct motor rated current.
Check if the PT100 is properly set and wired.	Check connection of PT100 thermistor.
Check if the setting for stall prevention is correct.	Set the stall prevention to the proper value.
Unbalanced three-phase impedance of the motor	Replace the motor.
Harmonics are too high	Use remedies to reduce harmonics.

ID	Display on LCD Keypad	Fault Name	Fault Descriptions
25	AUTO Fault INTR Interrupt Error	Interrupt error (INTR)	MCU overload and causing the control circuit interruption error
Action and Reset			
Action Condition		N/A	
Action Time		Immediately acts	
Fault Treatment Parameter		N/A	
Reset Method		Manual reset	
Reset Condition		N/A	
Record		Yes	
Cause		Corrective Actions	
PWM carrier is set too high to calculate the control calculation		Decrease the carrier setting.	

ID	Display on LCD Keypad	Fault Name	Fault Descriptions
26	AUTO Fault ot1 Over torque 1	Over torque 1 (ot1)	When output current exceeds the over-torque detection level (Pr.06-07) and exceeds over-torque detection time (Pr.06-08), and when Pr.06-06 or Pr.06-09 is set to 2 or 4, the ot1 error displays.

Action and Reset		
Action Condition	Pr.06-07	
Action Time	Pr.06-08	
Fault Treatment Parameter	Pr.06-06 0: No function 1: Continue operation after Over-torque detection during constant speed operation 2: Stop after Over-torque detection during constant speed operation 3: Continue operation after Over-torque detection during RUN 4: Stop after Over-torque detection during RUN	
Reset Method	Auto	When Pr.06-06 = 1 or 3, ot1 is a “Warning”. The warning is automatically cleared when the output current < (Pr.06-07 – 5%)
	Manual	When Pr.06-06 = 2 or 4, ot1 is a “Fault”. You must reset manually.
Reset Condition	Immediately reset	
Record	When Pr.06-06 = 2 or 4, ot1 is a “Fault”, and the fault is recorded.	

Cause	Corrective Actions
Incorrect parameter setting	Reset Pr.06-07 and Pr.06-08.
Mechanical failure (e.g. over-torque, mechanical lock)	Remove the causes of malfunction.
The load is too large	Reduce the load. Replace the motor with a larger capacity model.
Accel./Decel. time and working cycle are too short	Increase the setting values for Pr.01-12–Pr.01-19 (accel./decel. time).
V/F voltage is too high	Adjust settings for Pr.01-01–01-08 (V/F curve), especially the setting value for the mid-point voltage (if the mid-point voltage is set too low, the load capacity decreases at low speed).
The motor capacity is too small	Replace the motor with a larger capacity model.
Overload during low-speed operation	Decrease low-speed operation time. Increase the motor capacity.
Torque compensation is too large	Adjust the torque compensation (refer to Pr.07-26 torque compensation gain) until the current reduces and the motor does no stall.
Improper parameter settings for speed tracking function (including restart after momentary power loss and restart after fault)	Correct the parameter settings for speed tracking. 1. Start the speed tracking function. 2. Adjust the maximum current for Pr.07-09 speed tracking.

ID	Display on LCD Keypad	Fault Name	Fault Descriptions
27	AUTO Fault ot2 Over torque 2	Over torque 2 (ot2)	When output current exceeds the over-torque detection level (Pr.06-10) and exceeds over-torque detection time (Pr.06-11), and when Pr.06-09 is set to 2 or 4, the ot2 error displays.

Action and Reset		
Action Condition	Pr.06-10	
Action Time	Pr.06-11	
Fault Treatment Parameter	Pr.06-09 0: No function 1: Continue operation after Over-torque detection during constant speed operation 2: Stop after Over-torque detection during constant speed operation 3: Continue operation after Over-torque detection during RUN 4: Stop after Over-torque detection during RUN	
Reset Method	Auto	When Pr.06-09 = 1 or 3, ot2 is a “Warning”. The warning is automatically cleared when the output current < (Pr.06-10 – 5%).
	Manual	When Pr.06-09 = 2 or 4, ot2 is a “Fault”. You must reset manually.
Reset Condition	Immediately reset	
Record	When Pr.06-09 = 2 or 4, ot2 is a “Fault”, and the fault is recorded.	

Cause	Corrective Actions
Incorrect parameter setting	Reset Pr.06-07 and Pr.06-08.
Mechanical failure (e.g. over-torque, mechanical lock)	Remove the causes of malfunction.
The load is too large.	Reduce the load. Replace the motor with a larger capacity model.
Accel./Decel. time and working cycle are too short	Increase the setting values for Pr.01-12–01-19 (accel./decel. time).
V/F voltage is too high	Adjust the settings for Pr.01-01–01-08 (V/F curve), especially the setting value for the mid-point voltage (if the mid-point voltage is set too low, the load capacity decreases at low speed).
The motor capacity is too small	Replace the motor with a larger capacity model.
Overload during low-speed operation	Decrease low-speed operation time. Increase the motor capacity.
Torque compensation is too large	Adjust the torque compensation (refer to Pr.07-26 torque compensation gain) until the current reduces and the motor does no stall.
Improper parameter settings for speed tracking function (including restart at momentary power loss and restart after fault)	Correct the parameter settings for speed tracking. 1. Start the speed tracking function. 2. Adjust the maximum current for Pr.07-09 speed tracking.

ID	Display on LCD Keypad	Fault Name	Fault Descriptions
28	AUTO Fault uC Under current	Under current (uC)	Low current detection

Action and Reset		
Action Condition	Pr.06-71	
Action Time	Pr.06-72	
Fault Treatment Parameter	Pr.06-73 0: No function 1: Fault and coast to stop 2: Fault and ramp to stop by second deceleration time 3: Warn and operation continue	
Reset Method	Auto	When Pr.06-73 = 3, uC is a “Warning”. The warning is automatically cleared when the output current > (Pr.06-71+0.1 A).
	Manual	When Pr.06-73 = 1 or 2, uC is a “Fault”. You must reset manually.
Reset Condition	Immediately reset	
Record	When Pr.06-71 = 1 or 2, uC is a “Fault”, and the fault is recorded.	

Cause	Corrective Actions
Motor cable disconnection	Troubleshoot the connection between the motor and the load.
Improper setting of low-current protection	Reset Pr.06-71, Pr.06-72 and Pr.06-73 to proper settings.
The load is too low	Check the load status. Check if the motor capacity matches the load.

ID	Display on LCD Keypad	Fault Name	Fault Descriptions
29	AUTO Fault LiT Limit Error	Limit Error (LiT)	This code occurs when the motor drive is running under speed mode (not IMFOCPG / PMFOCPG), and the negative running limit or the positive running limit of the MI terminals is enabled.

Action and Reset	
Action Condition	When under the speed mode (not FOCPG), negative running limit or positive running limit is enabled.
Action Time	Immediately act
Fault Treatment Parameter	N/A
Reset Method	Move the motor away from the limit position, press the STOP / RESET button on the keypad (manual reset).
Reset Condition	Immediately reset
Record	Yes
Cause	**Corrective Actions**
The limit ON / OFF switch may be on the wrong position	Install the limit ON/OFF switch to correct position.
MI terminal may not be working properly.	Set Pr.00-04 = 16 to verify if the MI terminals work properly. 16: The digital input status (ON / OFF) (i)
Deceleration time may be too long, causing the motor cannot stop at limit position	Reduce deceleration time. Adjust setting value of DC brake current level (Pr.07-01 or the insert position on the brake unit).

ID	Display on LCD Keypad	Fault Name	Fault Descriptions
30	AUTO Fault cF1 EEPROM write err	EEPROM write error (cF1)	Internal EEPROM cannot be programmed
Action and Reset			
Action Condition		Firmware internal detection	
Action Time		cF1 acts immediately when the drive detects the fault	
Fault Treatment Parameter		N/A	
Reset Method		Manual reset	
Reset Condition		Immediately reset	
Record		Yes	
Cause		Corrective Actions	
Internal EEPROM cannot be programmed		Press RESET key or reset the parameter to the default setting, if cF1 still exists, return to the factory for repair. Cycle the power, if cF1 still exists, return to the factory for repair.	

ID	Display on LCD Keypad	Fault Name	Fault Descriptions
31	AUTO Fault cF2 EEPROM read err	EEPROM read error (cF2)	Internal EEPROM cannot be read
Action and Reset			
Action Condition		Firmware internal detection	
Action Time		cF2 acts immediately when the drive detects the fault	
Fault Treatment Parameter		N/A	
Reset Method		Manual reset	
Reset Condition		Immediately reset	
Record		Yes	
Cause		Corrective Actions	
Internal EEPROM cannot be read		Press RESET key or reset the parameter to the default setting, if cF2 still exists, return to the factory for repair. Cycle the power, if cF2 error still exists, return to the factory for repair.	

ID	Display on LCD Keypad	Fault Name	Fault Descriptions
33	AUTO Fault cd1 Ias sensor err	U-phase error (cd1)	U-phase current detection error when power is ON
Action and Reset			
Action Condition		Hardware detection	
Action Time		cd1 acts immediately when the drive detects the fault	
Fault Treatment Parameter		N/A	
Reset Method		Power-off	
Reset Condition		N/A	
Record		Yes	
Cause		Corrective Actions	
Hardware failure		Cycle the power. If cd1 still exists, return to the factory for repair.	

ID	Display on LCD Keypad	Fault Name	Fault Descriptions
34	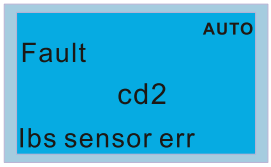	V-phase error (cd2)	V-phase current detection error when power ON

Action and Reset	
Action Condition	Hardware detection
Action Time	cd2 acts immediately when the drive detects the fault
Fault Treatment Parameter	N/A
Reset Method	Power-off
Reset Condition	N/A
Record	Yes
Cause	Corrective Actions
Hardware failure	Cycle the power. If cd2 still exists, return to the factory for repair.

ID	Display on LCD Keypad	Fault Name	Fault Descriptions
35	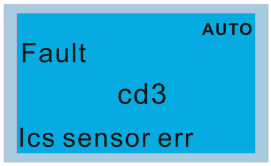	W-phase error (cd3)	W-phase current detection error when power ON

Action and Reset	
Action Condition	Hardware detection
Action Time	cd3 acts immediately when the drive detects the fault
Fault Treatment Parameter	N/A
Reset Method	Power-off
Reset Condition	N/A
Record	Yes
Cause	**Corrective Actions**
Hardware failure	Cycle the power. If cd3 still exists, return to the factory for repair.

ID	Display on LCD Keypad	Fault Name	Fault Descriptions
36	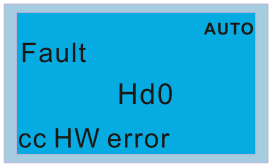	cc hardware failure (Hd0)	cc (current clamp) hardware protection error when power is ON

Action and Reset	
Action Condition	Hardware detection
Action Time	Hd0 acts immediately when the drive detects the fault
Fault Treatment Parameter	N/A
Reset Method	Power-off
Reset Condition	N/A
Record	Yes
Cause	Corrective Actions
Hardware failure	Cycle the power. If Hd0 still exists, return to the factory for repair.

ID	Display on LCD Keypad	Fault Name	Fault Descriptions
37	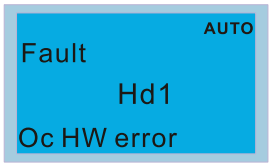	oc hardware error (Hd1)	oc hardware protection error when power is ON
Action and Reset			
Action Condition	Hardware detection		
Action Time	Hd1 acts immediately when the drive detects the fault		
Fault Treatment Parameter	N/A		
Reset Method	Power-off		
Reset Condition	N/A		
Record	Yes		
Cause	Corrective Actions		
Hardware failure	Cycle the power. If Hd1 still exists, return to the factory for repair.		

ID	Display on LCD Keypad	Fault Name	Fault Descriptions
38	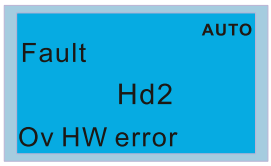	ov hardware error (Hd2)	ov hardware protection error when power is ON

Action and Reset	
Action Condition	Hardware detection
Action Time	Hd2 acts immediately when the drive detects the fault
Fault Treatment Parameter	N/A
Reset Method	Power-off
Reset Condition	N/A
Record	Yes
Cause	**Corrective Actions**
Hardware failure	Cycle the power. If Hd2 still exists, return to the factory for repair.

ID	Display on LCD Keypad	Fault Name	Fault Descriptions
39	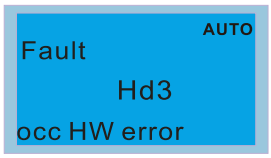	occ hardware error (Hd3)	Protection error of occ IGBT short-circuit detection when power is ON
Action and Reset			
Action Condition	Hardware detection		
Action Time	Hd3 acts immediately when the drive detects the fault		
Fault Treatment Parameter	N/A		
Reset Method	Power-off		
Reset Condition	N/A		
Record	Yes		
Cause	Corrective Actions		
Hardware failure	Cycle the power. If Hd3 still exists, return to the factory for repair.		

ID	Display on LCD Keypad	Fault Name	Fault Descriptions
40	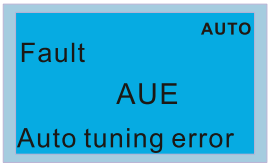	Auto-tuning error (AUE)	Motor auto-tuning error

Action and Reset	
Action Condition	Hardware detection
Action Time	Immediately act
Fault Treatment Parameter	N/A
Reset Method	Manual reset
Reset Condition	Immediately reset
Record	Yes
Cause	Corrective Actions
Press “STOP” key during auto-tuning	Re-execute auto-tuning.
Incorrect motor capacity (too large or too small) and parameter setting	Check motor capacity and related parameters. Set the correct parameters, that is Pr.01-01–Pr.01-02. Set Pr.01-00 larger than motor rated frequency.
Incorrect motor wiring	Check the wiring.
Motor shaft lock	Remove the cause of motor shaft lock.
The electromagnetic contactor is ON at output side (U/V/W) of the drive	Make sure the electromagnetic valve is OFF.
The load is too large.	Reduce the load. Replace the motor with a larger capacity model.
Accel./Decel. time is too short	Increase the setting values for Pr.01-12–Pr.01-19 (Accel./Decel. time).

ID	Display on LCD Keypad	Fault Name	Fault Descriptions
41	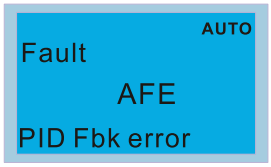	PID loss ACI (AFE)	PID feedback loss (analog feedback signal is only valid when the PID function is enabled)

Action and Reset		
Action Condition	When the analog input < 4 mA (only detects 4–20 mA analog input)	
Action Time	Pr.08-08	
Fault Treatment Parameter	Pr.08-09 0: Warn and keep operation 1: Fault and ramp to stop 2: Fault and coast to stop 3: Warn and operate at last frequency	
Reset Method	Auto	When Pr.08-09 = 3 or 4, AFE is a “Warning”. When the feedback signal is > 4 mA, the”Warning” is automatically cleared.
	Manual	When Pr.08-09 = 1 or 2, AFE is a “Fault”. You must reset manually.
Reset Condition	Immediately reset	
Record	When Pr.08-09 = 1 or 2, AFE is a “Fault”, and the fault is recorded; when Pr.08-09 = 3 or 4, AFE is a “Warning”, and the warning is not recorded.	
Cause	Corrective Actions	
PID feedback cable is loose or cut off	Tighten the terminal. Replace the cable with a new one.	
Feedback device failure	Replace the device with a new one.	
Hardware failure	Check all the wiring. If AFE fault still exists, return to the factory for repair.	

ID	Display on LCD Keypad	Fault Name	Fault Descriptions
42	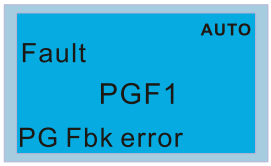	PG feedback error (PGF1)	The motor runs in a reverse direction to the frequency command direction.

Action and Reset	
Action Condition	Software detection
Action Time	Pr.10-09
Fault Treatment Parameter	Pr.10-08 0: Warn and keep operation 1: Fault and ramp to stop 2: Fault and coast to stop
Reset Method	Manual reset
Reset Condition	Immediately reset
Record	Yes
Cause	**Corrective Actions**
Incorrect parameter setting of encoder	Reset encoder parameter (Pr.10-02).
Check wiring of the encoder	Re-wire the encoder.
PG card or PG encoder failure	Replace PG card or encoder with a new one.
Malfunction caused by interference	Verify wiring of the control circuit and wiring / grounding of the main circuit to prevent interference.

ID	Display on LCD Keypad	Fault Name	Fault Descriptions
43		PG feedback loss (PGF2)	Pr.10-00 and Pr.10-02 is not set in the PG control mode. When press “RUN” key, PGF2 fault occurs.

Action and Reset	
Action Condition	Software detection
Action Time	Immediately act
Fault Treatment Parameter	N/A
Reset Method	Manual reset
Reset Condition	Immediately reset
Record	Yes
Cause	Corrective Actions
Incorrect setting of encoder parameter	Reset encoder parameters (Pr.10-00 and Pr.10-02).
Incorrect selection of the control mode	Choose the correct control mode.

ID	Display on LCD Keypad	Fault Name	Fault Descriptions
44	AUTO Fault PGF3 PG Fbk over SPD	PG feedback stall (PGF3)	Under PG mode, when the motor frequency exceeds the encoder observer stall level (Pr.10-10) and starts to count, the fault time is longer than the detection time of encoder observer stall (Pr.10-11), and then PGF3 fault occurs.

Action and Reset	
Action Condition	Pr.10-10
Action Time	Pr.10-11
Fault Treatment Parameter	Pr.10-12 0: Warn and keep operation 1: Fault and ramp to stop 2: Fault and coast to stop
Reset Method	Manual reset
Reset Condition	Immediately reset
Record	Yes
Cause	Corrective Actions
Incorrect setting of encoder parameter	Reset encoder parameter (Pr.10-01).
Pr.01-00 is set too small	Set proper value for Pr.01-00.
Incorrect setting for ASR parameters and accel./decel. time	Reset ASR parameters. Set correct accel./decel. time.
Incorrect setting for PG feedback stall	Reset proper values for Pr.10-10 and Pr.10-11

ID	Display on LCD Keypad	Fault Name	Fault Descriptions
45	AUTO Fault PGF4 PG Fbk deviate	PG slip error (PGF4)	Under PG mode, when the motor frequency exceeds encoder observer slip range (Pr.10-13) and starts to count, the fault time is longer than the detection time of encoder observer slip (Pr.10-14), PGF4 fault occurs.

Action and Reset		
Action Condition	Pr.10-13	
Action Time	Pr.10-14	
Fault Treatment Parameter	Pr.10-15 0: Warn and keep operation 1: Fault and ramp to stop 2: Fault and coast to stop	
Reset Method	Auto	When Pr.10-15 = 0, PGF4 is a “Warning”, when the deviation between output frequency and motor frequency is smaller than the encoder observer slip range, the warning is automatically cleared.
	Manual	When Pr.10-15 = 1 or 2, PGF4 is a “Fault”. You must reset manually.
Reset Condition	Immediately reset	
Record	When Pr.10-15 = 1 or 2, PGF4 is a “Fault”, and the fault is recorded.	

Cause	Corrective Actions
Incorrect settings for PG feedback parameters	Reset correct values for Pr.10-13 and Pr.10-14.
Incorrect settings for ASR parameters and accel./decel. time	Reset ASR parameters. Set correct accel./decel time.
Incorrect settings of encoder parameters	Reset encoder parameters (Pr.10-01).
Accel./Decel. time is too short	Reset proper accel./decel. time.
Incorrect settings of torque limit parameters (Pr.06-12, Pr.11-17–20)	Reset proper setting values for Pr.06-12 and Pr.11-17–Pr.17-20.
Motor shaft lock	Remove causes of motor shaft lock.
Mechanical brake is not released	Check the action sequence of the system.

ID	Display on LCD Keypad	Fault Name	Fault Descriptions
48	AUTO Fault ACE ACI loss	ACI loss (ACE)	Analog input loss (including all the 4–20 mA analog signal)

Action and Reset		
Action Condition	When the analog input is < 4 mA (only detects 4–20 mA analog input)	
Action Time	Immediately act	
Fault Treatment Parameter	Pr.03-19 0: Disable 1: Continue operation at the last frequency (warning, ANL is displayed on the keypad) 2: Decelerate to stop (warning, ANL is displayed on the keypad) 3: Stop immediately and display ACE	
Reset Method	Auto	When Pr.03-19 = 1 or 2, ACE is a “Warning”. When analog input signal is > 4 mA, the warning is automatically cleared.
	Manual	When Pr.03-19 = 3, ACE is a “Fault”. You must reset manually.
Reset Condition	Immediately reset	
Record	When Pr.03-19 = 3, ACE is a “Fault”, and the fault is recorded.	
Cause	Corrective Actions	
ACI cable is loose or cut off	Tighten the terminal. Replace the cable with a new one.	
External device failure	Replace the device with a new one.	
Hardware failure	Check all the wiring. If ACE still exists, return to the factory for repair.	

ID	Display on LCD Keypad	Fault Name	Fault Descriptions
49	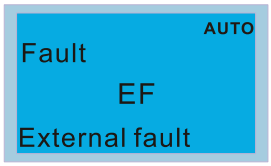	External fault (EF)	External fault. When the drive decelerates based on the setting of Pr.07-20, the EF fault displays on the keypad.

Action and Reset	
Action Condition	MIx = EF and the MI terminal is ON
Action Time	Immediately act
Fault Treatment Parameter	Pr.07-20 0: Coast to stop 1: Stop by the first deceleration time 2: Stop by the second deceleration time 3: Stop by the third deceleration time 4: Stop by the fourth deceleration time 5: System deceleration 6: Automatic deceleration (Pr.01-46)
Reset Method	Manual reset
Reset Condition	Manual reset only after the external fault is cleared (terminal status is recovered)
Record	Yes
Cause	Corrective Actions
External fault	Press RESET key after the fault is cleared.

ID	Display on LCD Keypad	Fault Name	Fault Descriptions
50	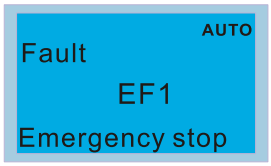	Emergency stop (EF1)	When the contact of MIx = EF1 is ON, the output stops immediately and displays EF1 on the keypad. The motor is in free running.
Action and Reset			
Action Condition		MIx = EF1 and the MI terminal is ON	
Action Time		Immediately act	
Fault Treatment Parameter		N/A	
Reset Method		Manual reset	
Reset Condition		Manual reset only after the external fault is cleared (terminal status is recovered)	
Record		Yes	
Cause		Corrective Actions	
When MIx = EF1 activates		Verify if the system is back to normal condition, and then press RESET key to go back to the default.	

ID	Display on LCD Keypad	Fault Name	Fault Descriptions
51	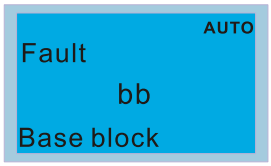	External base block (bb)	When the contact of MIx = bb is ON, the output stops immediately and displays bb on the keypad. The motor is in free running.

Action and Reset	
Action Condition	MIx = bb and the MI terminal is ON
Action Time	Immediately act
Fault Treatment Parameter	N/A
Reset Method	The display “bb” is automatically cleared after the fault is cleared.
Reset Condition	N/A
Record	No
Cause	Corrective Actions
When MIx = bb activates	Verify if the system is back to normal condition, and press RESET key to go back to the default.

ID	Display on LCD Keypad	Fault Name	Fault Descriptions
52	AUTO Fault Pcod Password error	Password is locked (Pcod)	Entering the wrong password three consecutive times

Action and Reset	
Action Condition	Entering the wrong password three consecutive times
Action Time	Immediately act
Fault Treatment Parameter	N/A
Reset Method	Manual reset
Reset Condition	Power-off
Record	Yes
Cause	Corrective Actions
Incorrect password input through Pr.00-07	1. Input the correct password after rebooting the motor drive. 2. If you forget the password, do the following steps: Step 1: Input 9999 and press ENTER. Step 2: Repeat step 1. Input 9999 and press ENTER. (You need to finish step 1 and step 2 within 10 seconds. If you don't finish the two steps in 10 seconds, try again.) 3. The parameter settings return to the default when the "Input 9999" process is finished.

ID	Display on LCD Keypad	Fault Name	Fault Descriptions
53	AUTO Fault ccod SW Code Error	SW Code Error (ccod)	This fault code occurs when the firmware version and the control board ID# do not match.
Action and Reset			
Action Condition		N/A	
Action Time		N/A	
Fault Treatment Parameter		N/A	
Reset Method		N/A	
Reset Condition		N/A	
Record		N/A	
Cause		Corrective Actions	
The firmware version may be wrong. For example: Firmware of C2000 series is burned into control board of CH2000 series.		Return to the factory for repair.	

ID	Display on LCD Keypad	Fault Name	Fault Descriptions
54	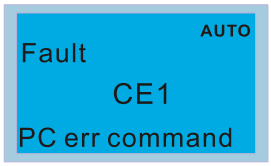	Illegal command (CE1)	Communication command is illegal

Action and Reset	
Action Condition	When the function code is not 03, 06, 10, or 63.
Action Time	Immediately act
Fault Treatment Parameter	N/A
Reset Method	Manual reset
Reset Condition	Immediately reset
Record	No
Cause	**Corrective Actions**
Incorrect communication command from the upper unit	Check if the communication command is correct.
Malfunction caused by interference	Verify the wiring and grounding of the communication circuit. It is recommended to separate the communication circuit from the main circuit, or wire in 90 degrees for effective anti-interference performance.
Different communication setting from the upper unit	Check if the setting for Pr.09-04 is the same as the setting for the upper unit.
Disconnection or bad connection of the cable	Check the cable and replace it if necessary.

ID	Display on LCD Keypad	Fault Name	Fault Descriptions
55	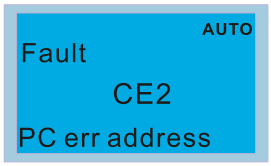	Illegal data address (CE2)	Data address is illegal

Action and Reset	
Action Condition	When the data address is correct.
Action Time	Immediately act
Fault Treatment Parameter	N/A
Reset Method	Manual reset
Reset Condition	Immediately reset
Record	No
Cause	**Corrective Actions**
Incorrect communication command from the upper unit	Check if the communication command is correct.
Malfunction caused by interference	Verify the wiring and grounding of the communication circuit. It is recommended to separate the communication circuit from the main circuit, or wire in 90 degrees for effective anti-interference performance.
Different communication setting from the upper unit	Check if the setting for Pr.09-04 is the same as the setting for the upper unit.
Disconnection or bad connection of the cable	Check the cable and replace it if necessary.

ID	Display on LCD Keypad	Fault Name	Fault Descriptions
56	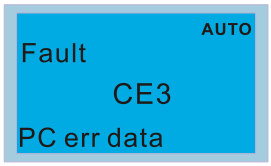	Illegal data value (CE3)	Data value is illegal

Action and Reset	
Action Condition	When the data length is too long
Action Time	Immediately act
Fault Treatment Parameter	N/A
Reset Method	Manual reset
Reset Condition	Immediately reset
Record	No
Cause	**Corrective Actions**
Incorrect communication command from the upper unit	Check if the communication command is correct.
Malfunction caused by interference	Verify the wiring and grounding of the communication circuit. It is recommended to separate the communication circuit from the main circuit, or wire in 90 degrees for effective anti-interference performance.
Different communication setting from the upper unit	Check if the setting for Pr.09-04 is the same as the setting for the upper unit.
Disconnection or bad connection of the cable	Check the cable and replace it if necessary.

ID	Display on LCD Keypad	Fault Name	Fault Descriptions
57	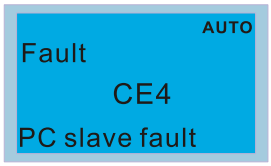	Data is written to read-only address (CE4)	Data is written to read-only address

Action and Reset	
Action Condition	When the data is written to read-only address.
Action Time	Immediately act
Fault Treatment Parameter	N/A
Reset Method	Manual reset
Reset Condition	Immediately reset
Record	No

Cause	Corrective Actions
Incorrect communication command from the upper unit	Check if the communication command is correct.
Malfunction caused by interference	Verify the wiring and grounding of the communication circuit. It is recommended to separate the communication circuit from the main circuit, or wire in 90 degrees for effective anti-interference performance.
Different communication setting from the upper unit	Check if the setting for Pr.09-04 is the same as the setting for the upper unit.
Disconnection or bad connection of the cable	Check the cable and replace it if necessary.

ID	Display on LCD Keypad	Fault Name	Fault Descriptions
58	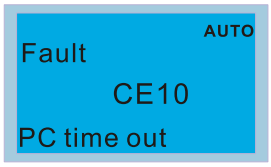	Modbus transmission time-out (CE10)	Modbus transmission time-out occurs

Action and Reset	
Action Condition	When the communication time exceeds the detection time for Pr.09-03 time-out.
Action Time	Pr.09-03
Fault Treatment Parameter	Pr.09-02 0: Warn and continue operation 1: Fault and ramp to stop 2: Fault and coast to stop 3: No warning and continue operation
Reset Method	Manual reset
Reset Condition	Immediately reset
Record	Yes

Cause	Corrective Actions
The upper unit does not transmit the communication command within Pr.09-03 setting time.	Check if the upper unit transmits the communication command within the setting time for Pr.09-03.
Malfunction caused by interference	Verify the wiring and grounding of the communication circuit. It is recommended to separate the communication circuit from the main circuit, or wire in 90 degrees for effective anti-interference performance.
Different communication setting from the upper unit	Check if the setting for Pr.09-04 is the same as the setting for the upper unit.
Disconnection or bad connection of the cable	Check the cable and replace it if necessary.

ID	Display on LCD Keypad	Fault Name	Fault Descriptions
60		Brake transistor error (bF)	The brake transistor of the motor drive is abnormal (for the models with built-in brake transistor).

Action and Reset	
Action Condition	Hardware detection
Action Time	Immediately act
Fault Treatment Parameter	N/A
Reset Method	Manual reset
Reset Condition	Immediately reset
Record	Yes
Cause	**Corrective Actions**
Hardware error	1. Press RESET key to go back to the default. If bF still exists, return to the factory for repair. 2. Power off the motor drive since the internal circuit is abnormal. Use a meter to check if it is short-circuit between B2 to DC-. If short-circuit exists, return to the factory for repair.
Malfunction caused by interference	Verify wiring/grounding of the main circuit to prevent interference.
Using the incorrect brake resistor	Check if the resistance value of the brake resistor matches to the drive.
Incorrect wiring of the brake resistor	Refer to the optional accessories instruction in Chapter 7, and verify the wiring.

ID	Display on LCD Keypad	Fault Name	Fault Descriptions
61	AUTO Fault ydc Y-delta connect	Y-connection / Δ-connection switch error (ydc)	An error occurs when Y-Δ switches
Action and Reset			
Action Condition		1. ydc occurs when the confirmation signals of Y-connection and Δ-connection are conducted at the same time. 2. If any of confirmation signals is not conducted within the setting time for Pr.05-25, ydc occurs.	
Action Time		Pr.05-25	
Fault Treatment Parameter		N/A	
Reset Method		Manual reset	
Reset Condition		Can be reset only when the confirmation signal of Y-connection is conducted if it is Y-connection, or when the confirmation signal of Δ-connection is conducted if it is Δ-connection.	
Record		Yes	
Cause		Corrective Actions	
The electromagnetic valve operates incorrectly during Y-Δ switch.		Check if the electromagnetic valve works normally. If not, replace it.	
Incorrect parameter setting		Check if related parameters are all set up and set correctly.	
The wiring of Y-Δ switch function is incorrect		Check the wiring.	

ID	Display on LCD Keypad	Fault Name	Fault Descriptions
62	AUTO Fault dEb Dec. Energy back	Deceleration energy backup error (dEb)	When Pr.07-13 is not 0, and the power is suddenly off, causing the DC bus voltage lower than the dEb action level, the dEb function acts and the motor ramps to stop. Then dEb displays on the keypad.

Action and Reset		
Action Condition	When Pr.07-13 is not 0, and the DC bus voltage is lower than the level of dEb.	
Action Time	Immediately act	
Fault Treatment Parameter	N/A	
Reset Method	Auto	When Pr.07-13 = 2 (dEb with auto-acceleration / auto-deceleration, the drive outputs the frequency after the power is restored): dEb is automatically cleared.
	Hand	When Pr.07-13 = 1 (dEb with auto-acceleration / auto-deceleration, the drive does not output the frequency after the power is restored): The drive stops when dEb acts and the rotation speed becomes 0 Hz, then the drive can be reset manually.
Reset Condition	AUTO: The fault is automatically cleared. HAND: When the drive decelerates to 0 Hz.	
Record	Yes	
Cause	Corrective Actions	
Unstable power source or the power is off	Check the power system.	
There is any other large load operates in the power system	1. Replace power system with a larger capacity. 2. Use a different power system from the large load system.	

ID	Display on LCD Keypad	Fault Name	Fault Descriptions
63	AUTO Fault oSL Over slip error	Over slip error (oSL)	On the basis of the maximum slip limit set via Pr.10-29, the speed deviation is abnormal. When the motor drive outputs at constant speed, F > H or F < H exceeds the level set via Pr.07-29, and it exceeds the time set via Pr.07-30, oSL shows. oSL occurs in induction motors only.

Action and Reset		
Action condition	Pr.07-29 100% of Pr.07-29 = the maximum limit of the slip frequency (Pr.10-29)	
Action time	Pr.07-30	
Fault treatment parameter	Pr.07-31 0: Warn and continue operation 1: Fault and ramp to stop 2: Fault and coast to stop 3: No warning	
Reset method	Auto	Pr.07-31 = 0 is a warning. When the motor drive outputs at constant speed, and F > H or F < H does not exceed the level set via Pr.07-29 anymore, oSL warning will be cleared automatically.
	Hand	When Pr.07-31 = 1 or 2, oSL is an error, and it needs to reset manually.
Reset condition	Immediately reset	
Record	Pr.07-31 = 1 or 2, oSL is “Fault”, and will be recorded.	

Cause	Corrective Actions
Any of the motor parameters in parameter group 5 may be incorrect	Check the motor parameters.
Overload	Decrease the load.
Any of the setting value of Pr.07-29, 07-30, and 10-29 is improper	Check the setting of oSL protection function related parameters.

ID	Display on LCD Keypad	Fault Name	Fault Descriptions
64	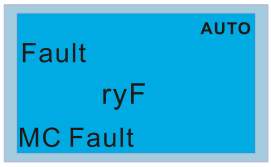	Electric valve switch error (ryF)	Electric valve switch error when executing Soft Start

Action and Reset	
Action Condition	Hardware detection (Frame D and above)
Action Time	Immediately act
Fault Treatment Parameter	N/A
Reset Method	Manual reset
Reset Condition	Reset when the electric valve switch is correctly closed
Record	Yes
Cause	Corrective Actions
The input power is abnormal	Check if the power is shut down during the drive operation. Check if the three-phase input power is normal.
Malfunction caused by interference	Verify the wiring / grounding of the main circuit to prevent interference.
Hardware failure	Cycle the power after checking the power. If ryF error still exists, return to the factory for repair.

ID	Display on LCD Keypad	Fault Name	Fault Descriptions
65	AUTO Fault PGF5 PG HW Error	Hardware error of PG card (PGF5)	Hardware error of PG card
Action and Reset			
Action Condition		1. The PG card (PG01U / PG02U) can only be used with the permanent magnetic motor. When the power is ON and Pr.00-04 = 29 pole section shows 0 or 7 (wiring error or no U/V/W signal input), the PGF5 error will be activated. 2. The drive receives the operation command right after the power is ON, meanwhile, the PG card is not ready yet.	
Action Time		Immediately act	
Fault Treatment Parameter		N/A	
Reset Method		Manual reset	
Reset Condition		Reset after cycle the power.	
Record		Yes	
Cause		Corrective Actions	
Wiring error or there is no U/V/W signal input		Re-connect the cables correctly.	
Encoder failure		Verify if it is the UVW encoder.	
The setting of encoder parameter is incorrect		Choose the correct setting of Pr.10-00.	
If the motor selection switch of PG card on the correct position		Check if it is the UVW encoder or Delta encoder.	
PG card selection is incorrect		Install the correct PG card.	

ID	Display on LCD Keypad	Fault Name	Fault Descriptions
68	AUTO Fault SdRv SpdFbk Dir Rev	Reverse direction of the speed feedback (SdRv)	Rotating direction is different from the commanding direction detected by the sensorless

Action and Reset	
Action Condition	Software detection
Action Time	Pr.10-09
Fault Treatment Parameter	Pr.10-08 0: Warn and keep operation 1: Fault and ramp to stop 2: Fault and coast to stop
Reset Method	Manual reset
Reset Condition	Immediately reset
Record	When Pr.10-08 = 1 or 2, SdRv is a “Fault”, and the fault is recorded.

Cause	Corrective Actions
The setting of Pr.10-25 FOC bandwidth of speed observer is improper	Decrease the setting of Pr.10-25.
The setting of motor parameter is incorrect	Reset the motor parameter and execute parameter tuning.
The motor cable is abnormal or broken	Check if the cable is well functioned or replace the cable.
A reverse force is exerted, or the motor runs in a reverse direction at start	Start speed tracking function (Pr.07-12).
Malfunction caused by interference	Verify the wiring of the control circuit and wiring/grounding of the main circuit to prevent interference.

ID	Display on LCD Keypad	Fault Name	Fault Descriptions
69	AUTO Fault SdOr SpdFbk over SPD	Over speed rotation feedback (SdOr)	Over speed rotation detected by sensorless
Action and Reset			
Action Condition		Pr.10-10	
Action Time		Pr.10-11	
Fault Treatment Parameter		Pr.10-12 0: Warn and keep operation 1: Fault and ramp to stop 2: Fault and coast to stop	
Reset Method		Manual reset	
Reset Condition		Immediately reset	
Record		When Pr.10-12 = 1 or 2, SdOr is a “Fault”, and the fault is recorded.	
Cause		Corrective Actions	
The setting of Pr.10-25 FOC bandwidth of speed observer is improper		Decrease the setting of Pr.10-25.	
The setting of ASR bandwidth of speed controller is improper		Increase the bandwidth of ASR speed controller.	
The setting of motor parameter is incorrect		Reset motor parameter and execute parameter tuning.	
Malfunction caused by interference		Verify the wiring of the control circuit and wiring / grounding of the main circuit to prevent interference.	

ID	Display on LCD Keypad	Fault Name	Fault Descriptions
70	AUTO Fault SdDe SpdFbk deviate	Large deviation of speed feedback (SdDe)	A large deviation between the rotating speed and the command detected by the sensorless

Action and Reset	
Action Condition	Pr.10-13
Action Time	Pr.10-14
Fault Treatment Parameter	Pr.10-15 0: Warn and keep operation 1: Fault and ramp to stop 2: Fault and coast to stop
Reset Method	Manual reset
Reset Condition	Immediately reset
Record	When Pr.10-15=1 or 2, SdDe is a “Fault”, and the fault is recorded.
Cause	Corrective Actions
Improper parameter setting for abnormal rotating slip function	Reset proper setting for Pr.10-13 and Pr.10-14.
Improper parameter setting for ASR and acceleration/deceleration	Reset ASR parameters. Set proper acceleration/deceleration time.
The acceleration/deceleration time is too short	Reset proper acceleration / deceleration time.
Motor shaft lock	Remove the cause of motor shaft lock.
The mechanical brake is not released	Verify the system action timeline.
Incorrect parameter setting for torque limit (Pr.06-12, Pr.11-17–20)	Adjust the setting to proper value.
Malfunction caused by interference	Verify the wiring of the control circuit and wiring/grounding of the main circuit to prevent interference.

ID	Display on LCD Keypad	Fault Name	Fault Descriptions
71		Watchdog (WDTT)	Watchdog error
Action and Reset			
Action Condition		Hardware detection	
Action Time		N/A	
Fault Treatment Parameter		N/A	
Reset Method		Hardware failure and cannot reset. Cycle the power.	
Reset Condition		N/A	
Record		Yes	
Cause		Corrective Actions	
Hardware interference		Verify the wiring of the control circuit and wiring / grounding of the main circuit to prevent interference. If the WDTT fault still exists, return to the factory for repair.	

ID	Display on LCD Keypad	Fault Name	Fault Descriptions
72	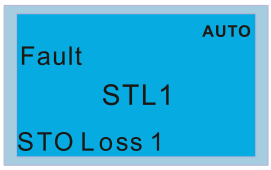	STO Loss 1 (STL1)	STO1–SCM1 internal loop detection error

Action and Reset	
Action Condition	Hardware detection
Action Time	Immediately act
Fault Treatment Parameter	N/A
Reset Method	Hardware failure and cannot reset. Cycle the power.
Reset Condition	N/A
Record	Yes
Cause	**Corrective Actions**
STO1 and SCM1 short circuit lines are not connected	Connect the short circuit line.
Hardware failure	After you make sure all the wiring is correct, if STOL fault still exists after cycling the power, please return to the factory for repair.
Bad connection of the IO card	Check if the PIN of IO card is broken. Check if the IO card connects to the control board correctly, and if the screws are tightened well.
The IO card does not match the version of the control board	Contact local agent or Delta

ID	Display on LCD Keypad	Fault Name	Fault Descriptions
73	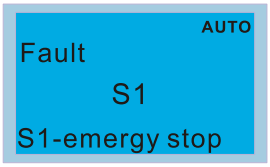	Emergency stop for external safety (S1)	Emergency stop for external safety

Action and Reset	
Action Condition	Hardware detection
Action Time	Immediately act
Fault Treatment Parameter	N/A
Reset Method	Manual reset
Reset Condition	Reset only after S1 error is cleared.
Record	Yes
Cause	**Corrective Actions**
The switch action of S1 and SCM (OPEN)	Reset the switch and cycle the power.
S1 and SCM short circuit lines are not connected	Re-connect the short circuit lines
Malfunction caused by interference	Verify the wiring / grounding of the main circuit, control circuit and encoder to prevent interference.
Hardware failure	If S1 fault still exists after cycling the power, please return to the factory for repair.
Poor connection of the IO card	Check if the PIN of IO card is broken. Check if the IO card connects to the control board correctly, and if the screws are tightened well.
The IO card does not match the version of the control board	Contact local agent or Delta.

ID	Display on LCD Keypad	Fault Name	Fault Descriptions
75	AUTO Fault Brk EXT-Brake Error	External brake error (Brk)	External mechanical brake error The MO terminal is active when MOx = 12, 42, 47 or 63, but the MIx = 55 does not receive signal for mechanical brake action during the set time of Pr.02-56.

Action and Reset	
Action Condition	MIx = 55 did not receive signal for the mechanical brake action during the set time of Pr.02-56.
Action Time	Pr.02-56
Fault Treatment Parameter	N/A
Reset Method	Manual reset
Reset Condition	Immediately reset
Record	Yes
Cause	**Corrective Actions**
Mechanical brake error	Verify if the mechanical brake can work correctly. Replace mechanical brake.
Incorrect parameter setting	If there is no brake-confirming signal to use, set Pr.02-56 = 0.
Signal cable is loose or cut off	Tighten the screws. Replace the signal cable with a new one.
The time of Pr.02-56 is set too short	Increase the time setting of Pr.02-56.
Malfunction caused by interference	Verify the wiring / grounding of the main circuit, control circuit and encoder to prevent interference.

ID	Display on LCD Keypad	Fault Name	Fault Descriptions
76	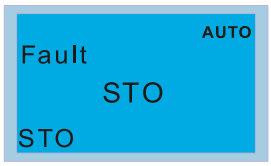	STO (STO)	Safety Torque Off function active

Action and Reset		
Action Condition	Hardware detection	
Action Time	Immediately act	
Fault Treatment Parameter	N/A	
Reset Method	Auto	When Pr.06-44 = 1 and after STO error is cleared, it automatically resets.
	Manual	When Pr.06-44 = 0 and after STO error is cleared, reset it manually.
Reset Condition	Reset only after STO error is cleared.	
Record	Yes	

Cause	Corrective Actions
The switch action of STO1/SCM1 and STO2/SCM2 (OPEN)	Reset the switch (ON) and cycle the power.
Poor connection of the IO card	Check if the PIN of IO card is broken. Check if the IO card connects to the control board correctly, and if the screws are tightened well.
The IO card does not match the version of the control board	Contact local agent or Delta.

ID	Display on LCD Keypad	Fault Name	Fault Descriptions
77		STO Loss 2 (STL2)	STO2–SCM2 internal loop detection error

Action and Reset	
Action Condition	Hardware detection
Action Time	Immediately act
Fault Treatment Parameter	N/A
Reset Method	Hardware failure and cannot reset. Cycle the power.
Reset Condition	N/A
Record	Yes
Cause	Corrective Actions
STO2 and SCM2 short circuit lines are not connected	Connect the short circuit lines.
Hardware failure	After you make sure all the wiring is correct, if STL2 fault still exists after cycling the power, return to the factory for repair.
Poor connection of the IO card	Check if the PIN of IO card is broken. Check if the IO card connects to the control board correctly, and if the screws are tightened well.
The IO card does not match the version of the control board	Contact local agent or Delta.

ID	Display on LCD Keypad	Fault Name	Fault Descriptions
78	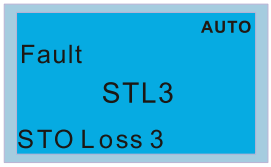	STO Loss 3 (STL3)	STO1–SCM1 and STO2–SCM2 internal loop detection error

Action and Reset	
Action Condition	Hardware detection
Action Time	Immediately act
Fault Treatment Parameter	N/A
Reset Method	Hardware failure and cannot reset. Cycle the power.
Reset Condition	N/A
Record	Yes
Cause	Corrective Actions
STO1 and SCM1, or STO2 and SCM2 short circuit lines are not connected	Re-connect the short circuit lines.
Hardware failure	After you make sure all the wiring is correct, if STL3 fault still exists after cycling the power, return to the factory for repair.
Poor connection of the IO card	Check if the PIN of IO card is broken. Check if the IO card connects to the control board correctly, and if the screws are tightened well.
The IO card does not match the version of the control board	Contact local agent or Delta.

ID	Display on LCD Keypad	Fault Name	Fault Descriptions
82	AUTO Fault OPHL U phase lacked	Output phase loss U phase (OPHL)	U phase output phase loss

Action and Reset	
Action Condition	Pr.06-47
Action Time	Pr.06-46 Pr.06-48: Use the setting value of Pr.06-48 first if there is DC braking function, and then use that of Pr.06-46.
Fault Treatment Parameter	Pr.06-45 0: Warn and keep operation 1: Fault and ramp to stop 2: Fault and coast to stop 3: No warning
Reset Method	Manual reset
Reset Condition	Immediately reset
Record	Pr.06-45 = 1 or 2 is “Fault” and will be recorded.
Cause	Corrective Actions
The three-phase impedance of motor is unbalanced	Replace the motor.
The motor is wired incorrectly	Check the cable condition. Replace the cable.
Using a single-phase motor	Choose a three-phase motor
The current sensor is damaged	Check the flat cable of the control board. Re-do the wiring and test again if the flat cable is loose. If the fault still exists, return the unit to the factory. Verify that the three-phase current is balanced via a current clamp meter. If it is balanced and the OPHL fault still exists, return the unit to the factory
The drive capacity is much larger than the motor capacity	Make sure the capacity of the drive and motor match to each other.

ID	Display on LCD Keypad	Fault Name	Fault Descriptions
83	AUTO Fault OPHL V phase lacked	Output phase loss V phase (OPHL)	V phase output phase loss

Action and Reset	
Action Condition	Pr.06-47
Action Time	Pr.06-46 Pr.06-48: Use the setting value of Pr.06-48 first. If DC braking function activates, use that of Pr.06-46.
Fault Treatment Parameter	Pr.06-45 0: Warn and keep operation 1: Fault and ramp to stop 2: Fault and coast to stop 3: No warning
Reset Method	Manual reset
Reset Condition	Immediately reset
Record	When Pr.06-45 = 1 or 2, OPHL is a “Fault”, and the fault is recorded.

Cause	Corrective Actions
Unbalanced three-phase impedance of the motor	Replace the motor.
Check if the wiring is incorrect	Check the cable and replace it if necessary.
Check if the motor is a single-phase motor	Choose a three-phase motor.
Check if the current sensor is broken	Check if the control board cable is loose. If yes, reconnect the cable and run the drive to test. If the fault still exists, return to the factory for repair. Check if the three-phase current is balanced with a current clamp meter. If the current is balanced and the OPHL fault still exists, return to the factory for repair.
Check if the drive capacity is larger than the motor capacity	Choose the drive that matches the motor capacity.

ID	Display on LCD Keypad	Fault Name	Fault Descriptions
84	AUTO Fault OPHL W phase lacked	Output phase loss W phase (OPHL)	W phase output phase loss

Action and Reset	
Action Condition	Pr.06-47
Action Time	Pr.06-46 Pr.06-48: Use the setting value of Pr.06-48 first. If DC braking function activates, use that of Pr.06-46.
Fault Treatment Parameter	Pr.06-45 0: Warn and continue operation 1: Fault and ramp to stop 2: Fault and coast to stop 3: No warning
Reset Method	Manual reset
Reset Condition	Immediately reset
Record	When Pr.06-45 = 1 or 2, OPHL is a “Fault”, and the fault is recorded.

Cause	Corrective Actions
Unbalanced three-phase impedance of the motor	Replace the motor.
Check if the wiring is incorrect	Check the cable and replace it if necessary.
Check if the motor is a single-phase motor	Choose a three-phase motor.
Check if the current sensor is broken	Check if the control board cable is loose. If yes, reconnect the cable and run the drive to test. If the fault still exists, return to the factory for repair. Check if the three-phase current is balanced with a current clamp meter. If the current is balanced and the OPHL fault still exists, return to the factory for repair.
Check if the drive capacity is larger than the motor capacity	Choose the drive that matches the motor capacity.

ID	Display on LCD Keypad	Fault Name	Fault Descriptions
85	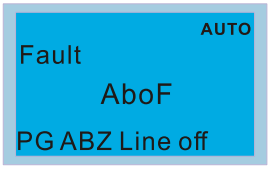	PG ABZ line off (AboF)	The drive detects the ABZ line off when using ABZ and UVW signal encoder (only supports PG02U line off function).

Action and Reset	
Action Condition	Hardware detection
Action Time	Immediately act
Fault Treatment Parameter	N/A
Reset Method	Manual reset
Reset Condition	Immediately reset
Record	Yes
Cause	Corrective Actions
The ABZ signal is cut off	Check if the signal cable between encoder and PG card is correct or cut off.

ID	Display on LCD Keypad	Fault Name	Fault Descriptions
86	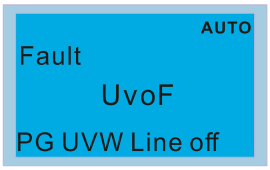	PG UVW line off (UvoF)	The drive detects the UVW line off when using ABZ and UVW signal encoder (only supports PG02U line off function).

Action and Reset	
Action Condition	Hardware detection
Action Time	Immediately act
Fault Treatment Parameter	N/A
Reset Method	Manual reset
Reset Condition	Immediately reset
Record	Yes
Cause	Corrective Actions
The UVW signal is cut off	Check if the signal cable between encoder and PG card is correct or cut off.

ID	Display on LCD Keypad	Fault Name	Fault Descriptions
87	AUTO Fault oL3 Derating Error	Overload protection at low frequency (oL3)	Low frequency and high current protection
Action and Reset			
Action Condition		Software detection	
Action Time		Immediately act	
Fault Treatment Parameter		N/A	
Reset Method		Manual reset	
Reset Condition		Immediately reset	
Record		Yes	
Cause		Corrective Actions	
Power module overload		1. Reduce the motor drive's load. 2. Decrease the carrier frequency (Pr.00-17). 3. Decrease the ambient temperature of the drive's operation. 4. Decrease the current limit. 5. Choose motor drives with lager power. 6. Increases acceleration time. 7. If the drive is in V/F mode, decrease the output voltage for low-frequency operation.	

ID	Display on LCD Keypad	Fault Name	Fault Descriptions
88	AUTO Fault INTR1 Interrupt1 Err INTR1	CPU timing error 1 (INTR1)	MCU overloading interrupts the control circuit timing and causes abnormal execution

Action and Reset	
Action Condition	N/A
Action Time	Immediately act
Fault Treatment Parameter	N/A
Reset Method	Manual reset
Reset Condition	N/A
Record	Yes
Cause	**Corrective Actions**
PWM carrier is set too high, and causes the control timing abnormal	Decrease the setting of the carrier.

ID	Display on LCD Keypad	Fault Name	Fault Descriptions
89	AUTO Fault RoPd Rotor Pos. Error	Rotor position detection error (RoPd)	Rotor position detection error protection

Action and Reset	
Action Condition	Reset the software
Action Time	Immediately act
Fault Treatment Parameter	N/A
Reset Method	Manual reset
Reset Condition	Immediately reset
Record	Yes
Cause	**Corrective Actions**
Check if the motor cable is abnormal or broken	Check or replace the cable.
Motor coil error	Replace the motor.
Hardware failure	IGBT broken. Return to the factory for repair.
Drive's current feedback line error	Cycle the power. If RoPd still occurs during operation, return to the factory for repair.

ID	Display on LCD Keypad	Fault Name	Fault Descriptions
90	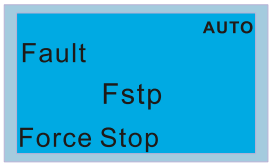	Force to stop (FStp)	Keypad forces PLC to Stop

Action and Reset	
Action Condition	When Pr.00-32 = 1, STOP button on the keypad is valid. When giving the STOP command during the PLC operation, FStp fault will active.
Action Time	Immediately act
Fault Treatment Parameter	N/A
Reset Method	Manual reset
Reset Condition	Immediately reset
Record	Yes
Cause	Corrective Actions
Pr.00-32 = 1: keypad STOP button is valid	Check if it is necessary to set Pr.00-32 = 0, so the keypad STOP button is invalid.
Press STOP button during PLC operation	Verify the timing of STOP function.

ID	Display on LCD Keypad	Fault Name	Fault Descriptions
92	AUTO Fault LEr Pul. Tun. L Err	Pulse Tuning Inductance (L) Error (LEr)	This fault code occurs when D-axis and Q- axis inductance auto-tunes for more than 3 times.

Action and Reset	
Action Condition	Software detection
Action Time	Act immediately
Fault Treatment Parameter	N/A
Reset Method	Manual reset
Reset Condition	Reset immediately
Record	Yes
Cause	Corrective Actions
The motor drive does not disengage the load.	Verify if the motor drive is auto-tuning.
Mistake on setting up the motor parameters.	Verify if you set up the motor parameters according to the nameplate on the motor.

ID	Display on LCD Keypad	Fault Name	Fault Descriptions
93	AUTO Fault TRAP CPU Trap 0 error	CPU error 0 (TRAP)	CPU crash
Action and Reset			
Action Condition		Hardware detection	
Action Time		Immediately act	
Fault Treatment Parameter		N/A	
Reset Method		Cannot reset, power off.	
Reset Condition		N/A	
Record		Yes	
Cause		Corrective Actions	
Hardware interference		Verify the wiring of control circuit, and the wiring/grounding of the main circuit to prevent interference. If TRAP fault still exists, return to the factory for repair.	
Hardware failure		Return to the factory for repair.	
CPU is in an infinite loop		Cycle the power. If the TRAP fault still exists, return to the factory for repair.	

ID	Display on LCD Keypad	Fault Name	Fault Descriptions
101	AUTO Fault CGdE Guarding T-out	CANopen guarding error (CGdE)	CANopen guarding error
Action and Reset			
Action Condition		When CANopen Node Guarding detects that one of the slaves does not response, the CGdE fault will activate. The upper unit sets factor and time during configuration.	
Action Time		The time that upper unit sets during configuration	
Fault Treatment Parameter		N/A	
Reset Method		Manual reset	
Reset Condition		The upper unit sends a reset package to clear this fault	
Record		Yes	
Cause		Corrective Actions	
The guarding time is too short, or less detection times		Increase the guarding time (Index 100C) and detection times.	
Malfunction caused by interference		1. Verify the wiring and grounding of the communication circuit. It is recommended to separate the communication circuit from the main circuit, or wire in 90 degrees for effective anti-interference performance. 2. Make sure the communication circuit is wired in series. 3. Use CANopen cable or add terminating resistance.	
Communication cable is broken or bad connected		Check or replace the communication cable.	

ID	Display on LCD Keypad	Fault Name	Fault Descriptions
102	AUTO Fault CHbE Heartbeat T-out	CANopen heartbeat error (CHbE)	CANopen heartbeat error
Action and Reset			
Action Condition		When CANopen Heartbeat detects that one of the slaves does not response, the CHbE fault will activate. The upper unit sets the confirming time of producer and consumer during configuration.	
Action Time		The confirming time that upper unit sets for producer and consumer during configuration.	
Fault Treatment Parameter		N/A	
Reset Method		Manual reset	
Reset Condition		The upper unit sends a reset package to clear this fault	
Record		Yes	
Cause		Corrective Actions	
The heartbeat time is too short		Increase heartbeat time (Index 100C).	
Malfunction caused by interference		1. Verify the wiring and grounding of the communication circuit. It is recommended to separate the communication circuit from the main circuit, or wire in 90 degree for effective anti-interference performance. 2. Make sure the communication circuit is wired in series. 3. Use CANopen cable or add terminating resistance.	
Communication cable is broken or bad connected		Check or replace the communication cable.	

ID	Display on LCD Keypad	Fault Name	Fault Descriptions
104	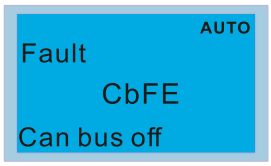	CANopen bus off error (CbFE)	CANopen bus off error

Action and Reset		
Action Condition	Hardware	When CANopen card is not installed, CbFE fault will occur.
	Software	When the master received wrong communication package, CbFE fault will occur. Too much interference on BUS When the CAN_H and CAN_L communication cable is short, the master will receive wrong package, and CbFE fault will occur.
Action Level	Immediately act	
Fault Treatment Parameter	N/A	
Reset Method	Manual reset	
Reset Condition	Cycle the power	
Record	Yes	

Cause	Corrective Actions
Check if the CANopen card is installed	Make sure the CANopen card is installed.
Check if the CANopen speed is correct	Reset CANopen speed (Pr.09-37).
Malfunction caused by interference	1. Verify the wiring and grounding of the communication circuit. It is recommended to separate the communication circuit from the main circuit, or wire in 90 degrees for effective anti-interference performance. 2. Make sure the communication circuit is wired in series. 3. Use CANopen cable or add terminating resistance.
Communication cable is broken or bad connected	Check or replace the communication cable.

ID	Display on LCD Keypad	Fault Name	Fault Descriptions
105	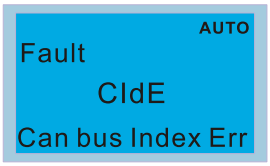	CANopen index error (CIdE)	CANopen index error
Action and Reset			
Action Condition		Software detection	
Action Time		Immediately act	
Fault Treatment Parameter		N/A	
Reset Method		Manual reset	
Reset Condition		Upper unit sends a reset package to clear this fault	
Record		Yes	
Cause		Corrective Actions	
Incorrect setting of CANopen index		Reset CANopen Index (Pr.00-02 = 7).	

ID	Display on LCD Keypad	Fault Name	Fault Descriptions
106	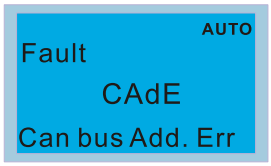	CANopen station address error (CAdE)	CANopen station address error (only supports 1–127)

Action and Reset	
Action Condition	Software detection
Action Time	Immediately act
Fault Treatment Parameter	N/A
Reset Method	Manual reset (Pr.00-02 = 7)
Reset Condition	N/A
Record	Yes
Cause	**Corrective Actions**
Incorrect setting of CANopen station address	1. Disable CANopen (Pr.09-36 = 0). 2. Reset CANopen (Pr.00-02 = 7). 3. Reset CANopen station address (Pr.09-36).

ID	Display on LCD Keypad	Fault Name	Fault Descriptions
107	AUTO Fault CFrE Can bus off	CANopen memory error (CFrE)	CANopen memory error
Action and Reset			
Action Condition		When the user update firmware version of the control board, the FRAM internal data will not be changed, and then CFrE fault will occur.	
Action Time		Immediately act	
Fault Treatment Parameter		N/A	
Reset Method		Manual reset	
Reset Condition		Pr.00-02 = 7	
Record		Pr.00-21 = 3, the fault is recorded	
Cause		Corrective Actions	
CANopen internal memory error		1. Disable CANopen (Pr.09-36 = 0). 2. Reset CANopen (Pr.00-02 = 7). 3. Reset CANopen station address (Pr.09-36).	

ID	Display on LCD Keypad	Fault Name	Fault Descriptions
111	AUTO Fault ictE InrCom Time Out	InrCOM time-out error (ictE)	Internal communication time-out
Action and Reset			
Action Condition		Pr.09-31 = -1 – -10 (there is no -9), when the internal communication between Slave and Master is abnormal, IctE fault will occur.	
Action Time		Immediately act	
Fault Treatment Parameter		N/A	
Reset Method		Automatically reset after the internal communication is normal	
Reset Condition		N/A	
Record		Yes	
Cause		Corrective Actions	
Malfunction caused by interference		Verify the wiring and grounding of the communication circuit. It is recommended to separate the communication circuit from the main circuit, or wire in 90 degrees for effective anti-interference performance.	
The communication condition is different with the upper unit		Verify the setting of Pr.09-04 is the same as the setting of upper unit.	
Communication cable is broken or bad connected		Check or replace the communication cable.	

ID	Display on LCD Keypad	Fault Name	Fault Descriptions
112	AUTO Fault SfLK PMLess Shaft Lock	PMLess shaft lock (SfLK)	The drive has RUN command with output frequency, but the permanent magnetic motor does not turn.

Action and Reset	
Action Condition	Software detection
Action Time	3 sec.
Fault Treatment Parameter	N/A
Reset Method	Manual reset
Reset Condition	Immediately reset
Record	Yes
Cause	**Corrective Actions**
Improper setting of the speed observer bandwidth	Increase the setting value.
Motor shaft lock	Remove causes of the motor shaft lock.
Motor error (e.g. demagnetization)	Replace the motor with a new one.

ID	Display on LCD Keypad	Fault Name	Fault Descriptions
142	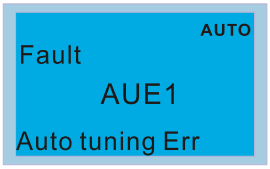	Auto-tune error 1 (AUE1)	No feedback current error when motor parameter automatically detects

Action and Reset	
Action Condition	Software detection
Action Time	Immediately act
Fault Treatment Parameter	N/A
Reset Method	Manual reset
Reset Condition	Immediately reset
Record	Yes
Cause	**Corrective Actions**
Motor is not wired	Wire the motor correctly.
The electromagnetic contactor is used as an open state on the output side of the drive (U/V/W).	Verify that the electromagnetic valve is closed.

ID	Display on LCD Keypad	Fault Name	Fault Descriptions
143	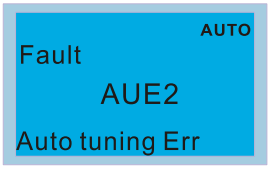	Auto-tune error 2 (AUE2)	Motor phase loss error when motor parameter automatically detects

Action and Reset	
Action Condition	Software detection
Action Time	Immediately act
Fault Treatment Parameter	N/A
Reset Method	Manual reset
Reset Condition	Immediately reset
Record	Yes
Cause	**Corrective Actions**
Incorrect motor wiring	Wire the motor correctly.
Motor error	Check if the motor works normally.
The electromagnetic contactor is used as an open state on the output side of the drive (U/V/W).	Verify that the three-phases of the electromagnetic valve are all closed.
Motor U/V/W wire error	Check if the wires are broken.

ID	Display on LCD Keypad	Fault Name	Fault Descriptions
144	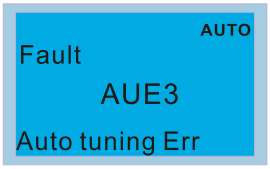	Auto-tune error 3 (AUE3)	No load current I_0 measurement error when motor parameter automatically detects.

Action and Reset	
Action Condition	Software detection
Action Time	Immediately act
Fault Treatment Parameter	N/A
Reset Method	Manual reset
Reset Condition	Immediately reset
Record	Yes
Cause	**Corrective Actions**
Incorrect settings for the motor parameter (rated current)	Check the settings for Pr.05-01 / Pr.05-13 / Pr.05-34.
Motor error	Check if the motor works normally.

ID	Display on LCD Keypad	Fault Name	Fault Descriptions
148	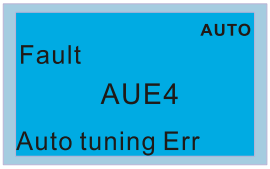	Auto-tune error 4 (AUE4)	Leakage inductance Lsigma measurement error when motor parameter automatically detects.

Action and Reset	
Action Condition	Software detection
Action Time	Immediately act
Fault Treatment Parameter	N/A
Reset Method	Manual reset
Reset Condition	Immediately reset
Record	Yes
Cause	**Corrective Actions**
Motor error	Check if the motor works normally.
Incorrect setting of motor parameters (base frequency)	Check the setting of Pr.01-01.

ID	Display on LCD Keypad	Fault Name	Fault Descriptions
171	AUTO Fault oPEE Over Pos Err Lim	Over Position Error Limit (oPEE)	This fault code occurs: When the positioning error of a position controller is bigger than Pr.11-51 <Maximum allowable position-following error>. And when Pr.11-54: Treatment to the large position control error is set as 1: Fault and ramp to stop or 2: Fault and coast to stop.

Action and Reset	
Action Condition	Pr.11-51
Action Time	Act immediately
Fault Treatment Parameter	Pr.11-54
Reset Method	Manual reset
Reset Condition	
Record	Yes

Cause	Corrective Actions
The acceleration / deceleration time may not be correct.	Verify if the acceleration / deceleration time is correct.
Setting value of Pr.11-51 may be too small.	Verify if the setting value of Pr.11-51 is too small.
The positon control of the motor drive may not be working properly.	1. Verify if the position control works properly. 2. Verify if the settings of APR bandwidth control and the gain value for the APR feed forward are correct.
The setting of command curve at the upper unit during the whole pulse positioning process may not be right.	If you set Pr.11-40 = 1 (Input from external pulse) or set MI=90 (Position command source switch and choose 1: Input from external pulse), you need to verify if the acceleration / deceleration curve of the pulse given by the upper unit is correct.

ID	Display on LCD Keypad	Fault Name	Fault Descriptions
174	AUTO Fault EcEr Enc Error	Encoder error (EcEr)	The difference of encoder's two sampling positions is too large (over the expected fiducial value)
Action and Reset			
Action Condition		The difference of encoder's two sampling positions is too large, the EcEr occurs depending on the encoder position	
Action Time		Pr.10-46 high bit determines the allowed continuous number of times For example: Pr.10-46 = 050D, the allowed continuous number of times is 5 errors	
Fault Treatment Parameter		N/A	
Reset Method		Manual reset	
Reset Condition		N/A	
Record		Yes	
Cause		Corrective Actions	
Encoder is interfered by the noise, and cause the feedback position error		Verify if the PG card and encoder wiring meets anti-interference performance.	

ID	Display on LCD Keypad	Fault Name	Fault Descriptions
175	AUTO Fault EcCe Enc Com Error	Encoder communication error (EcCe)	Encoder communication feedback error CRC checksum error
Action and Reset			
Action Condition		Verify if the encoder feedback data CRC is correct in each sampling cycle	
Action Time		Pr.10-46 high bit determines the allowed continuous number of times For example: Pr.10-46 = 050D, the allowed continuous number of times is 5 errors	
Fault Treatment Parameter		N/A	
Reset Method		Manual reset	
Reset Condition		N/A	
Record		Yes	
Cause		Corrective Actions	
Encoder is interfered by the noise, causing encoder feedback packet error		1. Check the PG card wiring and anti-interference performance 2. If the drive continuously receives faults more than 5 times (single-turn counting error, encoder lost, encoder communication error, PG command error, etc.), the keypad displays the code of the last error. You can reset the error after the fault.	

ID	Display on LCD Keypad	Fault Name	Fault Descriptions
176	AUTO Fault EcOF Enc Pos OverFlow	Encoder multi-turn overflows (EcOF)	When the multi-turn counting exceeds the encoder's maximum counting value (the encoder rotates over the countable maximum turns), the EcOF occurs.
Action and Reset			
Action Condition	Encoder rotates for turns over its counting upper limit		
Action Time	Immediately acts		
Fault Treatment Parameter	Pr.10-60: bit8–11 0: Warn but continue operation 1: Warn and stop 2: No warn and no stop		
Reset Method	Manual reset		
Reset Condition	Press RESET key to clear the fault		
Record	Yes		
Cause	Corrective Actions		
Encoder's rotating turns exceeds the countable range	1. Press RESET key to clear the fault 2. Reboot the drive. 3. Re-execute the homing process		

ID	Display on LCD Keypad	Fault Name	Fault Descriptions
177	AUTO Fault EcNP Enc Batt NoPow	Encoder battery no power (EcNP)	When the battery voltage is lower than 2.5 V, the EcNP error occurs.

Action and Reset	
Action Condition	The encoder battery is lower than 2.5 V
Action Time	Acts when the drive is powered on
Fault Treatment Parameter	N/A
Reset Method	1. You cannot directly reset the fault 2. Replace the battery and reboot the drive
Reset Condition	Replace the battery
Record	Yes
Cause	Corrective Actions
Encoder battery no power	1. Replace the battery, the reboot the drive 2. If the multi-position memory function is abnormal, re-execute the homing action after replacing the battery and rebooting the power 3. If the multi-position data is not needed, you do not need to install batteries for the encoder. Set Pr.10-23 bit0 = 0 to disable the low battery detection.

ID	Display on LCD Keypad	Fault Name	Fault Descriptions
178	AUTO Fault EcMc Enc MultiCNT	Encoder multi-turn error (EcMc)	Encoder reports accumulated multi-turn position is wrong

Action and Reset	
Action Condition	N/A
Action Time	Activates when the power is on
Fault Treatment Parameter	N/A
Reset Method	Directly reset
Reset Condition	N/A
Record	Yes
Cause	Corrective Actions
Encoder's accumulated number of turns is wrong	1. Reset the fault 2. Re-execute homing process

ID	Display on LCD Keypad	Fault Name	Fault Descriptions
179	AUTO Fault PgMr PG Multi Read	PG multi-turn read error (PgMr)	The motor drive cannot read the multi-turn position when the PG card is powered on for the first time
Action and Reset			
Action Condition	N/A		
Action Time	Activates when power is on		
Fault Treatment Parameter	N/A		
Reset Method	Cannot reset directly, reboot the PG card to read the encoder multi-turn position again		
Reset Condition	N/A		
Record	Yes		
Cause	Corrective Actions		
Encoder is interfered by the noise; PG card cannot read the multi-turn position	Check the PG card wiring, anti-interference performance and reboot the drive.		

ID	Display on LCD Keypad	Fault Name	Fault Descriptions
180	AUTO Fault EcSc Enc SingleCNT	Encoder single-turn error (EcSc)	Encoder reports accumulated single-turn position is wrong
Action and Reset			
Action Condition	N/A		
Action Time	Pr.10-46 high bit determines the allowed continuous number of times For example: Pr.10-46 = 050D, the allowed continuous number of times is 5 errors		
Fault Treatment Parameter	N/A		
Reset Method	Manual reset		
Reset Condition	N/A		
Record	Yes		
Cause	Corrective Actions		
Encoder accumulated single-turn position is wrong	1. Immediately stop the drive 2. Check each position sampling report, if the single-turn counting error occurs occasionally, the drive executes position interpolation. 3. If the drive continuously receives faults more than 5 times (single-turn counting error, encoder lost, encoder communication error, etc.), the keypad displays the code of the last error. You can reset the error after the fault.		

ID	Display on LCD Keypad	Fault Name	Fault Descriptions
181	AUTO Fault PgCe PG Cmd Error	PG command error (PgCe)	PG command error. The SPI communication between PG card and the drive is interfered; PG card cannot receive the drive's command correctly. The PgCe shows if the above error continuously occurs for 5 times.
Action and Reset			
Action Condition		Verify if the PG card reported data is correct for each sampling cycle	
Action Time		Pr.10-46 high bit determines the allowed continuous number of times For example: Pr.10-46 = 050D, the allowed continuous number of times is 5 errors	
Fault Treatment Parameter		N/A	
Reset Method		Manual reset	
Reset Condition		N/A	
Record		Yes	
Cause		Corrective Actions	
The communication between PG card and the drive is interfered		1. Verify if the PG card wiring meets anti-interference performance. 2. If the drive continuously receives faults more than 5 times (single-turn counting error, encoder lost, encoder communication error, etc.), the keypad displays the code of the last error. You can reset the error after the fault.	

ID	Display on LCD Keypad	Fault Name	Fault Descriptions
182	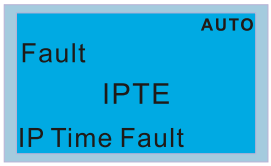	Interpolation time setting error (IPTE)	Used of IP mode, the interpolation time setting is incorrect

Action and Reset	
Action Condition	The 60C2 object setting does not match the synchronize cycle
Action Time	Immediately acts
Fault Treatment Parameter	N/A
Reset Method	Manual reset
Reset Condition	Correct the 60C2 object setting to match the synchronize cycle
Record	Yes
Cause	Corrective Actions
60C2 setting value is incorrect	Correct 60C2 setting.

ID	Display on LCD Keypad	Fault Name	Fault Descriptions
183	AUTO Fault IPCM IP Com Lost Sync	Interpolation command failure (IPCM)	Used for IP mode, the IP command loses synchronism
Action and Reset			
Action Condition		The 60C1 position command does not update and activates normally for more than one synchronizing cycle	
Action Time		Immediately acts	
Fault Treatment Parameter		N/A	
Reset Method		Manual reset	
Reset Condition		Immediately resets	
Record		Yes	
Cause		Corrective Actions	
The 60C1 position command does not update and activates normally for more than one synchronizing cycle		Verify if the operation time of upper control program is too long. You can prolong the synchronizing cycle.	

ID	Display on LCD Keypad	Fault Name	Fault Descriptions
184	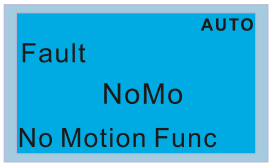	No motion control (NoMo)	Cannot use synchronization cycle command mode

Action and Reset	
Action Condition	Use synchronization command mode without EMC-MC01
Action Time	Immediately acts
Fault Treatment Parameter	N/A
Reset Method	Manual reset
Reset Condition	Immediately resets
Record	Yes
Cause	Corrective Actions
Not using EMC-MC01	Use motion control card EMC-MC01 when using synchronization cycle mode.

ID	Display on LCD Keypad	Fault Name	Fault Descriptions
185	AUTO Fault Moto Motor Code Fault	Motor code error (MoTo)	1. The detected motor code does not match the drive 2. Cannot find the motor code
Action and Reset			
Action Condition		Activates when the drive does not have the motor code	
Action Time		Immediately acts	
Fault Treatment Parameter		N/A	
Reset Method		Manual reset	
Reset Condition		Enter the correct motor code and immediately reset	
Record		Yes	
Cause		Corrective Actions	
Incorrect configuration between the motor and the drive		Choose the correct matching model.	
The drive does not have the motor code		Enter the correct motor code.	

ID	Display on LCD Keypad	Fault Name	Fault Descriptions
186	AUTO Fault DDTO D2D Timeout	D2D Timeout (DDTO)	D2D communication time-out
Action and Reset			
Action Condition	After establishing D2D communication, the communication abnormality continues when the number of communication abnormality reaches the threshold. **NOTE:** 1. Assume the AC motor drive is the D2D Master, as long as the drive has abnormal communication with any of the Slave, it is regarded as communication abnormlity. 2. The communication abnormality threshold from D2D Master station to the Slave station is 3. 3. The communication abnormality threshold from D2D Slave station to the Master station is 1. 4. The DDTO warning code only supports high-speed mode D2D communication (Pr.09-29 bit0=0) and is used with specific application 5. Specific application include: ● The double hook is enabled at the same time and being operated ● Operated the hook of the Slave machine independently under the double hook function ● Correction function is enabled		
Action Time	The action time is determined by the number of communications abnormlity threshold 1. The communication abnormality threshold from D2D Master station to the Slave station is 3. 2. The communication abnormality threshold from D2D Slave station to the Master station is 1.		
Fault Treatment Parameter	N/A		
Reset Method	Manual reset		
Reset Condition	Immediate reset after the D2D communication works normally		
Record	Yes		
Cause	Corrective Actions		
Communication abnormal	1. Verify if the communication wiring is correct. 2. Verify if the D2D communication works normally.		

ID	Display on LCD Keypad	Fault Name	Fault Descriptions
187	AUTO Fault FobF Flux Obs Fail	Flux linkage observer failure (FobF)	In PMFOB mode, when the electric feedback signal is not obvious and causing the estimated flux linkage (flux linkage estimates to 0 V/krpm) not converging to the exact flux linkage value, the calculated speed is not the exact motor speed, and then the drive stops and shows FobF.
Action and Reset			
Action Condition		When the drive is in PMFOC mode (Pr.00-11 = 6) and IF switches to FOB mode, the flux linkage estimation is ≤ 0	
Action Time		N/A	
Fault Treatment Parameter		N/A	
Reset Method		Manual reset	
Reset Condition		Immediately resets	
Record		Yes	
Cause		Corrective Actions	
IF current is too small in IF stage, or the electric signal is small when switching IF / FOB		Increase Pr.10-31 (IF current) or increase the switching frequency of IF / FOB (Pr.10-39).	
The acceleration time is too fast to drive the motor in IF mode, the motor remains stop and is driven in FOB mode when switching IF to FOB, in this case, the electric signal is not obvious, and the flux linkage easily fails		Increase acceleration time (Pr.01-12) or use the first / fourth acceleration / deceleration switching frequency (Pr.01-23) to increase the acceleration time in IF mode.	
Ke parameter is not accurate		Re-rotate and auto-tune the Ke parameter.	

ID	Display on LCD Keypad	Fault Name	Fault Descriptions
188	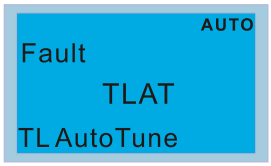	Load estimation error (TLAT)	The initial load estimation error occurs when using Explorer for ASR Auto Tune.

Action and Reset	
Action Condition	The estimated load variation cannot converge to 10% and below.
Action Time	60 seconds
Fault Treatment Parameter	N/A
Reset Method	Manual reset
Reset Condition	Immediately reset
Record	Yes
Cause	Corrective Actions
The initial load estimation cannot converge	Verify if the load is stable. It cannot estimate the inertia correctly if the load vibrates.
Initial load is too large	Increase torque command to support the load.

ID	Display on LCD Keypad	Fault Name	Fault Descriptions
189	AUTO Fault JsAT JSys AutoTune	Inertia estimation error (JsAT)	Inertia estimation is abnormal when using Explorer for ASR Auto Tune.
Action and Reset			
Action Condition	Estimated inertia variation cannot converge to 2% and below		
Action Time	60 seconds		
Fault Treatment Parameter	N/A		
Reset Method	Manual reset		
Reset Condition	Immediately resets		
Record	Yes		
Cause	Corrective Actions		
Inertia estimation cannot converge	1. Verify if the load is stable. It cannot estimate the inertia correctly if the load vibrates. 2. Increase torque command and speed command to stabilize the estimation.		

ID	Display on LCD Keypad	Fault Name	Fault Descriptions
190	AUTO Fault BWAT ASR BW AutoTune	Bandwidth estimation error (BWAT)	Other faults occur to the drive when using Explorer for ASR Auto Tune.
Action and Reset			
Action Condition	Fault occurs during ASR frequency bandwidth estimation		
Action Time	N/A		
Fault Treatment Parameter	N/A		
Reset Method	Manual reset		
Reset Condition	Immediately reset		
Record	Yes		
Cause	Corrective Actions		
The frequency bandwidth estimation is out of control	Increase torque command and speed command to stabilize the estimation.		

ID	Display on LCD Keypad	Fault Name	Fault Descriptions
191	AUTO Fault ATPF ASR AT Pos Fail	Positioning failure during estimation (ATPF)	The motor cannot operate to assigned position when using Explorer for ASR Auto Tune.
Action and Reset			
Action Condition	The speed feedback cannot decrease to 5% and below		
Action Time	5 seconds		
Fault Treatment Parameter	N/A		
Reset Method	Manual reset		
Reset Condition	Immediately reset		
Record	Yes		
Cause	Corrective Actions		
Positioning vibration during estimation	Verify if the load is stable. It cannot position successfully if the load vibrates.		

ID	Display on LCD Keypad	Fault Name	Fault Descriptions
192	AUTO Fault HmOE HomeOfst OvrFlow	Homing deviation is too large (HmOE)	Home offset overflows after matching with the gear ratio
Action and Reset			
Action Condition	Activates when the home offset overflows after matching with the gear ratio		
Action Time	Immediate acts		
Fault Treatment Parameter	N/A		
Reset Method	Manual reset		
Reset Condition	Immediate reset		
Record	Yes		
Cause	Corrective Actions		
Home offset is set incorrectly	Modify the Home Offset setting value between $\pm 2^{31}$ after multiplying the gear ratio		

ID	Display on LCD Keypad	Fault Name	Fault Descriptions
193	AUTO Fault CMTE Clr Multi Turn Err	Cleaning multi-turn data failure (CMTE)	Homing cleaning absolute encoder multi-turn data fails
Action and Reset			
Action Condition		Activates when the absolute encoder fails to clean the homing multi-turn data	
Action Time		Immediate acts	
Fault Treatment Parameter		N/A	
Reset Method		Manual reset	
Reset Condition		Immediate reset	
Record		Yes	
Cause		Corrective Actions	
Encoder is interrupted, lost or malfunction during the process		Re-execute homing function after clearing the fault. If the fault still exists, contact Delta Service.	

ID	Display on LCD Keypad	Fault Name	Fault Descriptions
195	AUTO Fault ATTv ASR BW AT Travel	ASR AT process is too short (ATTv)	When using Explorer for ASR Auto Tune, the operated process is too short for the drive to complete the frequency bandwidth estimation.

Action and Reset	
Action Condition	The set number of turns is less than the minimum operation turn
Action Time	N/A
Fault Treatment Parameter	N/A
Reset Method	Manual reset
Reset Condition	Immediate reset
Record	Yes
Cause	Corrective Actions
The operation process is too short for the drive to estimate	1. Increase torque command to increase the acceleration speed. 2. Increase the operation travel.

Chapter 15 CANopen Overview

15-1 CANopen Overview

15-2 Wiring for CANopen

15-3 CANopen Communication Interface Descriptions

15-4 CANopen Supported Index

15-5 CANopen Fault Code

15-6 CANopen LED Function

The built-in CANopen function is a kind of remote control. You can control the AC motor drive by using CANopen protocol. CANopen is a CAN-based higher layer protocol that provides standardized communication objects, including real-time data (Process Data Objects, PDO), configuration data (Service Data Objects, SDO), and special functions (Time Stamp, Sync message, and Emergency message). It also has network management data, including Boot-up message, NMT message, and Error Control message. Refer to the CiA website http://www.can-cia.org/ for details. The content of this instruction sheet may be revised without prior notice. Consult our distributors or download the most updated version at http://www.delta.com.tw/industrialautomation

Delta CANopen supporting functions:

- Supports CAN2.0A Protocol
- Supports CANopen DS301 V4.02
- Supports DS402 V2.0.

Delta CANopen supporting services:

- PDO (Process Data Objects): PDO1–PDO4
- SDO (Service Data Objects):
  Initiate SDO Download;
  Initiate SDO Upload;
  Abort SDO;
  You can use the SDO message to configure the slave node and access the Object Dictionary in every node.
- SOP (Special Object Protocol):
  Support default COB-ID in Predefined Master/Slave Connection Set in DS301 V4.02;
  Support SYNC service;
  Support Emergency service.
- NMT (Network Management):
  Support NMT module control;
  Support NMT Error control;
  Support Boot-up.

Delta CANopen not supporting service:

- Time Stamp service

15-1 CANopen Overview

CANopen Protocol

CANopen is a CAN-based higher layer protocol and was designed for motion-oriented machine control networks such as handling systems. Version 4.02 of CANopen (CiA DS301) is standardized as EN50325-4. The CANopen specifications cover the application layer and communication profile (CiA DS301), as well as a framework for programmable devices (CiA DS302), recommendations for cables and connectors (CiA DS303-1), SI units, and prefix representations (CiA DS303-2).

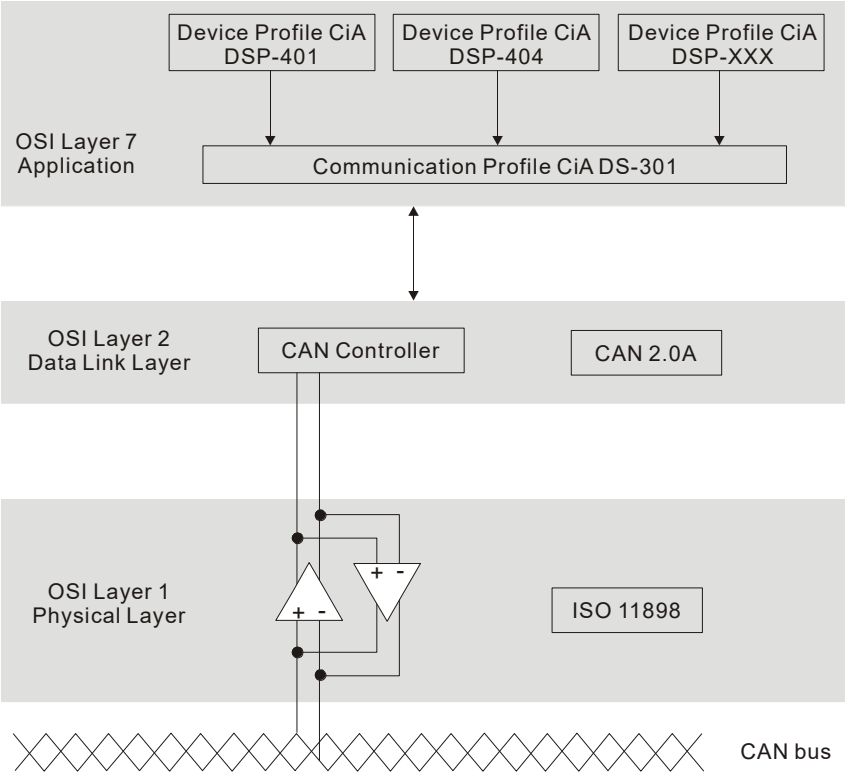

RJ45 Pin Definition

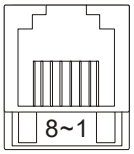

plug

PIN	Signal	Description
1	CAN_H	CAN_H bus line (dominant high)
2	CAN_L	CAN_L bus line (dominant low)
3	CAN_GND	Ground / 0V /V-
6	CAN_GND	Ground / 0V /V-

CANopen Communication Protocol

It has services as follows:

- NMT (Network Management Object)
- SDO (Service Data Objects)
- PDO (Process Data Object)
- EMCY (Emergency Object)

NMT (Network Management Object)

The Network Management (NMT) follows a Master/Slave structure for executing NMT service. A network has only one NMT master, and the other nodes are slaves. All CANopen nodes have a present NMT state, and the NMT master can control the state of the slave nodes. Following shows the state diagram of a node:

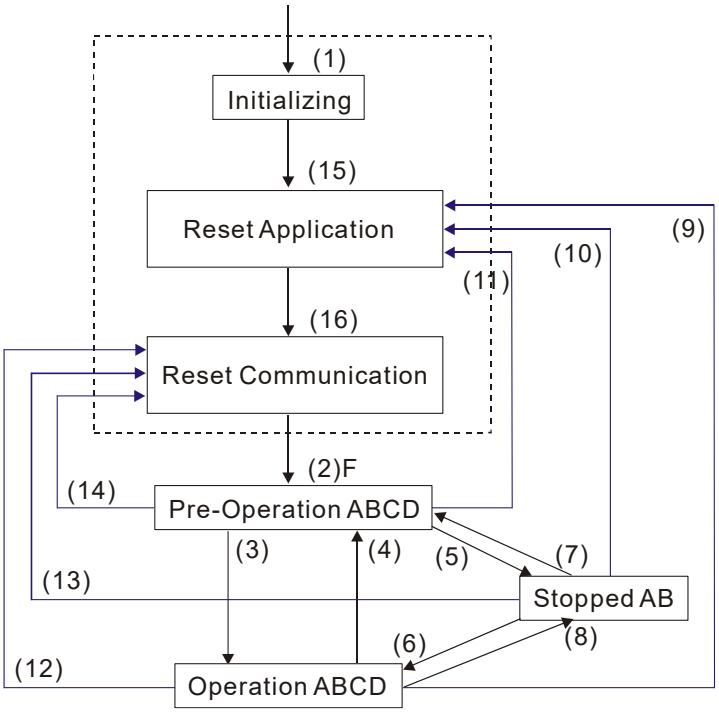

(1) After power is applied, start in the auto-initialization state
(2) Automatically enter the pre-operational state
(3) (6) Start remote node
(4) (7) Enter the pre-operational state
(5) (8) Stop remote node
(9) (10) (11) Reset node
(12) (13) (14) Reset communication
(15) Automatically enter the reset application state
(16) Automatically enter the reset communication state

A: NMT
B: Node Guard
C: SDO
D: Emergency
E: PDO
F: Boot-up

	Initializing	Pre-Operational	Operational	Stopped
PDO			○	
SDO		○	○	
SYNC		○	○	
Time Stamp		○	○	
EMCY		○	○	
Boot-up	○			
NMT		○	○	○

SDO (Service Data Objects)

Use SDO to access the Object Dictionary in every CANopen node using the Client/Server model. One SDO has two COB-IDs (request SDO and response SDO) to upload or download data between two nodes. There is no data limit for SDOs to transfer data, but it must transfer data by segment when the data exceeds four bytes with an end signal in the last segment.

The Object Dictionary (OD) is a group of objects in a CANopen node. Every node has an OD in the system, and OD contains all parameters describing the device and its network behavior. The access path in the OD is the index and sub-index; each object has a unique index in the OD and has a sub-index if necessary.

PDO (Process Data Objects)

PDO communication can be described by the producer/ consumer model. Each node of the network listens to the messages of the transmission node and distinguishes whether the message has to be processed or not after receiving the message. A PDO can be transmitted from one device to one another device or to many other devices. Every PDO has two PDO services: a TxPDO and an RxPDO. PDOs are transmitted in a non-confirmed mode. All transmission types are listed in the following table:

Type Number	PDO				
	Cyclic	Acyclic	Synchronous	Asynchronous	RTR only
0		○	○		
1–240	○		○		
241–251	Reserved				
252			○		○
253				○	○
254				○	
255				○	

- Type number 0 indicates the synchronous aperiodic message between two PDO transmissions.
- Type number 1–240 indicates the number of SYNC message between two PDO transmissions.
- Type number 252 indicates the data is updated (but not sent) immediately after receiving SYNC.
- Type number 253 indicates the data is updated immediately after receiving RTR.
- Type number 254: Delta CANopen does not support this transmission format.
- Type number 255 indicates the data is an asynchronous aperiodic transmission.

All PDO transmission data must be mapped to index via Object Dictionary.

EMCY (Emergency Object)

When errors occur inside the hardware, an emergency object is triggered. An emergency object is only sent when an error occurs. As long as there is nothing wrong with the hardware, there is no emergency object warning of an error message.

15-2 Wiring for CANopen

Use an external adapter card EMC-COP01 for CANopen wiring to connect the CANopen to the drive. The link uses a RJ45 cable. You must wire the two farthest ends with 120 Ω terminating resistors as shown in the picture below.

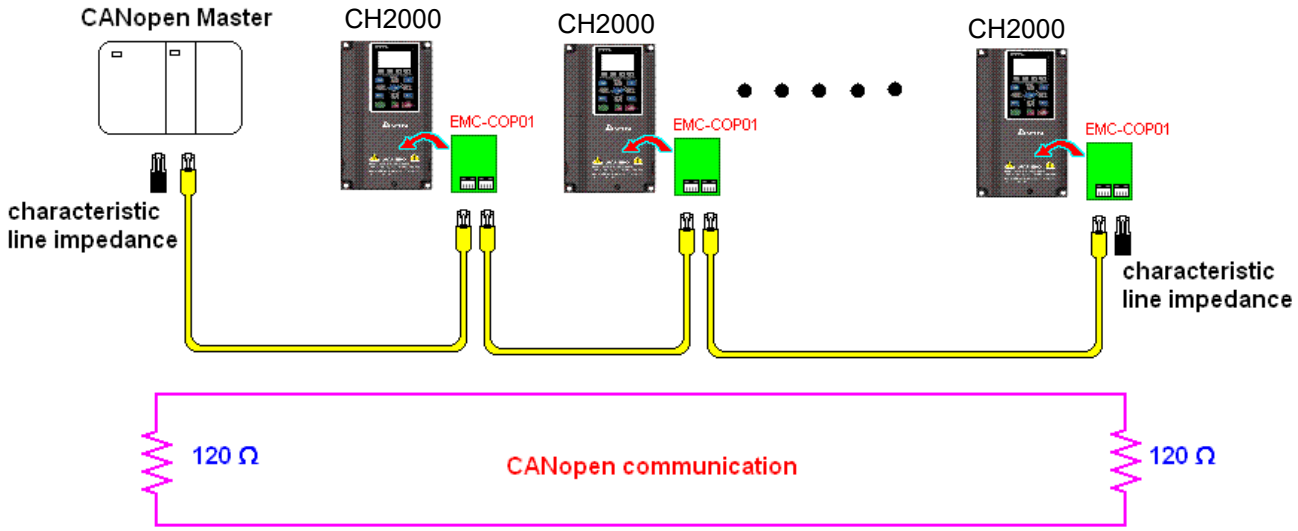

15-3 CANopen Communication Interface Descriptions

15-3-1 CANopen Control Mode Selection

There are two control modes for CANopen: the DS402 standard (Pr.09-40 set to 1) is the default, and the Delta's standard setting (Pr.09-40 set to 0). There are two control modes according to Delta's standard. One is the old control mode (Pr.09-30 = 0); this control mode can only control the motor drive under the speed control. The other mode is a new standard (Pr.09-30 = 1); this new control mode allows the motor drive to be controlled under multiple modes. The CH2000 currently supports speed, torque, position and home mode. The following table shows the control mode definitions:

CANopen Control Mode Selection	Control Mode							
	Speed		Torque		Position		Home	
	Index	Description	Index	Description	Index	Description	Index	Description
DS402 Standard Pr.09-40 = 1	6042-00	Target Rotating Speed (RPM)	6071-00	Target Torque (%)	607A-00	Target Position	-----	-----
	-----	-----	6072-00	Max. Torque Limit (%)	-----	-----	-----	-----
Delta Standard (Old definition) Pr.09-40 = 1, Pr.09-30 = 0	2020-02	Target Rotating Speed (Hz)	-----	-----	-----	-----	-----	-----
Delta Standard (New definition) Pr.09-40 = 0, Pr.09-30 = 1	2060-03	Target Rotating Speed (Hz)	2060-07	Target Torque (%)	2060-05	Target Position	-----	-----
	2060-04	Torque Limit (%)	2060-08	Speed Limit (Hz)	-----	-----	-----	-----

CANopen Control Mode Selection	Operation Control	
	Index	Description
DS402 Standard Pr.09-40 = 1	6040-00	Operation Command
	-----	-----
Delta Standard (Old definition) Pr.09-40 = 1, Pr.09-30 = 0	2020-01	Operation Command
Delta Standard (New definition) Pr.09-40 = 0, Pr.09-30 = 1	2060-01	Operation Command
	-----	-----

CANopen Control Mode Selection	Others	
	Index	Description
DS402 Standard Pr.09-40 = 1	605A-00	Quick stop processing mode
	605C-00	Disable operation processing mode
Delta Standard (Old definition) Pr.09-40 = 1, Pr.09-30 = 0	-----	-----
Delta Standard (New definition) Pr.09-40 = 0, Pr.09-30 = 1	-----	-----
	-----	-----

You can use some indices in either DS402 or Delta's standard.

For example:

1. Indices that are defined as RO attributes.
2. The corresponding index of available parameter groups: (2000-00–200B-XX)
3. Acceleration / Deceleration Index: 604F 6050

15-3-2 DS402 Standard Control Mode

15-3-2-1 Related settings for an AC motor drive (following the DS402 standard)

If you want to use the DS402 standard to control the motor drive, follow these steps:

1. Wire the hardware (refer to Section 15-2 Wiring for CANopen)
2. Set the operation source: set Pr.00-21 to 3 for CANopen communication card control. (Run/ stop, forward/ reverse run…etc.)
3. Set the frequency source: set Pr.00-20 to 6. Choose the source for the Frequency command from the CANopen setting.
4. Set the torque source: set Pr.11-33. Choose the source for the Torque command from the CANopen setting.
5. Set the position source: set Pr.11-40. Choose the source for the Position command from the CANopen setting.
6. Set DS402 as the control mode: Pr.09-40=1
7. Set the CANopen station: set Pr.09-36; the range is among 1–127. When Pr.09-36 = 0, the CANopen slave function is disabled. Note that if an error appears (station address error CAdE or CANopen memory error CFrE) when you finish the station setting, set Pr.00-02 = 7 to reset.
8. Set the CANopen baud rate: set Pr.09-37 (CANBUS Baud Rate: 1 Mbps (0), 500 Kbps (1), 250 Kbps (2), 125 Kbps (3), 100 Kbps (4) and 50 Kbps (5))
9. Set the multiple input functions to Quick Stop. You can also choose enable or disable; the default setting is disabled. If it is necessary to enable the function, set MI terminal to 53 in one of the following parameters: Pr.02.01–Pr.02.08 or Pr.02.26–Pr.02.31. (**NOTE**: This function is available in DS402 only.)

15-3-2-2 The status of the motor drive (following the DS402 standard)

According to the DS402 definition, the motor drive is divided into 3 blocks and 9 statuses as described below.

3 blocks

- Power Disable: without PWM output
- Power Enable: with PWM output
- Fault: One or more errors have occurred.

9 statuses

- Start: Power On
- Not ready to switch on: the motor drive is initiating.
- Switch On Disable: occurs when the motor drive finishes initiating.
- Ready to Switch On: warming up before running.
- Switch On: the motor drive has the PWM output, but the reference command is not effective.
- Operation Enable: able to control normally.
- Quick Stop Active: when there is a Quick Stop request, stop running the motor drive.
- Fault Reaction Active: the motor drive detects conditions that might trigger error(s).
- Fault: One or more errors have occurred in the motor drive.

When the motor drive turns on and finishes the initiation, it remains in Ready to Switch On status. To control the operation of the motor drive, change to Operation Enable status. To do this, set the control word's bit0–bit3 and bit7 of the Index 6040H and pair with Index Status Word (Status Word 0X6041). The control steps and index definition are described below.

Index 6040

15–9	8	7	6~4	3	2	1	0
Reserved	Halt	Fault Reset	Operation	Enable operation	Quick Stop	Enable Voltage	Switch On

Index 6041

15–14	13–12	11	10	9	8	7	6	5	4	3	2	1	0
Reserved	Operation	Internal limit active	Target reached	Remote	Reserved	Warning	Switch on disabled	Quick stop	Voltage enabled	Fault	Operation enable	Switch on	Ready to switch on

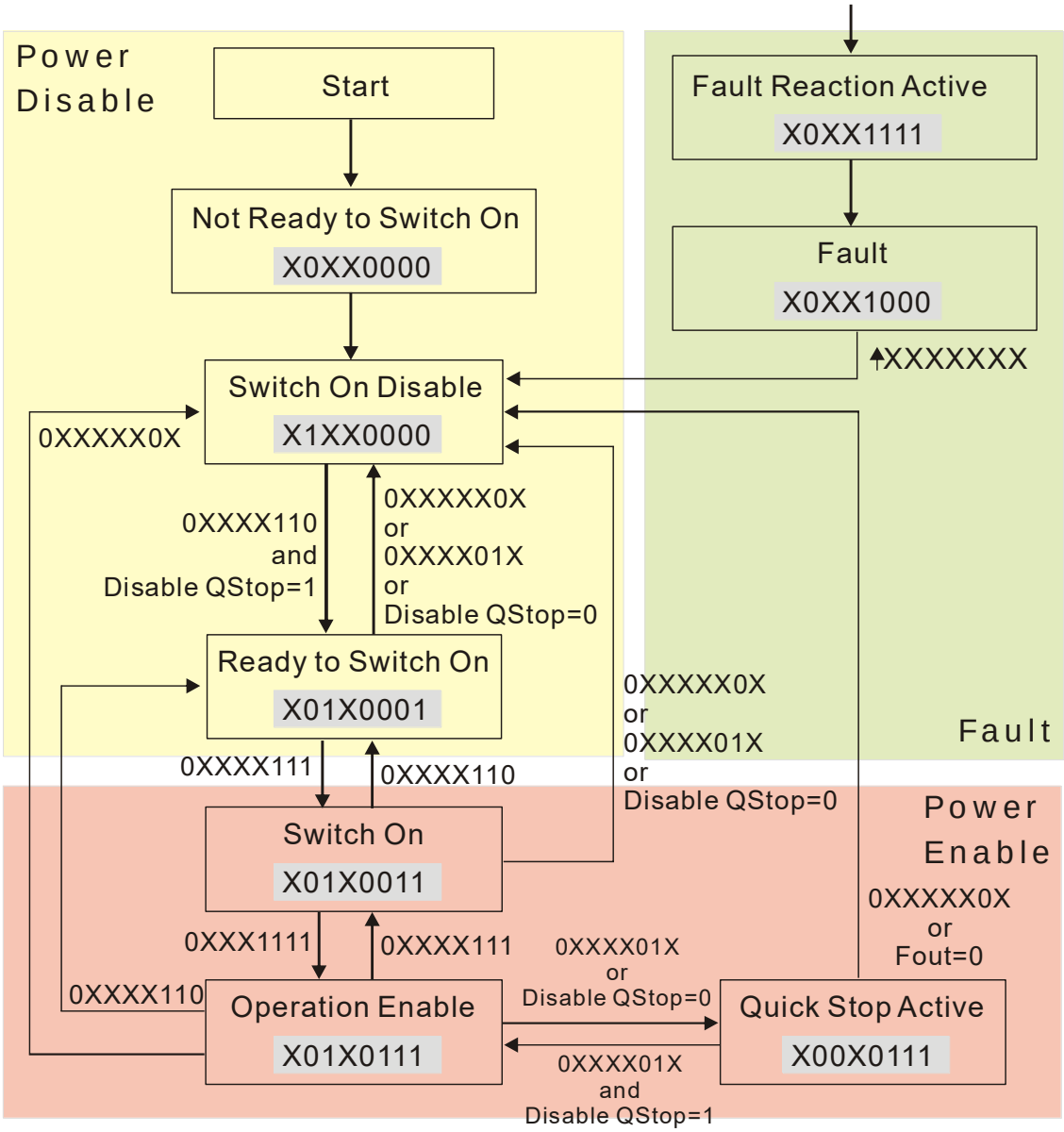

Set command 6040 = 0xE, and then set another command 6040 = 0xF. Then you can switch the motor drive to Operation Enable. The Index 605A determines the lines from Operation Enable when the control mode changes from Quick Stop Active. When the setting value is 1–3, both direction lines are active, but when the setting value of 605A is not 1–3, once the motor drive is switched to Quick Stop Active, it is not able to switch back to Operation Enable.)

Index	Sub	Definition	Default	R/W	Size	Unit	PDO Map	Mode	note
605Ah	0	Quick stop option code	2	RW	S16		No		0: Disable drive function 1: Slow down on slow down ramp 2: Slow down on quick stop ramp 5: Slow down on slow down ramp and stay in QUICK STOP 6: Slow down on quick stop ramp and stay in QUICK STOP 7: Slow down on the current limit and stay in Quick stop

When the control block switches from Power Enable to Power Disable, use 605C to define the stop method.

Index	Sub	Definition	Default	R/W	Size	Unit	PDO Map	Mode	note
605Ch	0	Disable operation option code	1	RW	S16		No		0: Disable drive function 1: Slow down with slow down ramp; disable the drive function

15-3-2-3 Various mode control method (following the DS402 standard)

The control mode of CH2000 currently supports speed, torque, position and home control, and are described as below:

Speed Mode

1. Set CH2000 to speed control mode: set Index 6060 to 2.
2. (The Index 6071 is available for torque limit under the speed control mode)
3. Switch to Operation Enable mode: set 6040 = 0xE, and then set 6040 = 0xF.
4. Set the target frequency: Set target frequency of 6042. Since the operation unit of 6042 is rpm, a conversion is required:

   $$n = f \times \frac{120}{p}$$

   n: rotation speed (rpm) (revolutions /minute)
   p: number of poles of the motor (Pole)
   f: rotation frequency (Hz)

   For example:
   Set 6042H = 1500 (rpm), if the number of poles for the drive is 4 (Pr.05-04 or Pr.05-16), then the motor drive's operation frequency is 1500/(120/4) = 50 Hz. The 6042 is defined as a signed operation. The plus or minus sign means to rotate clockwise or counter-clockwise
5. To set acceleration and deceleration: Use 604F (Acceleration) and 6050 (Deceleration).
6. Trigger an ACK signal: in the speed control mode, control the bit 6–4 of Index 6040. It is defined as below:

	Index 6040			Result
	bit 6	bit 5	bit 4	
Speed mode (Index 6060=2)	1	0	1	Locked at the current frequency.
	1	1	1	Run to reach the target frequency.
	Other			Decelerating to 0Hz.

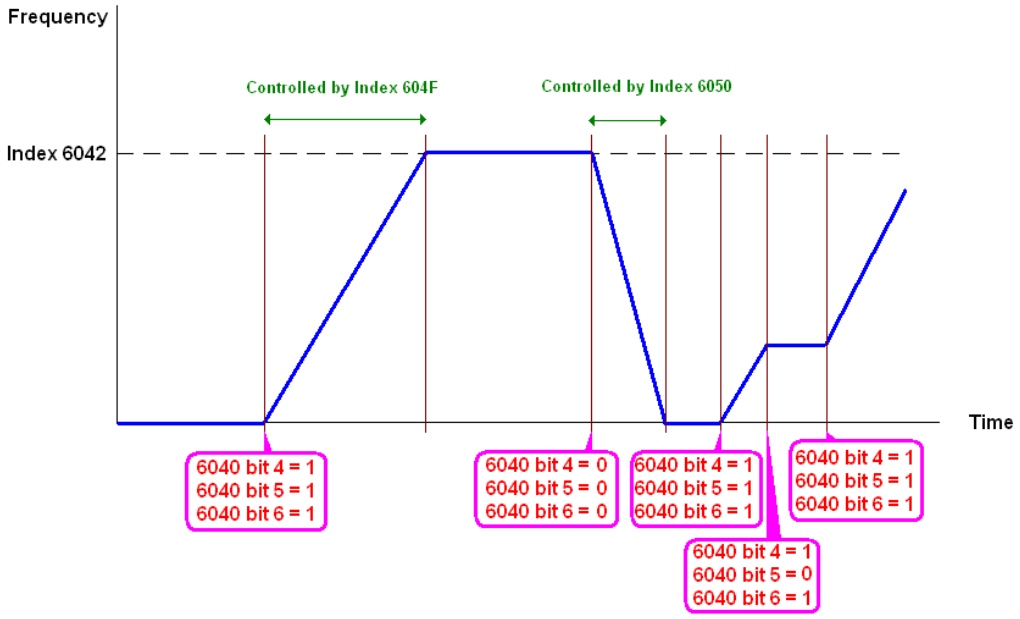

NOTE:

1. Read 6043 to get the current rotation speed. (Unit: rpm)
2. Read bit 10 of 6041 to check if the rotation speed has reached the targeting value. (0: Not reached; 1: Reached)

Torque Mode

1. Set AC motor drive to the torque mode: set Index 6060 = 4.
   (The Index 6042 is available for speed limit under the torque control mode)
2. Switch to Operation Enable mode: set 6040 = 0xE, and then set 6040 = 0xF.
3. To set targeting torque: set 6071 as targeting torque and 6072 as the largest output torque.

Torque mode (Index 6060=4)	Index 6040			SUM
	bit6	bit5	bit4	
	X	X	X	RUN to reach the targeting torque.

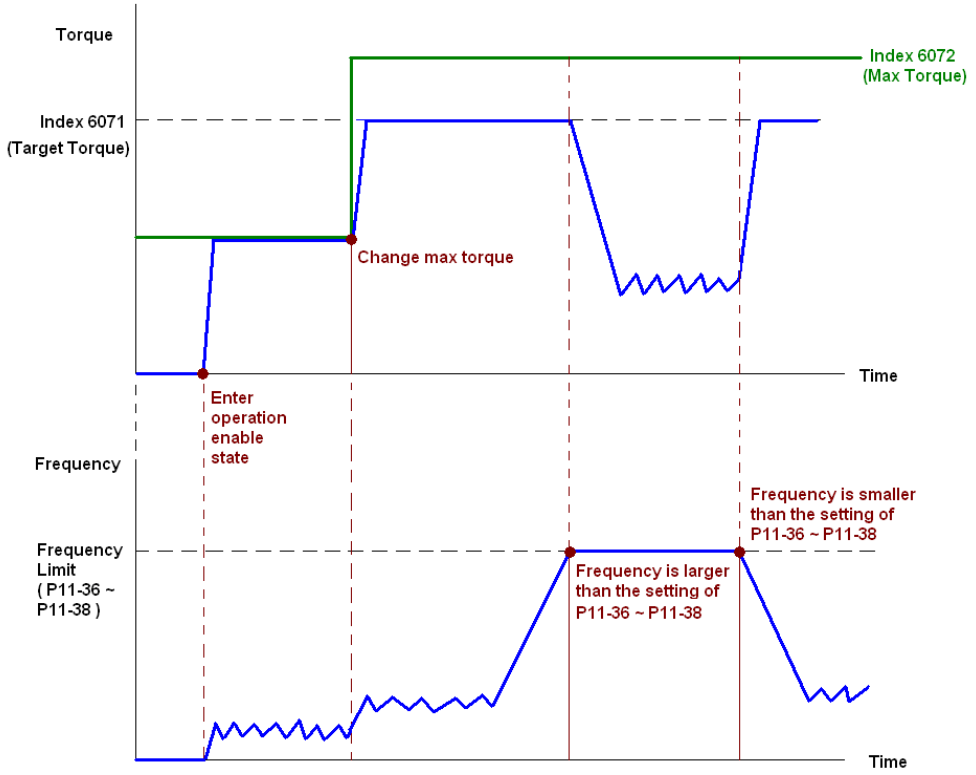

NOTE:

1. The standard DS402 does not regulate the maximum speed limit. Therefore, if the motor drive defines the control mode of DS402, the highest speed will go with the setting of Pr.11-36 to Pr.11-38.
2. Read 6077 to get the current torque. (Unit: 0.1%).
3. Read bit10 of 6041 to find if the torque has reached the targeting value. (0: Not reached; 1: Reached)

Position Mode

1. Set the parameter of a trapezium curve to define position control (Pr.11-43 Max. Frequency of Point-to-Point Position Control, Pr.11-44 Accel. Time of Point-to-Point Position Control and Pr.11-45 Decel. Time of Point-to-Point Position Control)
2. Set CH2000 to position control mode: set Index 6060 = 1.
3. Switch to Operation Enable mode: set 6040 = 0xE, and then set 6040 = 0xF.
4. Set targeting position: set 607A as the targeting position.
5. Trigger an ACK signal: set 6040 = 0x0F, and then set 6040 = 0x1F. (Pulse On).

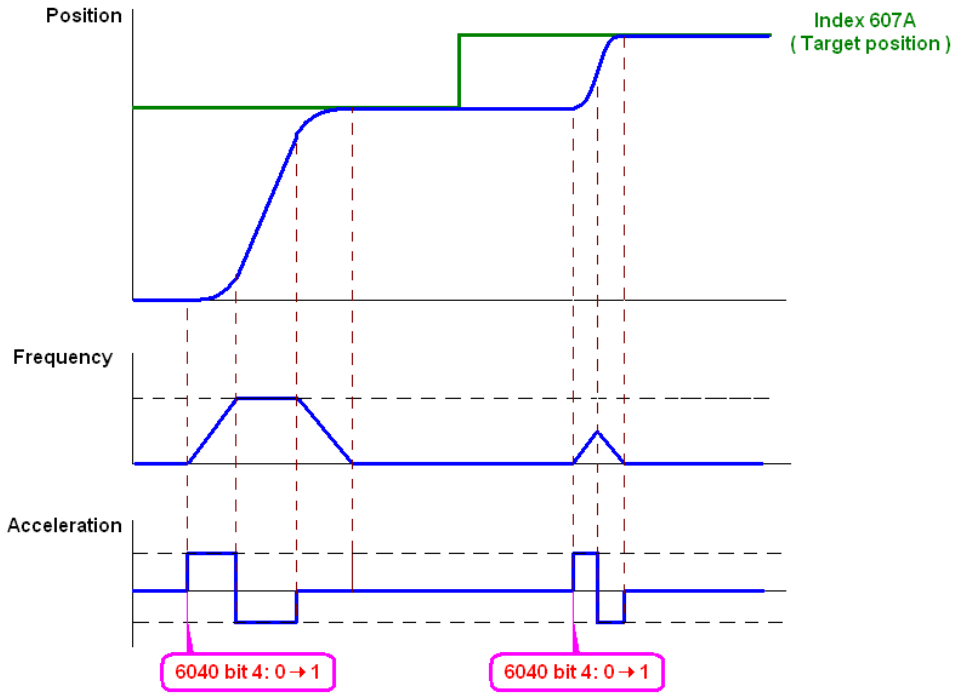

NOTE:

1. Read 6064 to get the current position.
2. Read bit10 of 6041 to find if the position reaches the targeting position. (0: Not reached, 1: reached)
3. Read bit11 of 6041 to find if the position is over the limited area. (0: in the limit, 1: over the limit)

Home Mode

1. Set Pr.11-68 = 0–12 to choose a home method.
2. Set the left and right limits correspond to the position of MI terminal.
3. Switch to Home mode: set Index 6060 = 6.
4. Switch to Operation Enable mode: set 6040 = 0xE, and then set 6040 = 0xF.
5. To trigger an ACK signal: set 6040 = 0x0F, and then set 6040 = 0x1F (Pulse On, and the motor drive will be back to home.)

NOTE: Read bit12 of 6041 to find if the home mode is completed. (0: Not reached, 1: reached)

15-3-3 Using the Delta Standard (Old definition, only supports speed mode)

15-3-3-1 Various mode control method (following the Delta old standard)

If you want to use the Delta old standard to control the motor drive, follow these steps:

1. Wire the hardware (refer to Section 15-2 Wiring for CANopen).
2. Set the operation source: set Pr.00-21 to 3 for CANopen communication card control. (Run/ stop, Forward/ reverse run…., etc.)
3. Set the frequency source: set Pr.00-20 to 6. Choose source for the Frequency command from the CANopen setting.
4. Set Delta Standard (Old definition, only supports speed mode) as the control mode: Pr.09-40 = 0 and Pr.09-30 = 0.
5. Set the CANopen station: set Pr.09-36; the range is among 1–127. When Pr.09-36 = 0, the CANopen slave function is disabled. Note: If an error appears (station address error CAdE or CANopen memory error CFrE) when you finish the station setting, set Pr.00-02 = 7 to reset.
6. Set the CANopen baud rate: set Pr.09-37 (CANBUS Baud Rate: 1 Mbps(0), 500 Kbps(1), 250 Kbps(2), 125 Kbps(3), 100 Kbps(4) and 50 Kbps(5))

15-3-3-2 The control method under speed mode

1. Set the target frequency: set 2020-02, the unit is Hz, with 2 decimal places. For example, 1000 is 10.00Hz.
2. Operation control: set 2020-01 = 0002H for running, and set 2020-01 = 0001H for stopping.

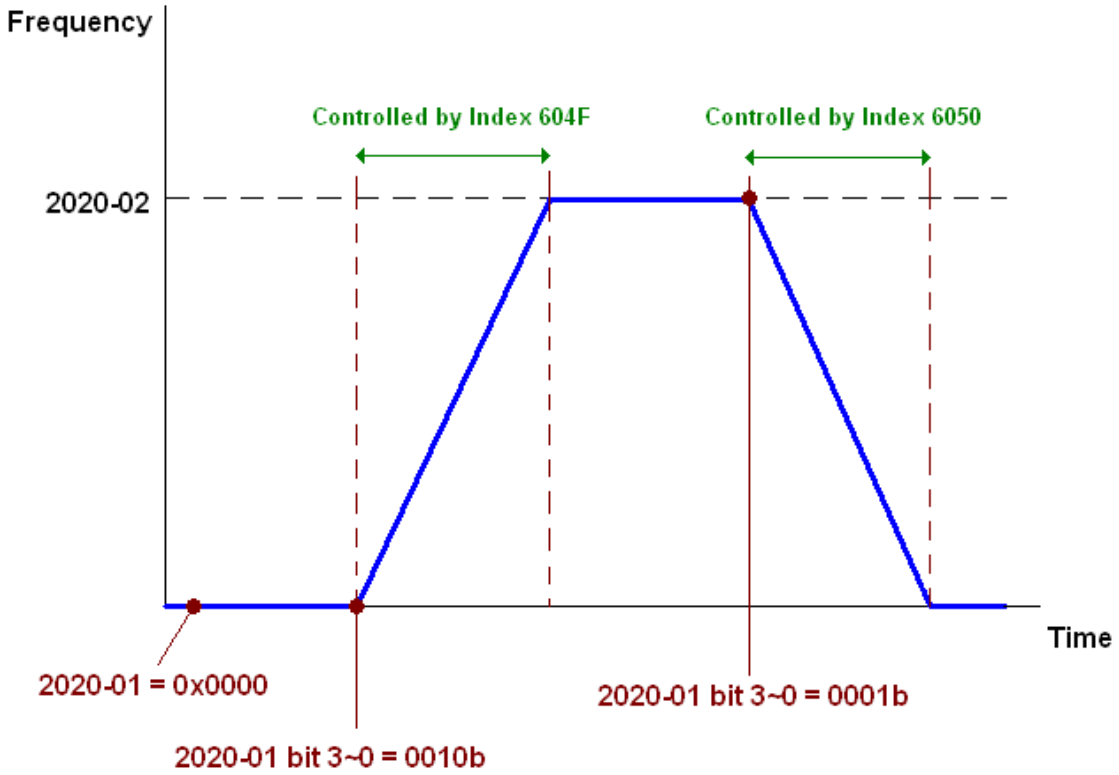

15-3-4 By Using Delta Standard (New Definition)

15-3-4-1 Related settings for an AC motor drive (Delta New Standard)

If you want to use the Delta new standard to control the motor drive, follow these steps:

1. Wire the hardware (refer to Section 15-2 Wiring for CANopen).
2. Set the operation source: set Pr.00-21 to 3 for CANopen communication card control. (Run / stop, Forward / reverse run…., etc.)
3. Set the frequency source: set Pr.00-20 to 6. Choose the source of the Frequency Command from CANopen setting.
4. Set the torque source: set Pr.11-33. Choose the source of the Torque Command from CANopen setting.)
5. Set the position source: set Pr.11-40 = 3. Choose the source of the Position Command from CANopen setting.)
6. Set Delta Standard (New definition) as the control mode: Pr.09-40 = 0 and Pr.09-30 = 0.
7. Set the CANopen station: set Pr.09-36; the range is among 1–127. When Pr.09-36 = 0, the CANopen slave function is disabled. (**NOTE**: If an error appears (station address error CAdE or CANopen memory error CFrE) when you finish the station setting, set Pr.00-02 = 7 to reset.
8. Set the CANopen baud rate: set Pr.09-37 (CANBUS Baud Rate: 1 Mbps (0), 500 Kbps (1), 250 Kbps (2), 125 Kbps (3), 100 Kbps (4) and 50 Kbps (5))

15-3-4-2 Various mode control method (Delta New Standard)

Speed Mode

1. Set CH2000 to speed control mode: set Index6060 = 2.
2. Set the target frequency: set 2060-03, unit is Hz, with 2 decimal places. For example, 1000 is 10.00Hz.
3. Operation control: set 2060-01 = 008H for Server on and set 2060-01 = 0081H for running.

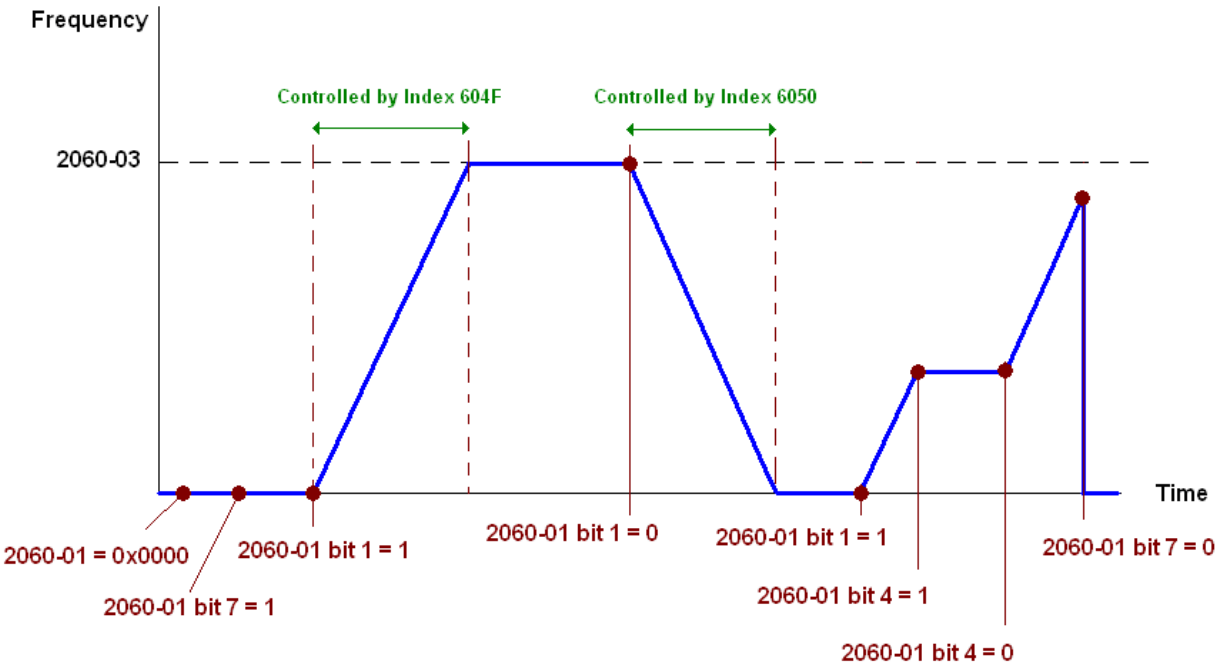

Torque Mode

1. Set CH2000 to torque control mode: set Index 6060 = 4.
2. Set the target torque: set 2060-07, unit as %, and the value is one decimal place. For example, 100 is 10.0%.
3. Operation control: set 2060-01 = 0080H starts excitation, and the drive immediately runs at the target torque.

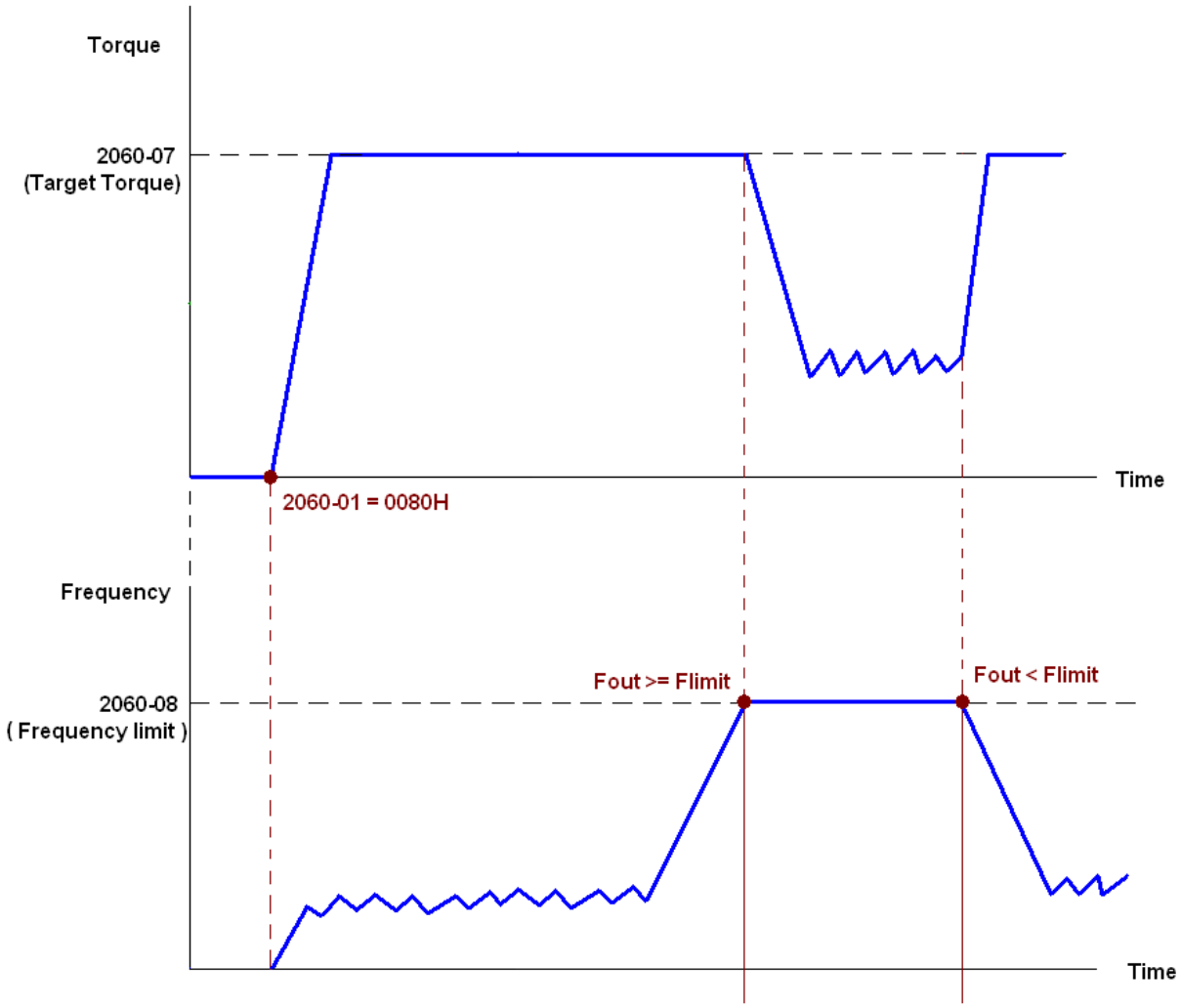

NOTE:

1. Read 2061-07 for the current torque (unit is 0.1%).
2. Read bit0 of 2061-01 to find if the torque has reached the set value (0: Not reached, 1: Reached).
3. If the speed of the drive reaches the speed limit when torque outputs, you may reduce the output torque in order to ensure that the speed stays within the limits.

Position Mode

1. Set the parameter of a trapezium curve to define position control (Pr.11-43 Max. Position Control Frequency), Pr.11-44 Accel. Time of Position Control, Pr.11-45 Decel. Time of Position Control)
2. Set C2000 to position control mode, set Index 6060 = 1.
3. Set 2060-01 = 0080h, then motor drive starts excitation.
4. Set target position: set 2060-05 = target position.
5. Set 2060-01 =0081h to trigger the motor drive runs to the target position.
6. Repeat step 3 to step 5 to move to another position.

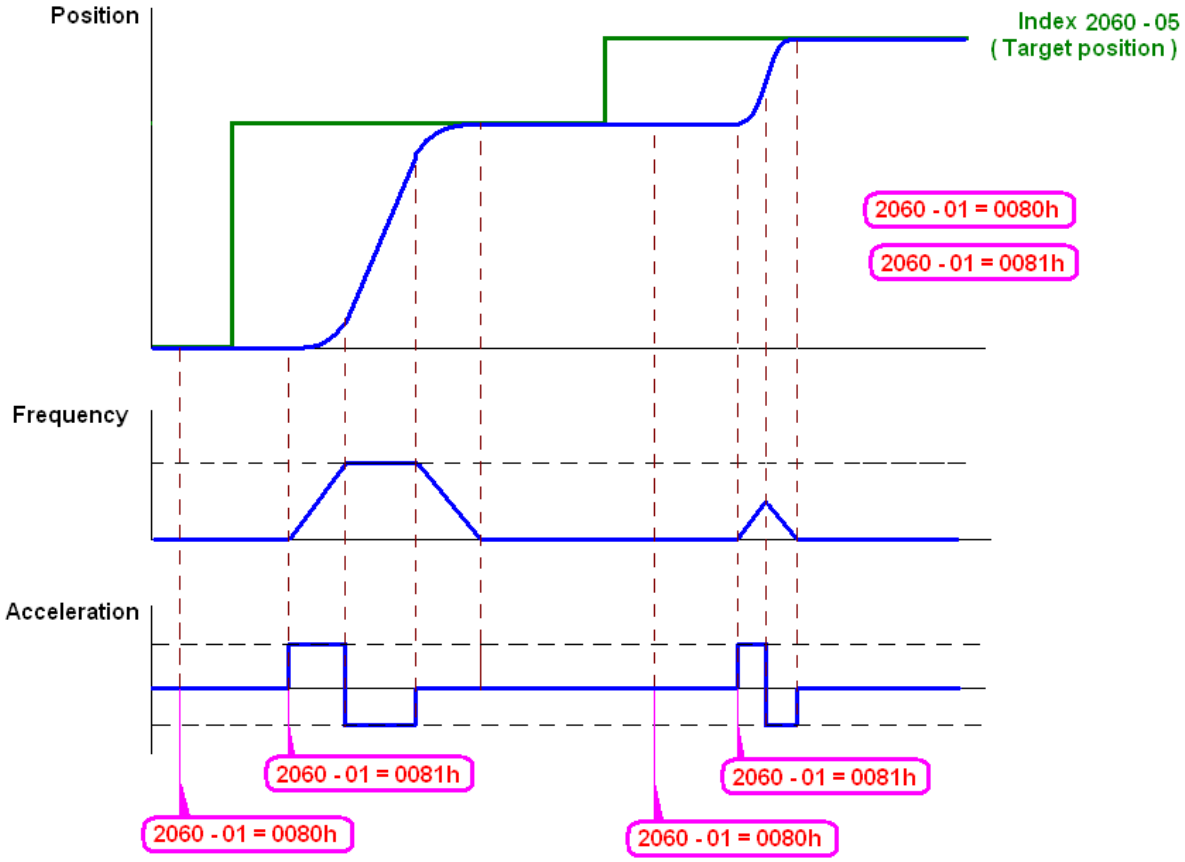

NOTE:

1. Read 2061-05 to get the current position.
2. Read bit0 of 2061 to find if the position has reached to the target position. (0: Not reached, 1: Reached).

Home Mode

1. Set Pr.11-68 = 0–12 to choose the method to return home.
2. Set the left and right limits correspond to the position of MI terminal.
3. Switch to home mode: set Index 6060 = 6.
4. Set 2060-01 = 0080h, then the motor drive starts excitation.
5. Set the ACK signal: set 2060-01 = 0081h, then the motor drive starts to go back home.

NOTE: Read bit12 of 6041 to find if returning home is completed. (0: Not reached, 1: Reached).

15-3-5 Control DI / DO / AI / AO through CANopen

To control the DO and AO of the motor drive through CANopen, follow the steps below:

1. Define the DO to be controlled by CANopen. For example, set Pr.02-14 to control RY2.
2. Define the AO to be controlled by CANopen. For example, set Pr.03-23 to control AFM2.
3. Control the Index mapped by CANopen. To control DO, use control index 2026-41. To control AO, you will need to control 2026-AX. To set RY2 as ON, set bit1 of Index 2026-41 =1, then RY2 outputs 1. To control AFM2 output = 50.00%, set Index 2026-A2 =5000, then AFM2 outputs 50%.

The following table shows the mapping of CANopen DI / DO / AI / AO:

DI:

Terminal	Related Parameters	R/W	Mapping Index
FWD	==	RO	2026-01 bit0
REV	==	RO	2026-01 bit1
MI1	==	RO	2026-01 bit2
MI2	==	RO	2026-01 bit3
MI3	==	RO	2026-01 bit4
MI4	==	RO	2026-01 bit5
MI5	==	RO	2026-01 bit6
MI6	==	RO	2026-01 bit7
MI7	==	RO	2026-01 bit8
MI8	==	RO	2026-01 bit9
MI10	==	RO	2026-01 bit10
MI11	==	RO	2026-01 bit11
MI12	==	RO	2026-01 bit12
MI13	==	RO	2026-01 bit13
MI14	==	RO	2026-01 bit14
MI15	==	RO	2026-01 bit15

DO:

Terminal	Related Parameters	R/W	Mapping Index
RY1	Pr.02-13 = 50	RW	2026-41 bit0
RY2	Pr.02-14 = 50	RW	2026-41 bit1
MO1	Pr.02-16 = 50	RW	2026-41 bit3
MO2	Pr.02-17 = 50	RW	2026-41 bit4
MO10	Pr.02-36 = 50	RW	2026-41 bit5
RY10			2026-41 bit5
MO11	Pr.02-37 = 50	RW	2026-41 bit6
RY11			2026-41 bit6
RY12	Pr.02-38 = 50	RW	2026-41 bit7
RY13	Pr.02-39 = 50	RW	2026-41 bit8
RY14	Pr.02-40 = 50	RW	2026-41 bit9
RY15	Pr.02-41 = 50	RW	2026-41 bit10

AI:

Terminal	Related Parameters	R/W	Mapping Index
AVI	==	RO	Value of 2026-61
ACI	==	RO	Value of 2026-62
AUI	==	RO	Value of 2026-63

AO:

Terminal	Related Parameters	R/W	Mapping Index
AFM1	Pr.03-20 = 20	RW	Value of 2026-A1
AFM2	Pr.03-23 = 20	RW	Value of 2026-A2

15-4 CANopen Supported Index

CH2000 Supported Parameter Index:

The parameter index corresponds as shown in this example:

Index	**sub-Index**
2000H + Group	number+1

For example:

Pr.10-15 (Encoder Stall and Slip Error Action)

Group		**number**
10(0AH)	-	15(0FH)

Index = 2000H + 0AH = 200A

Sub Index = 0FH + 1H = 10H

CH2000 Supported Control Index:

Delta Standard Mode (Old Definition)

Index	Sub	Definition	Default	R/W	Size	Note	
2020H	0	Number	3	R	U8		
	1	Control word	0	RW	U16	bit1–0	00B: Disable
							01B: Stop
							10B: Disable
							11B: JOG Enable
						bit3–2	Reserved
						bit5–4	00B:disable
							01B: Direction forward
							10B: Reverse
							11B: Switch Direction
						bit7–6	00B: 1st step Accel. /Decel.
							01B: 2nd step Accel. /Decel.
							10B: 3rd step Accel. /Decel.
							11B: 4th step Accel. /Decel.
						bit11–8	0000B: Master speed
							0001B: 1st step speed
							0010B: 2nd step speed
							0011B: 3rd step speed
							0100B: 4th step speed
							0101B: 5th step speed
							0110B: 6th step speed
							0111B: 7th step speed
							1000B: 8th step speed
							1001B: 9th step speed
							1010B: 10th step speed
							1011B: 11th step speed
							1100B: 12th step speed
							1101B: 13th step speed
							1110B: 14th step speed
							1111B: 15th step speed
						bit12	1: Enable the function of bit6-11
						bit 15	Reserved
	2	Freq. command (XXX.XXHz)	0	RW	U16		
	3	Other trigger	0	RW	U16	bit0	1: E.F. ON
						bit1	1: Reset
						bit2	1: Base Block (B.B) ON

Index	Sub	Definition	Default	R/W	Size	Note	
						bit15–3	Reserved
2021H	0	Number	10	R	U8		
	1	Error code	0	R	U16	High byte: Warning Code Low byte: Error Code	
	2	AC motor drive status	0	R	U16	bit1–0	00B: stop
							01B: decelerate to stop
							10B: waiting for operation command
							11B: in operation
						bit2	1: JOG command
						bit4–3	00B: Run forward
							01B: switch from run in reverse to run forward
							10B: switch from run forward to run in reverse
							11B: Run in reverse
						bit7–5	Reserved
						bit8	1: Master Frequency command controlled by communication interface
						bit9	1: Master Frequency command controlled by analog signal input
						bit10	1: Operation command controlled by communication interface
						bit11	1: Parameter lock
						bit12	1: Enable the digital keypad copy parameter function
						bit15–13	Reserved
	3	Freq. command (XXX.XXHz)	0	R	U16		
	4	Output freq. (XXX.XXHz)	0	R	U16		
	5	Output current (XX.XA)	0	R	U16		
	6	DC bus voltage (XXX.XV)	0	R	U16		
	7	Output voltage (XXX.XV)	0	R	U16		
	8	The current step run by the multi- step speed commend	0	R	U16		
	9	Reserved	0	R	U16		
	A	Display counter value（c）	0	R	U16		
	B	Display output power factor angle (XX.X°)	0	R	U16		
	C	Display output torque (XXX.X%)	0	R	U16		
	D	Display actual motor speed (rpm)	0	R	U16		
	E	Number of PG feedback pulses (0–65535)	0	R	U16		
	F	Number of PG2 pulse commands (0–65535)	0	R	U16		
	10	Power output (X.XXXkWh)	0	R	U16		
	17	Multi-function display (Pr.00-04)	0	R	U16		
2022H	0	Reserved	0	R	U16		
	1	Display the drive's output current	0	R	U16		
	2	Counter value	0	R	U16		
	3	Actual output frequency (XXX.XXHz)	0	R	U16		
	4	DC bus voltage (XXX.XV)	0	R	U16		
	5	Output voltage (XXX.XV)	0	R	U16		
	6	Power factor angle (XX.X°)	0	R	U16		

Index	Sub	Definition	Default	R/W	Size	Note
	7	Display the output power of U, V, W in kW	0	R	U16	
	8	Display the motor speed estimated by the drive or encoder feedback in rpm	0	R	U16	
	9	Display the positive / negative output torque estimated by the drive (+0.0: positive torque; -0.0: negative torque)	0	R	U16	
	A	Display PG feedback	0	R	U16	
	B	Display the PID feedback value after enabling PID function in %	0	R	U16	
	C	Display the AVI analog input terminal signal, 0–10 V corresponds to 0.00–100.00% (see Explanation 2 in Pr.00-04)	0	R	U16	
	D	Display the ACI analog input terminal signal, 4–20 mA / 0–10 V corresponds to 0–100% (2.) (see Explanation 2 in Pr.00-04)	0	R	U16	
	E	Display the AUI analog input terminal signal, -10–10V corresponds to -100–100% (see Explanation 2 in Pr.00-04)	0	R	U16	
	F	IGBT temperature of the power module in °C	0	R	U16	
	10	Display the temperature of capacitance in °C	0	R	U16	
	11	The digital input status (ON / OFF), refer to Pr.02-12 (see Explanation 3 in Pr.00-04)	0	R	U16	
	12	The digital output status (ON / OFF), refer to Pr.02-18 (see Explanation 4 in Pr.00-04)	0	R	U16	
	13	Current step for the multi-step speed operation	0	R	U16	
	14	The corresponding CPU digital input pin status (d.) (see Explanation 3 in Pr.00-04)	0	R	U16	
	15	The corresponding CPU digital output pin status (O.) (see Explanation 4 in Pr.00-04)	0	R	U16	
	16	Number of actual motor revolutions (PG1 of PG card). Starts from 9 when the actual operation direction is changed, or the keypad display at stop is 0. Max. is 65535	0	R	U16	
	17	Pulse input frequency (PG2 of the PG card)	0	R	U16	

Index	Sub	Definition	Default	R/W	Size	Note
	18	Pulse input position (PG card PG2), maximum setting is 65535.	0	R	U16	
	19	Position command tracing error	0	R	U16	
	1A	Counter value of overload (0.00–100.00%)	0	R	U16	
	1B	Display GFF in %	0	R	U16	
	1C	Display DC bus voltage ripples (Unit: V_{DC})	0	R	U16	
	1D	PLC register D1043 data	0	R	U16	
	1E	Magnetic field area of the synchronous motor	0	R	U16	
	1F	User page displays the value in physical measure	0	R	U16	
	20	Output Value of Pr.00-05	0	R	U16	
	21	Number of motor turns when drive operates	0	R	U16	
	22	Operation position of motor	0	R	U16	
	23	Fan speed of the drive	0	R	U16	
	24	Control mode of the drive 0: speed mode 1: torque mode	0	R	U16	
	25	Carrier frequency of the drive	0	R	U16	
	26	Reserved				
	27	Motor status				
	28	Output positive/ negative torque of motor drive calculation				
	29	Torque command				
	2A	kWh display				
	2B	PG2 pulse input low-word				
	2C	PG2 pulse input high-word				
	2D	Motor actual position low-word				
	2E	Motor actual position high-word				
	2F	PID target value				
	30	PID offset				
	31	PID output frequency				

CANopen Remote IO Mapping

Index	Sub	R/W	Definition
2026H	01h	R	Each bit corresponds to the different input terminals
	02h	R	Each bit corresponds to the different input terminals
	03h–40h	R	Reserved
	41h	RW	Each bit corresponds to the different output terminals
	42h–60h	R	Reserved
	61h	R	AVI proportional value (%)
	62h	R	ACI proportional value (%)
	63h	R	AUI proportional value (%)
	64h–6Ah	R	Reserved
	6Bh	R	Extension card AI10, 0.0–100.0% (EMC-A22A)
	6Ch	R	Extension card AI11, 0.0–100.0% (EMC-A22A)
	6Dh–A0h	R	Reserved
	A1h	RW	AFM1 output proportional value (%)
	A2h	RW	AFM2 output proportional value (%)
	A3h–AAh	RW	Reserved
	ABh	RW	Extension card AO10, 0.0–100.0% (EMC-A22A)
	ACh	RW	Extension card AO11, 0.0–100.0% (EMC-A22A)

Index 2026-01	bit0	bit1	bit2	bit3	bit4	bit5	bit6	bit7	bit8	bit9	bit10	bit11	bit12	bit13	bit14	bit15
1	FWD	REV	MI1	MI2	MI3	MI4	MI5	MI6	MI7	MI8						
2											MI10	MI11	MI12	MI13	MI14	MI15
3											MI10	MI11	MI12	MI13		

1: Control broad I/O (Standard)

2: Add external card, EMC-D611A

3: Add external card, EMC-D42A

Index 2026-41	bit0	bit1	bit2	bit3	bit4	bit5	bit6	bit7	bit8	bit9	bit10	bit11	bit12	bit13	bit14	bit15
1	RY1	RY2		MO1	MO2											
2						MO10	MO11									
3						RY10	RY11	RY12	RY13	RY14	RY15					

1: Control broad I/O (Standard)

2: Add external card, EMC-D42A

3: Add external card, EMC-R6AA

Delta Standard Mode (New Definition)

Index	sub	R/W	Size	Descriptions			Speed Mode	Position Mode	Home Mode	Torque Mode
				bit	Definition	Priority				
2060h	00h	R	U8						0: Stop Homing	
	01h	RW	U16	0	Ack	4	0: fcmd =0 1: fcmd = Fset(Fpid)	Pulse 1: Position control	Pulse 1: Return to home	
				1	Dir	4	0: FWD run command 1: REV run command			
				2				0: Relative move 1: Absolute move		
				3	Halt	3	0: drive run till target speed is attained 1: drive stop by deceleration setting			The torque target of internal decoding is set as 0, but the display of outside torque target will remain its outside setting.
				4	Hold	4	0: drive run till target speed is attained 1: frequency stop at current frequency			
				5	JOG	4	0: JOG OFF Pulse 1: JOG RUN			
				6	Qstop	2	Quick Stop	Quick Stop	Quick Stop	Quick Stop
				7	Power	1	0: Power OFF 1: Power ON	0: Power OFF 1: Power ON	0: Power OFF 1: Power ON	0: Power OFF 1: Power ON
				8	Reserved					
				9	Ext Cmd2	4	0→1: Absolute position cleared	0->1: Absolute position cleared	0->1: Absolute position cleared	0->1: Absolute position cleared
				10–14	Reserved					
				15	RST		Pulse 1: Fault code cleared	Pulse 1: Fault code cleared	Pulse 1: Fault code cleared	Pulse 1: Fault code cleared
	02h	RW	U16		Mode Cmd		0: Speed mode	1: P2P position mode	3: Home mode	2: Torque mode
	03h	RW	U16				Speed command (unsigned			

Index	sub	R/W	Size	Descriptions			Speed Mode	Position Mode	Home Mode	Torque Mode
				bit	Definition	Priority				
							decimal)			
	04h	RW	U16							
	05h	RW	S32					Position command		
	06h	RW								
	07h	RW	U16							Torque command (signed decimal)
	08h	RW	U16							Speed limit (unsigned decimal)
2061h	01h	R	U16	0	Arrive		Frequency command reached	Position attained	Homing complete	Torque attained
				1	Dir		0: Motor FWD run 1: Motor REV run	0: Motor FWD run 1: Motor REV run	0: Motor FWD run 1: Motor REV run	0: Motor FWD run 1: Motor REV run
				2	Warn		Warning occurs	Warning	Warning	Warning
				3	Error		Error detected	Error detected	Error detected	Error detected
				4						
				5	JOG		JOG	JOG	JOG	JOG
				6	Qstop		Quick stop	Quick stop	Quick stop	Quick stop
				7	Power On		Switch ON	Switch ON	Switch ON	Switch ON
				15–8						
	02h	R								
	03h	R	U16				Actual output frequency	Actual output frequency	Actual output frequency	Actual output frequency
	04h	R								
	05h	R	S32				Actual position (absolute)	Actual position (absolute)	Actual position (absolute)	Actual position (absolute)
	06h	R								
	07h	R	S16				Actual torque	Actual torque	Actual torque	Actual torque

CANopen built-in PLC register D mapping (from D900–D999 mapping to 3000H–3063H)

Index	Sub	Property	Definition
3000	0	RW	PLC D900
3001	0	RW	PLC D901
3002	0	RW	PLC D902
…	…	RW	…
3063	0	RW	PLC D999

DS402 Standard

Index	Sub	Definition	Default	R/W	Size	Unit	PDO Map	Mode	NOTE
6007H	0	Abort connection option code	2	RW	S16		Yes		0 : No action 2 : Disable Voltage 3 : quick stop
603FH	0	Error code	0	R0	U16		Yes		
6040H	0	Control word	0	RW	U16		Yes		
6041H	0	Status word	0	R0	U16		Yes		Software limit function disabled: 0x6041 bit11=0 Software limit function enabled: 0x6041 bit11=1 Hardware limit function disabled: 0x6041 bit14=0 Hardware limit function enabled: 0x6041 bit14=1
6042H	0	vl target velocity	0	RW	S16	rpm	Yes	vl	
6043H	0	vl velocity demand	0	RO	S16	rpm	Yes	vl	
6044H	0	Velocity actual value	0	RO	I32	rpm	Yes		
604FH	0	vl ramp function time	10000	RW	U32	ms	Yes	vl	Unit must be 100 ms, and check if the setting is 0.
6050H	0	vl slow down time	10000	RW	U32	ms	Yes	vl	
605AH	0	Quick stop option code	2	RW	S16		No		0 : disable drive function 1 : slow down on slow down ramp 2 : slow down on quick stop ramp 5 : slow down on slow down ramp and stay in QUICK STOP

Index	Sub	Definition	Default	R/W	Size	Unit	PDO Map	Mode	NOTE
									6：slow down on quick stop ramp and stay in QUICK STOP
605CH	0	Disable operation option code	1	RW	S16		No		0：Disable drive function 1：Slow down with slow down ramp; disable of the drive function
6060H	0	Mode of operation	2	RW	S8		Yes		1：Profile Position Mode 2：Velocity Mode 4：Torque Profile Mode 6：Homing Mode
6061H	0	Mode of operation display	2	RO	S8		Yes		Same as above
6064H	0	Position actual value	0	RO	S32	pulse	Yes		
6071H	0	Target torque	0	RW	S16	0.1%	Yes	tq	Valid unit: 1%
6072H	0	Max torque	1500	RW	U16	0.1%	Yes	tq	Valid unit: 1%
6075H	0	Motor rated current	0	RO	U32	mA	No	tq	
6077H	0	Torque actual value	0	RO	S16	0.1%	Yes	tq	
6078H	0	Current actual value	0	RO	S16	0.1%	Yes	tq	
6079H	0	DC link circuit voltage	0	RO	U32	mV	No	tq	
607AH	0	Target position	0	RW	S32	pulse	Yes		
6080h	0	Max motor speed	0	RW	U32	rpm	Yes		
6087h	0	Torque slope	0	RW	U32	ms	No	tq	
60C0h	0	Interpolation sub mode selection	0	RW	I16		No	ip	
60C1h	1	Position command	0	RW	I32	pulse	No	ip	
60C1h	2	Velocity – position command difference	0	RW	I16	pulse/sec	No	ip	
60C2h	1	Interpolation time period value	0	RW	U8	ms	No	ip	
60C2h	2	Interpolation time index	0	RW	U8		No	ip	

15-5 CANopen Fault Code

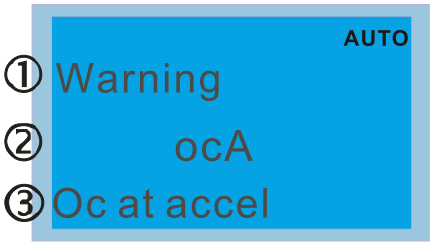

① Display error signal
② Abbreviate error code
③ Display error description

📖 Refer to settings for Pr.06-17–Pr.06-22

📖 Refer to Chapter 14 Fault Codes and Descriptions for detailed descriptions.

Setting	Display	Fault code	Description	CANopen fault register (bit 0–7)	CANopen fault code
1	AUTO Fault ocA Oc at accel	0001H	Over-current during acceleration (ocA)	1	2213H
2	AUTO Fault ocd Oc at decel	0002H	Over-current during deceleration (ocd)	1	2213H
3	AUTO Fault ocn Oc at normal SPD	0003H	Over-current during steady operation (ocn)	1	2314H
4	AUTO Fault GFF Ground fault	0004H	Ground fault (GFF)	1	2240H
5	AUTO Fault occ Short Circuit	0005H	IGBT short circuit between upper bridge and lower bridge (occ)	1	2250H
6	AUTO Fault ocS Oc at stop	0006H	Over-current at stop (ocS)	1	2314H
7	AUTO Fault ovA Ov at accel	0007H	Over-voltage during acceleration (ovA)	2	3210H
8	AUTO Fault ovd Ov at decel	0008H	Over-voltage during deceleration (ovd)	2	3210H

Setting	Display	Fault code	Description	CANopen fault register (bit 0–7)	CANopen fault code
9	AUTO Fault ovn Ov at normal SPD	0009H	Over-voltage at constant speed (ovn)	2	3210H
10	AUTO Fault ovS Ov at stop	000AH	Over-voltage at stop (ovS)	2	3210H
11	AUTO Fault LvA Lv at accel	000BH	Low-voltage during acceleration (LvA)	2	3220H
12	AUTO Fault Lvd Lv at decel	000CH	Low-voltage during deceleration (Lvd)	2	3220H
13	AUTO Fault Lvn Lv at normal SPD	000DH	Low-voltage at constant speed (Lvn)	2	3220H
14	AUTO Fault LvS Lv at stop	000EH	Low-voltage at stop (LvS)	2	3220H
15	AUTO Fault OrP Phase lacked	000FH	Phase loss protection (OrP)	2	3130H
16	AUTO Fault oH1 IGBT over heat	0010H	IGBT overheating (oH1)	3	4310H
17	AUTO Fault oH2 Heat Sink oH	0011H	Heatsink overheating (oH2)	3	4310H
18	AUTO Fault tH1o Thermo 1 open	0012H	IGBT temperature detection failure (tH1o)	3	FF00H
19	AUTO Fault tH2o Thermo 2 open	0013H	Capacitor hardware error (tH2o)	3	FF01H

Setting	Display	Fault code	Description	CANopen fault register (bit 0–7)	CANopen fault code
21	AUTO Fault oL Over load	0015H	Over load (oL)	1	2310H
22	AUTO Fault EoL1 Thermal relay 1	0016H	Electronic thermal relay 1 protection (EoL1)	1	2310H
23	AUTO Fault EoL2 Thermal relay 2	0017H	Electronic thermal relay 2 protection (EoL2)	1	2310H
24	AUTO Fault oH3 Motor over heat	0018H	Motor overheating (oH3)	3	FF20H
25	AUTO Fault INTR Interrupt Error	0019H	Interrupt error (INTR)	0	6100H
26	AUTO Fault ot1 Over torque 1	001AH	Over torque 1 (ot1)	3	8311H
27	AUTO Fault ot2 Over torque 2	001BH	Over torque 2 (ot2)	3	8311H
28	AUTO Fault uC Under current	001CH	Under current (uC)	1	8321H
29	AUTO Fault LMIT Limit Error	001DH	Limit Error (LiT)	1	7320H
30	AUTO Fault cF1 EEPROM write err	001EH	EEPROM write error (cF1)	5	5530H
31	AUTO Fault cF2 EEPROM read err	001FH	EEPROM read error (cF2)	5	5530H

Setting	Display	Fault code	Description	CANopen fault register (bit 0–7)	CANopen fault code
33	AUTO Fault cd1 Ias sensor err	0021H	U-phase error (cd1)	1	FF04H
34	AUTO Fault cd2 Ibs sensor err	0022H	V-phase error (cd2)	1	FF05H
35	AUTO Fault cd3 Ics sensor err	0023H	W-phase error (cd3)	1	FF06H
36	AUTO Fault Hd0 cc HW error	0024H	cc hardware error (Hd0)	5	FF07H
37	AUTO Fault Hd1 Oc HW error	0025H	oc hardware error (Hd1)	5	FF08H
38	AUTO Fault Hd2 Ov HW error	0026H	ov hardware error (Hd2)	5	FF09H
39	AUTO Fault Hd3 occ HW error	0027H	occ hardware error (Hd3)	5	FF0AH
40	AUTO Fault AUE Auto tuning error	0028H	Auto-tuning error (AUE)	1	FF21H
41	AUTO Fault AFE PID Fbk error	0029H	PID loss ACI (AFE)	7	FF22H
42	AUTO Fault PGF1 PG Fbk error	002AH	PG feedback error (PGF1)	7	7301H
43	AUTO Fault PGF2 PG Fbk loss	002BH	PG feedback loss (PGF2)	7	7301H

Setting	Display	Fault code	Description	CANopen fault register (bit 0–7)	CANopen fault code
44	AUTO Fault PGF3 PG Fbk over SPD	002CH	PG feedback stall (PGF3)	7	7301H
45	AUTO Fault PGF4 PG Fbk deviate	002DH	PG slip error (PGF4)	7	7301H
48	AUTO Fault ACE ACI loss	0030H	ACI loss (ACE)	1	FF25H
49	AUTO Fault EF External fault	0031H	External fault (EF)	5	9000H
50	AUTO Fault EF1 Emergency stop	0032H	Emergency stop (EF1)	5	9000H
51	AUTO Fault bb Base block	0033H	External base block (bb)	5	9000H
52	AUTO Fault Pcod Password error	0034H	Password is locked (Pcod)	5	FF26H
53	AUTO Fault ccod SW Code Error	0035H	SW Code Error (ccod)	5	6100H
54	AUTO Fault CE1 PC err command	0036H	Illegal command (CE1)	4	7500H
55	AUTO Fault CE2 PC err address	0037H	Illegal data address (CE2)	4	7500H
56	AUTO Fault CE3 PC err data	0038H	Illegal data value (CE3)	4	7500H

Setting	Display	Fault code	Description	CANopen fault register (bit 0–7)	CANopen fault code
57	AUTO Fault CE4 PC slave fault	0039H	Data is written to read-only address (CE4)	4	7500H
58	AUTO Fault CE10 PC time out	003AH	Modbus transmission time-out (CE10)	4	7500H
60	AUTO Fault bF Braking fault	003CH	Brake transistor error (bF)	5	7110H
61	AUTO Fault ydc Y-delta connect	003DH	Y-connection / Δ-connection switch error (ydc)	2	3330H
62	AUTO Fault dEb Dec. Energy back	003EH	Deceleration energy backup error (dEb)	2	FF27H
63	AUTO Fault oSL Over slip error	003FH	Over slip error (oSL)	7	FF28H
64	AUTO Fault ryF MC Fault	0040H	Electric valve switch error (ryF)	5	7110H
65	AUTO Fault PGF5 PG HW Error	0041H	Hardware error of PG card (PGF5)	5	FF29H
68	AUTO Fault SdRv SpdFbk Dir Rev	0044H	Reverse direction of the speed feedback (SdRv)	0	8400H
69	AUTO Fault SdOr SpdFbk over SPD	0045H	Over speed rotation feedback (SdOr)	0	8400H
70	AUTO Fault SdDe SpdFbk deviate	0046H	Large deviation of speed feedback (SdDe)	0	8400H

Setting	Display	Fault code	Description	CANopen fault register (bit 0–7)	CANopen fault code
71	AUTO Fault WDTT Watchdog	0047H	Watchdog (WDTT)	1	6010H
72	AUTO Fault STL1 STO Loss 1	0048H	STO Loss 1 (STL1)	5	FF30H
73	AUTO Fault S1 S1-emergy stop	0049H	Emergency stop for external safety (S1)	5	FF2AH
75	AUTO Fault Brk EXT-Brake Error	004BH	External brake error (Brk)	5	7110H
76	AUTO Fault STO STO	004CH	STO (STO)	5	FF31H
77	AUTO Fault STL2 STO Loss 2	004DH	STO Loss 2 (STL2)	5	FF32H
78	AUTO Fault STL3 STO Loss 3	004EH	STO Loss 3 (STL3)	5	FF33H
82	AUTO Fault OPHL U phase lacked	0052H	Output phase loss U phase (OPHL)	2	2331H
83	AUTO Fault OPHL V phase lacked	0053H	Output phase loss V phase (OPHL)	2	2332H
84	AUTO Fault OPHL W phase lacked	0054H	Output phase loss W phase (OPHL)	2	2333H
85	AUTO Fault AboF PG ABZ Line off	0055H	PG ABZ line off (AboF)	7	7301H

Setting	Display	Fault code	Description	CANopen fault register (bit 0–7)	CANopen fault code
86	AUTO Fault UvoF PG UVW Line off	0056H	PG UVW line off (UvoF)	7	7301H
87	AUTO Fault oL3 Derating Error	0057H	Overload protection at low frequency (oL3)	0	8A00H
89	AUTO Fault RoPd Rotor Pos. Error	0059H	Rotor position detection error (RoPd)	0	8A00H
90	AUTO Fault Fstp Force Stop	005AH	Force to stop (Fstp)	7	FF2EH
92	AUTO Fault LEr Pul. Tun. L Err	005CH	Pulse Tuning Inductance (L) Error (LEr)	7	FF5BH
93	AUTO Fault TRAP CPU Trap 0 error	005BH	CPU error 0 (TRAP)	7	6000H
101	AUTO Fault CGdE Guarding T-out	0065H	CANopen guarding error (CGdE)	4	8130H
102	AUTO Fault CHbE Heartbeat T-out	0066H	CANopen heartbeat error (CHbE)	4	8130H
104	AUTO Fault CbFE Can bus off	0068H	CANopen bus off error(CbFE)	4	8140H
105	AUTO Fault CIdE Can bus Index Err	0069H	CANopen index error (CIdE)	4	8100H
106	AUTO Fault CAdE Can bus Add. Err	006AH	CANopen station address error (CAdE)	4	8100H

Setting	Display	Fault code	Description	CANopen fault register (bit 0–7)	CANopen fault code
107	AUTO Fault CFrE Can bus off	006BH	CANopen memory error (CFrE)	4	8100H
111	AUTO Fault ictE InrCom Time Out	006FH	InrCOM time-out error (ictE)	4	7500H
112	AUTO Fault SfLK PMLess Shaft Lock	0070H	PMLess shaft lock (SfLK)	0	8A00H
142	AUTO Fault AUE1 Auto tuning Err	008EH	Auto-tune error 1 (AUE1)	1	FF3DH
143	AUTO Fault AUE2 Auto tuning Err	008FH	Auto-tune error 2 (AUE2)	1	FF3EH
144	AUTO Fault AUE3 Auto tuning Err	0090H	Auto-tune error 3 (AUE3)	1	FF3FH
148	AUTO Fault AUE4 Auto tuning Err	0094H	Auto-tune error 4 (AUE4)	1	FF43H
171	AUTO Fault oPEE Over Pos Err Lim	00ABh	Over Position Error Limit (OPEE)	7	8600H
174	AUTO Fault EcEr Enc Error	00AEH	Encoder error (EcEr)	0	7320H
175	AUTO Fault EcCe Enc Com Error	00AFH	Encoder communication error (EcCe)	0	7302H
176	AUTO Fault EcOF Enc Pos OverFlow	00B0H	Encoder multi-turn overflows (EcOF)	0	7301H

Setting	Display	Fault code	Description	CANopen fault register (bit 0–7)	CANopen fault code
177	AUTO Fault EcNP Enc Batt NoPow	00B1H	Encoder battery no power (EcNP)	0	7301H
178	AUTO Fault EcMc Enc MultiCNT	00B2H	Encoder multi-turn error (EcMc)	0	7301H
179	AUTO Fault PgMr PG Multi Read	00B3H	PG multi-turn read error (PgMr)	0	7320H
180	AUTO Fault EcSc Enc SingleCNT	00B4H	Encoder single-turn error (EcSc)	0	7301H
181	AUTO Fault PgCe PG Cmd Error	00B5H	PG command error (PgCe)	0	7320H
182	AUTO Fault IPTE IP Time Fault	00B6H	Interpolation time setting error (IPTE)	7	8680H
183	AUTO Fault IPCM IP Com Lost Sync	00B7H	Interpolation command failure (IPCM)	7	8681H
184	AUTO Fault NoMo No Motion Func	00B8H	No motion control (NoMo)	7	FF4EH
185	AUTO Fault Moto Motor Code Fault	00B9H	Motor code error (MoTo)	0	7122H
186	AUTO Fault DDTO D2D Timeout	00BAH	D2D time-out (DDTO)	4	7500H
187	AUTO Fault FobF Flux Obs Fail	00BBH	Flux linkage observer failure (FobF)	7	FF4FH

Setting	Display	Fault code	Description	CANopen fault register (bit 0–7)	CANopen fault code
188	AUTO Fault TLAT TL AutoTune	00BCH	Load estimation error (TLAT)	7	FF55H
189	AUTO Fault JsAT JSys AutoTune	00BDH	Inertia estimation error (JsAT)	7	FF56H
190	AUTO Fault BWAT ASR BW AutoTune	00BEH	Bandwidth estimation error (BWAT)	7	FF57H
191	AUTO Fault ATPF ASR AT Pos Fail	00BFH	Positioning failure during estimation (ATPF)	7	FF58H
192	AUTO Fault HmOE HomeOfst OvrFlow	00C0H	Homing deviation is too large (HmOE)	7	8613H
193	AUTO Fault CMTE Clr Multi Turn Err	00C1H	Cleaning multi-turn data failure (CMTE)	7	8613H
195	AUTO Fault ATTv ASR BW AT Travel	00C3H	ASR AT process is too short (ATTv)	7	FF59H

15-6 CANopen LED Function

There are two CANopen flash signs: RUN and ERR.

RUN LED:

LED status	Condition	CANopen State
OFF	OFF	Initial
Blinking	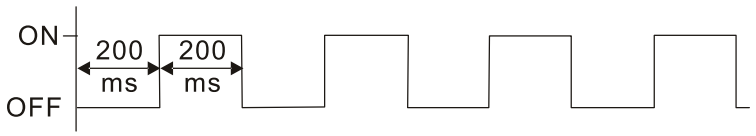	Pre-Operation
Single flash	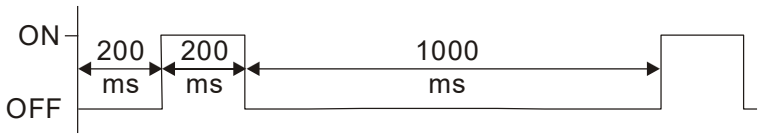	Stopped
ON	ON	Operation

ERR LED:

LED status	Condition / Status
OFF	No Error
Single flash	At least one CANopen packet failure 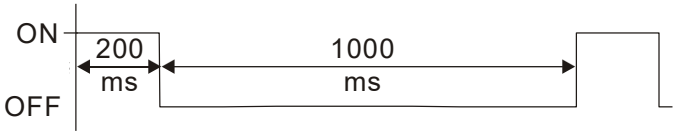
Double flash	Guarding failure or heartbeat failure 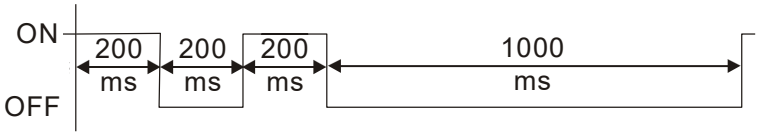
Triple flash	SYNC failure 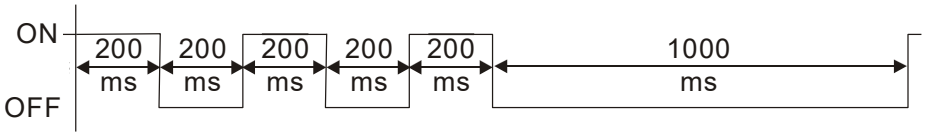
ON	Bus off

Chapter 16 PLC Function Applications

16-1 PLC Summary

16-2 Notes before PLC Use

16-3 Turn On

16-4 Basic Principles of PLC Ladder Diagrams

16-5 Various PLC Device Functions

16-6 Introduction to the Command Window

16-7 Error Display and Handling

16-8 CANopen Master Control Applications

16-9 Explanation of Various PLC Mode Controls (Speed, Torque, Homing, and Position)

16-10 Internal Communications Main Node Control

16-11 Count Function Using MI8

16-12 Modbus Remote IO Control Applications (use MODRW)

16-13 Calendar Functions

16-1 PLC Summary

16-1-1 Introduction

The commands provided by the CH2000's built-in PLC functions, including the ladder diagram editing tool WPLSoft, as well as the usage of basic commands and applications commands, chiefly retain the operating methods of Delta's PLC DVP series.

16-1-2 WPLSoft ladder diagram editing tool

WPLSoft is Delta's program editing software for the DVP and CH2000 programmable controllers in the Windows operating system environment. Apart from general PLC program design general Windows editing functions (such as cut, paste, copy, multiple windows, etc.), WPLSoft also provides many Chinese/ English annotation editing and other convenience functions (such as registry editing, settings, file reading, saving, and contact graphic monitoring and settings, etc.).

The following basic requirements that need to install WPLSoft editing software:

Item	System requirements
Operating system	Windows 95 / 98 / 2000 / NT / ME / XP / 7 / 10
CPU	At least Pentium 90
Memory	At least 16 MB (we recommend at least 32 MB)
Hard drive	Hard drive capacity: at least 100 MB free space One optical drive (for use in installing this software)
Display	Resolution: 640×480, at least 16 colors; it is recommended that the screen area be set at 800×600 pixels
Mouse	Ordinary mouse or Windows-compatible device
Printer	Printer with a Windows driver program
RS-485 port	Must have at least an RS-485 port to link to the PLC

16-2 Notes before PLC Use

1. The PLC has a preset communications format of 7, N, 2, 9600, with node 2; the PLC node can be changed in Pr.09-35, but this address may not be the same as the drive's address setting of Pr.09-00.
2. CH2000 provides 2 communications serial ports that can be used to download PLC programs (see figure below). Channel 1 has a fixed communications format of 19200, 8, N, 2 RTU.

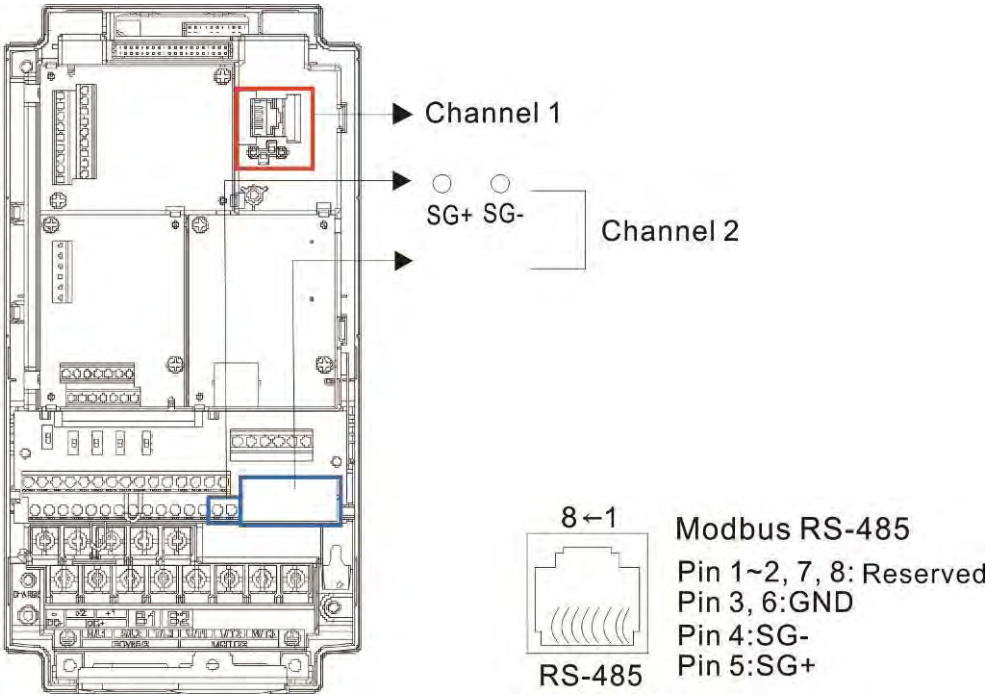

3. The client can simultaneously access data from the converter and internal PLC, which is performed through identification of the node. For instance, if the converter node is 1 and the internal PLC node is 2, then the client command will be
   01 (node) 03 (read) 0400 (address) 0001 (1 data item), indicating that it must read the data in converter Pr.04-00
   02 (node) 03 (read) 0400 (address) 0001 (1 data item), indicating that it must read the data in internal PLC X0
4. The PLC program will be disabled when uploading/ downloading programs.
5. Please note when using WPR commands to write in parameters, values may be modified up to a maximum of 10^9 times, otherwise a memory write error will occur. The calculation of modifications is based on whether the entered value has been changed. If the entered value is left unchanged, the modifications will not increase afterwards. But if the entered value is different from before, the number of modifications will increase by one.
6. When Pr.00-04 is set as 28, the displayed value will be the value of PLC register D1043 (see figure below):

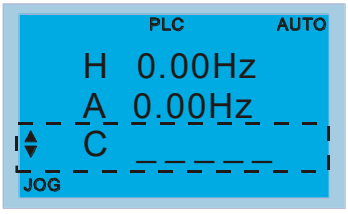

Digital Keypad KPC-CC01
Can display 0–65535

7. In the PLC Run and PLC Stop mode, the content 9 and 10 of Pr.00-02 cannot be set and cannot be reset to the default value.
8. The PLC can be reset to the default value when Pr.00-02 is set as 6.
9. The corresponding MI function will be disabled when the PLC writes to input contact X.
10. When the PLC controls converter operation, control commands will be entirely controlled by the PLC and will not be affected by the setting of Pr.00-21.
11. When the PLC controls converter frequency commands (FREQ commands), frequency commands will be entirely controlled by the PLC, and will not be affected by the setting of Pr.00-20 or the Hand ON/OFF configuration.
12. When the PLC controls converter frequency (TORQ commands), torque commands will be entirely controlled by the PLC, and will not be affected by the setting of Pr.11-33 or the Hand ON/OFF configuration.
13. When the PLC controls converter frequency (POS commands), position commands will be entirely controlled by the PLC, and will not be affected by the setting of Pr.11-40 or the Hand ON/OFF configuration.
14. When the PLC controls converter operation, if the keypad Stop setting is valid, this will trigger an FStP error and cause stoppage.

16-3 Turn On

16-3-1 Connect to PC

Start operation of PLC functions in accordance with the following four steps

1. After pressing the Menu key and selecting 4: PLC on the KPC-CC01 digital keypad, press the Enter key (see figure below).

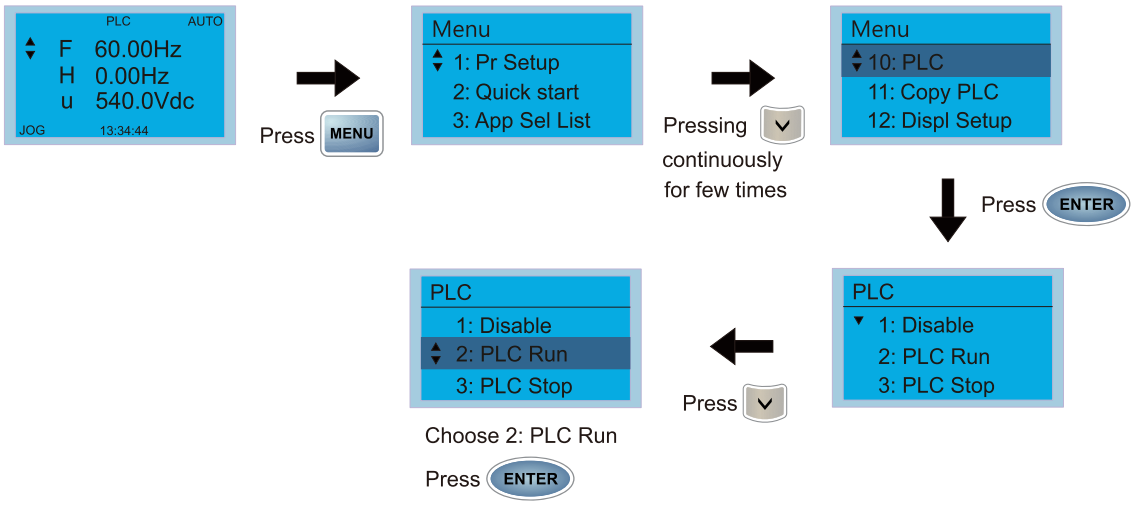

2. Wiring: Connect the drive's RJ45 communications interface to a PC via the RS-485.

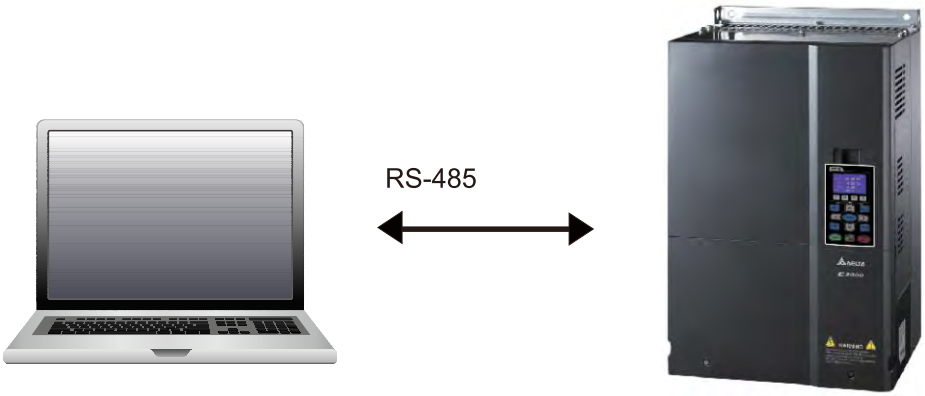

CH2000

3. PLC function usage

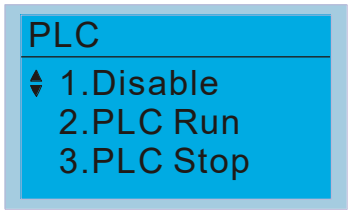

- PLC functions are as shown in the figure on the left; select item 2 and implement PLC functions.

1: No function (Disable)

2: Enable PLC (PLC Run)

3: Stop PLC functions (PLC Stop)

- When the external multifunctional input terminals (MI1–MI8) are in PLC Mode select bit0 (51) or PLC Mode select bit1 (52), and the terminal contact is closed or opened, it will compulsorily switch to the PLC mode, and keypad switching will be ineffective. Corresponding actions are as follows:

PLC mode Using KPC-CC01	PLC Mode select bit1(52)	PLC Mode select bit0 (51)
Disable	OFF	OFF
PLC Run	OFF	ON
PLC Stop	ON	OFF
Maintain previous state	ON	ON

NOTE:

- When input/ output terminals (FWD REV MI1–MI8, MI10–15, Relay 1, Relay 2, RY10–RY15, MO1–MO2, and MO10–MO11) are included in the PLC program, these input/ output terminals will only be used by the PLC. As an example, when the PLC program controls Y0 during PLC operation (PLC1 or PLC2), the corresponding output terminal relay (RA/RB/RC) will operate in accordance with the program. At this time, the multifunctional input/ output terminal setting will be ineffective. Because these terminal functions are already being used by the PLC, the DI/ DO/ AO in use by the PLC can be determined by looking at Pr.02-52, Pr.02-53, and Pr.03-30.
- When the PLC's procedures use special register D1040, the corresponding AO contact AFM1 will be occupied, and AFM2 corresponding to special register D1045 will have the same situation.
- Pr.03-30 monitors the state of action of the PLC function analog output terminal; bit0 corresponds to the AFM1 action state, and bit1 corresponds to the AFM2 action state.

16-3-2 I/O device explanation

Input devices:

Serial No.	X0	X1	X2	X3	X4	X5	X6	X7	X10	X11	X12	X13	X14	X15	X16	X17
1	FWD	REV	MI1	MI2	MI3	MI4	MI5	MI6	MI7	MI8						
2											MI10	MI11	MI12	MI13	MI14	MI15
3											MI10	MI11	MI12	MI13		

1: Control I/O

2: Expansion card: EMC-D611A (D1022 = 4)

3: Expansion card: EMC-D42A (D1022 = 5)

Output devices:

Serial No.	Y0	Y1	Y2	Y3	Y4	Y5	Y6	Y7	Y10	Y11	Y12	Y13	Y14	Y15	Y16	Y17
1	RY1	RY2		MO1	MO2											
2						MO10	MO11									
3						RY10	RY11	RY12	RY13	RY14	RY15					

1: Control I/O

2: Expansion card: EMC-D42A (D1022 = 5)

3: Expansion card: EMC-R6AA (D1022 = 6)

RY1 / RY2 / RY3

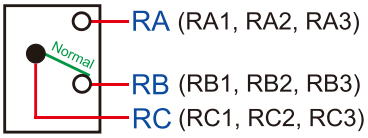

RY10 / RY11 / RY12 / RY13 / RY14 / RY15

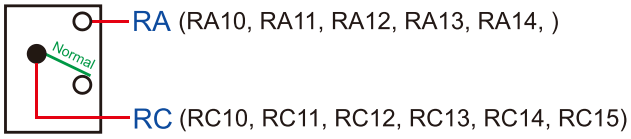

16-3-3 Installation WPLSoft

Download and install WPLSoft editing software in Delta's website:

After completing installation, the WPLSoft program will be installed in the designated subfolder "C:\Program Files\Delta Industrial Automation\WPLSoft x.xx".

16-3-4 Program writing

Step 1: Click on the WPLSoft icon to start the editing software. (See figure 16-1)

Figure 16-1 (Left: WPLSoft icon; Right: Start WPLSoft)

Step 2: The WPLSoft editing window appears (see figure 16-2 below). When running WPLSoft for the first time, before "New file" has been used, only the "File (F)," "Communications (C)," View (V)," "Options (O)," and "Help (H)" columns will appear on the function toolbar.

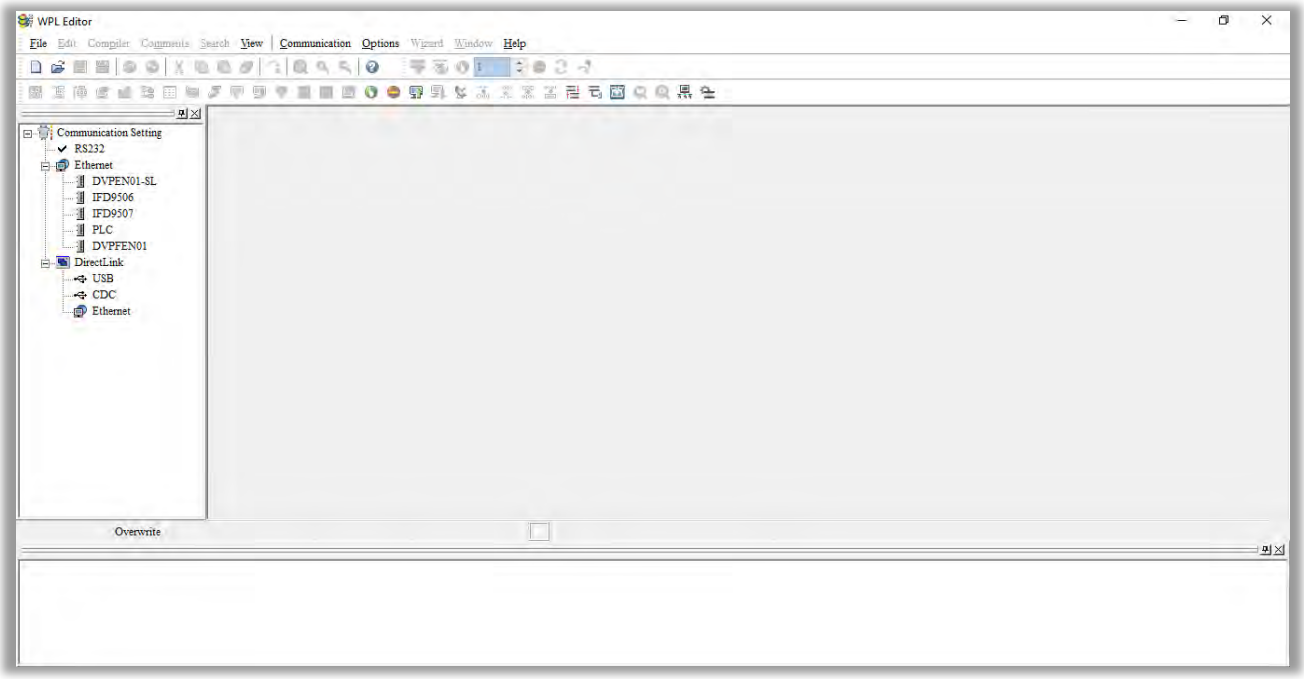

Figure 16-2

NOTE: After running WPLSoft for the second time, the last file edited will open and be displayed in the editing window. The following figure 16-3 provides an explanation of the WPLSoft editing software window:

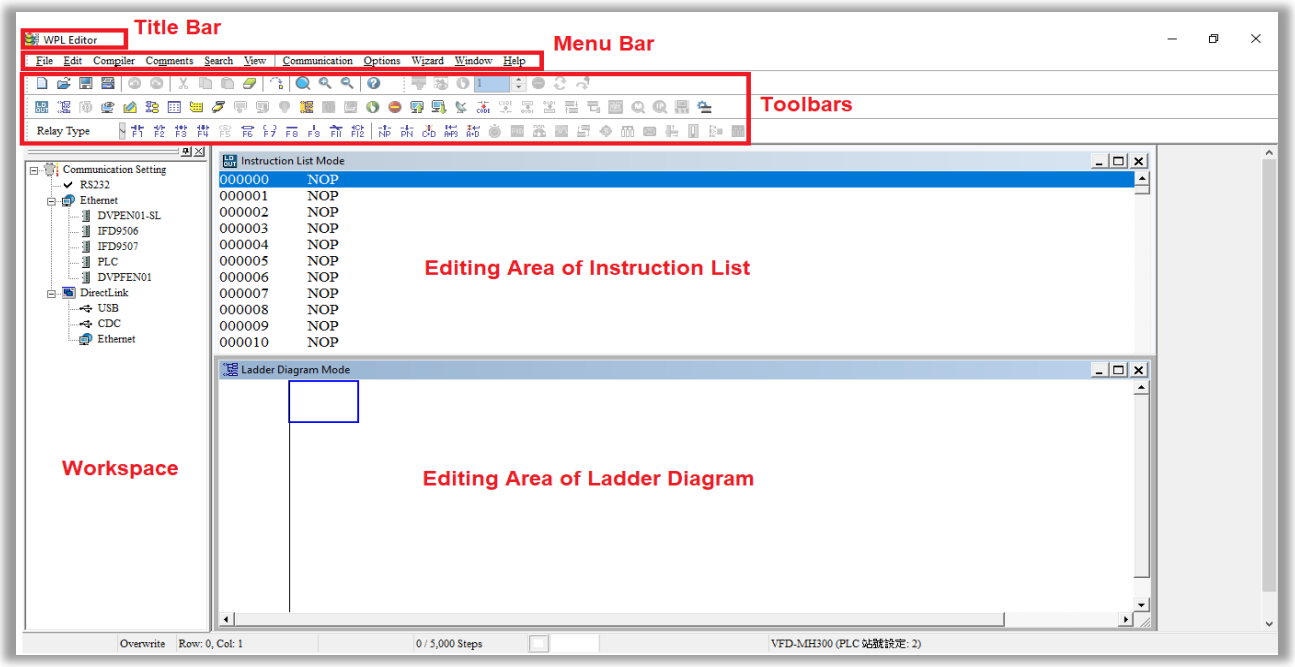

Figure 16-3

Step 3: Click on the icon on the toolbar: opens new file (Ctrl+N), see figure 16-4 below

Figure 16-4

NOTE: You can also find “New file (N) (Ctrl+N)” in the "File (F)", as shown in figure 16-5 below.

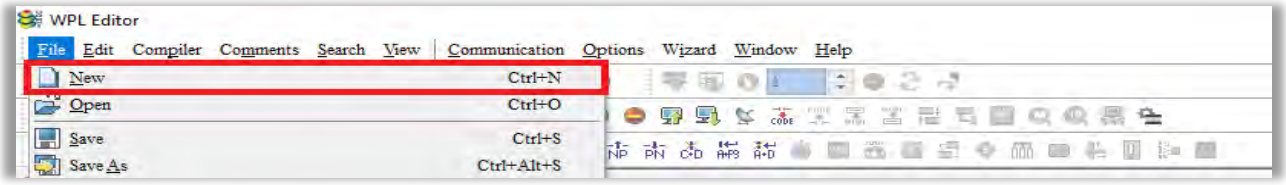

Figure 16-5

Step 4: The "Device settings" window will appear after clicking, see figure 16-6 below. You can now enter the project title and filename, and select the device and communication settings to be used.

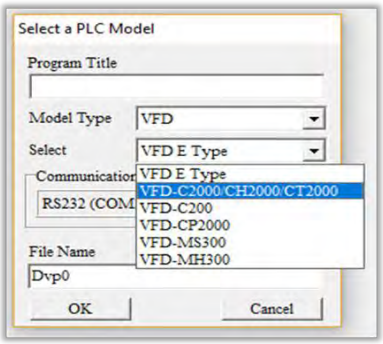

Figure 16-6

Communications settings: Perform settings in accordance with the desired communications method. See figure 16-7 below.

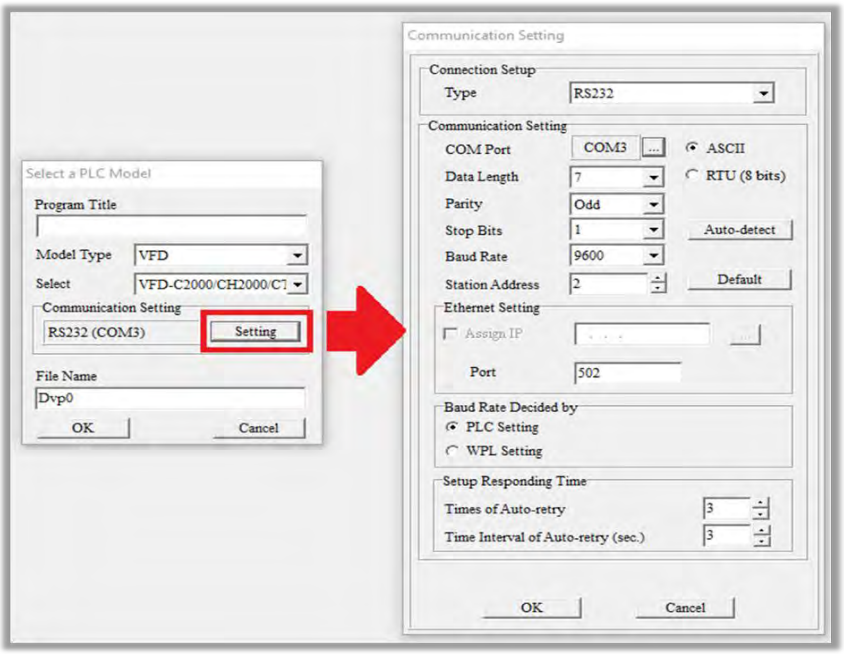

Figure 16-7

Step 5: Press Confirm after completing settings and begin program editing. There are two program editing methods; you can choose whether to perform editing in the command mode or the ladder diagram mode (see figure 16-8 below).

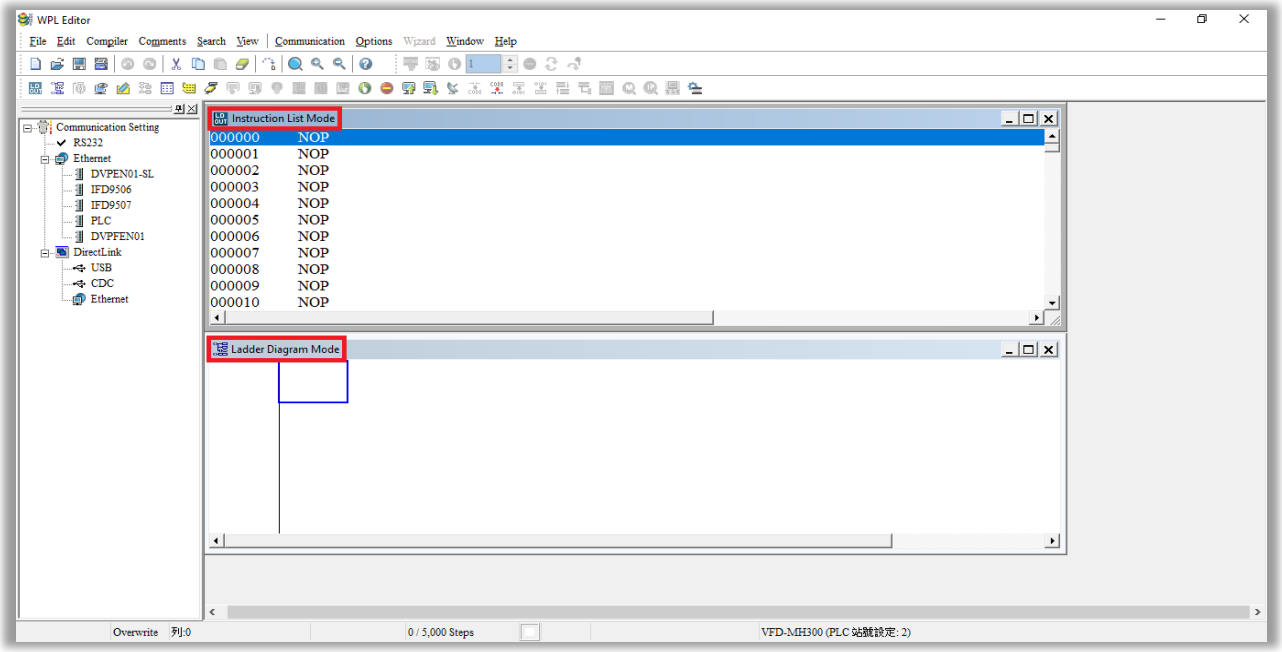

Figure 16-8

NOTE: In ladder diagram mode, you can perform program editing using the buttons on the function icon row (see figure 16-9 below).

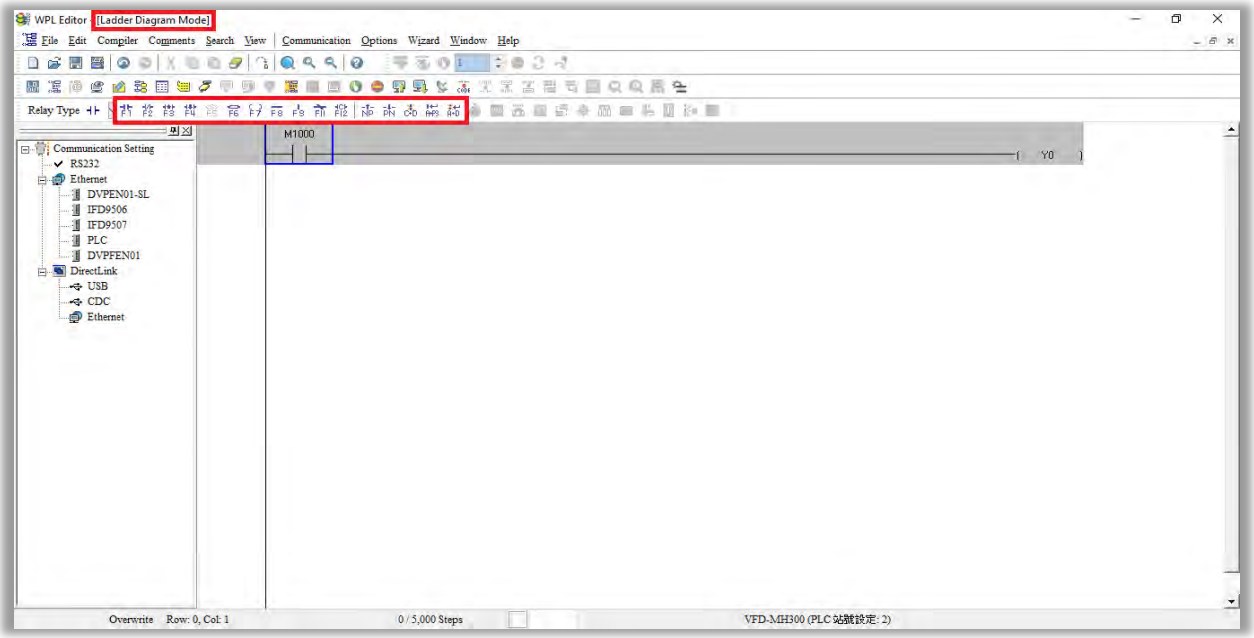

Figure 16-9

Basic Operation-Example

Input the ladder diagram as the figure below. The following steps can be operated through the mouse or function key (F1–F12) on the keyboard.

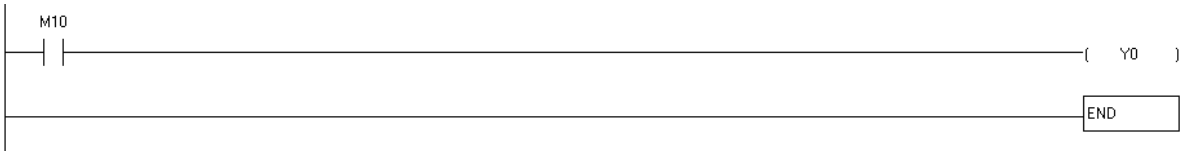

Figure 16-10

Step 1: The following screen will appear after a new file is established:

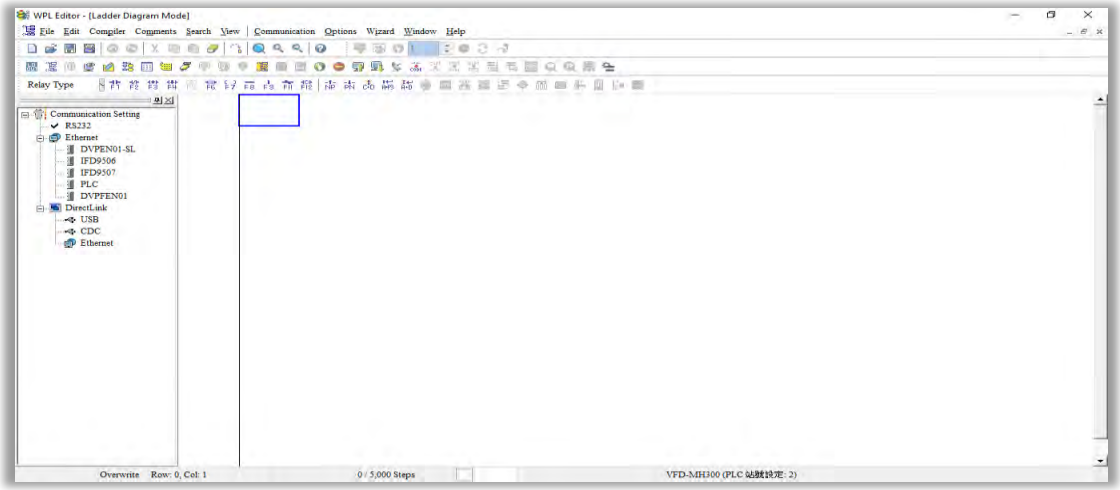

Figure 16-11

Step 2: Click on the always-open switch icon or press the function key F1. After the name of the input device and the comment dialog box have appeared, the device name (such as "M"), device number (such as "10"), and input comments (such as "auxiliary contact") can be selected; press the OK button when finished (see figure 16-12 and 16-13 below).

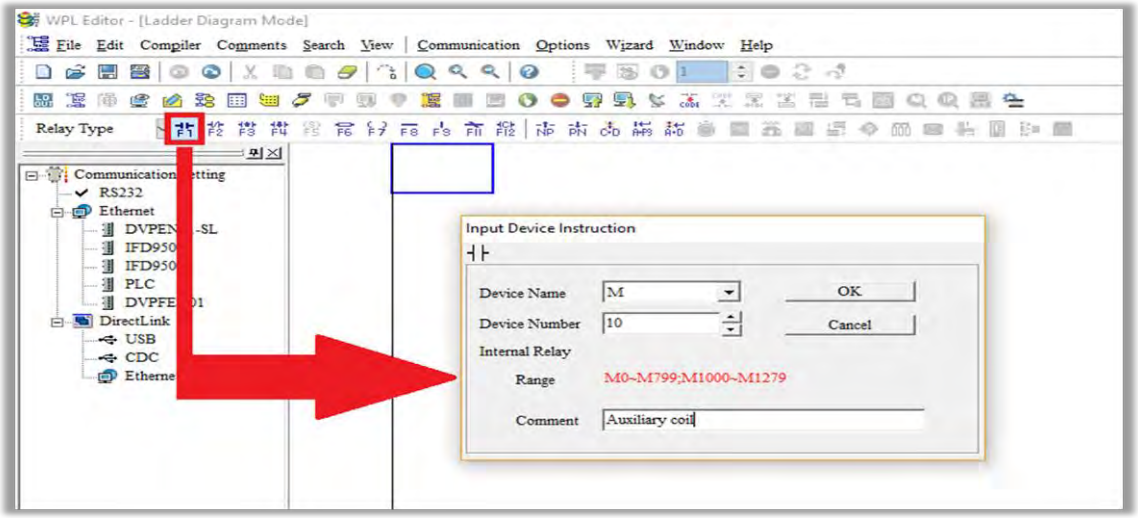

Figure 16-12

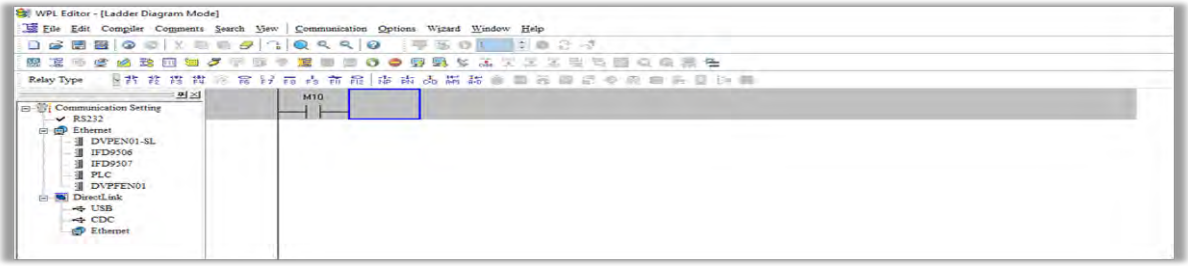

Figure 16-13

Step 3: Click on the output coil icon or press function key F7. After the name of the input device and the comment dialog box have appeared, the device name (such as "Y"), device number (such as "0"), and input comments (such as "output coil") can be selected; press the OK button when finished (see figure 16-14 and 16-15 below).

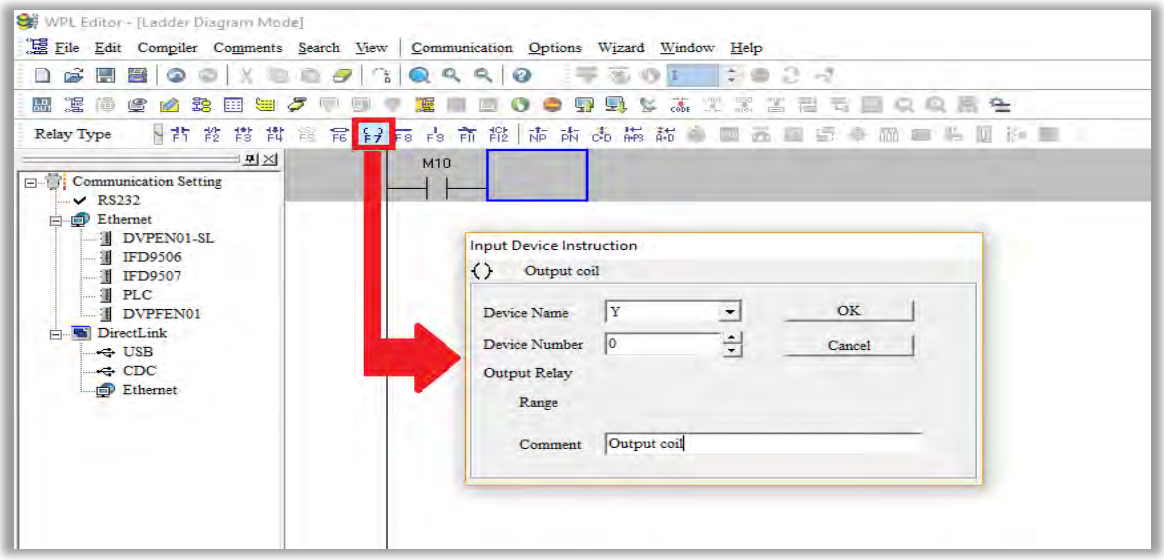

Figure 16-14

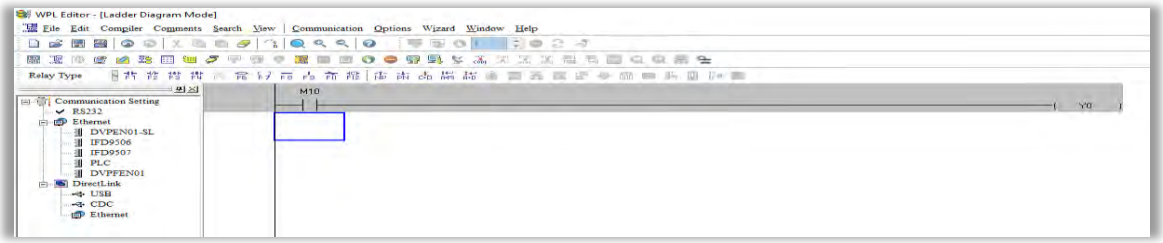

Figure 16-15

Step 4: Press “ENTER” button, when the “Input Instructions” window appears, key in “END” in the field and press the OK button (see figure 16-16 and 16-17 below).

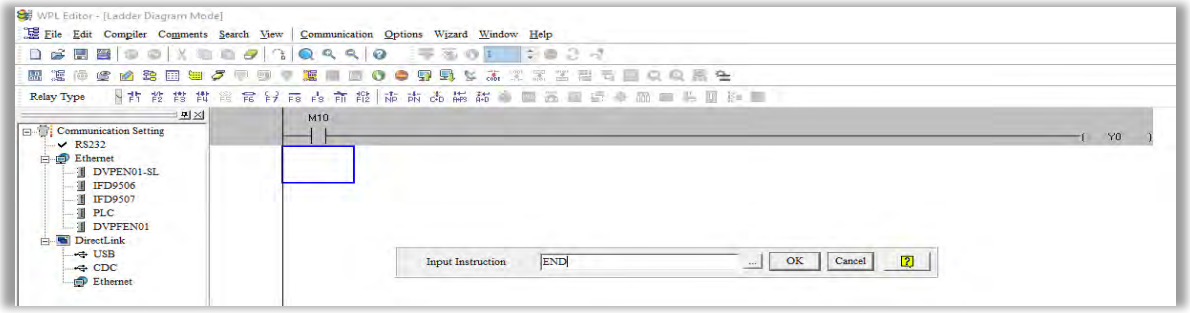

Figure 16-16

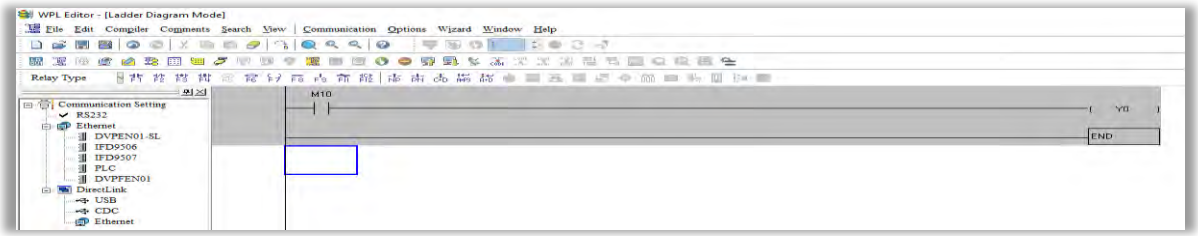

Figure 16-17

Step 5: Click on the "Ladder diagram => Code" icon, which will compile the edited ladder diagram as a command program. After compiling, the number of steps will appear on the left side of the busbar (see figure 16-18 below).

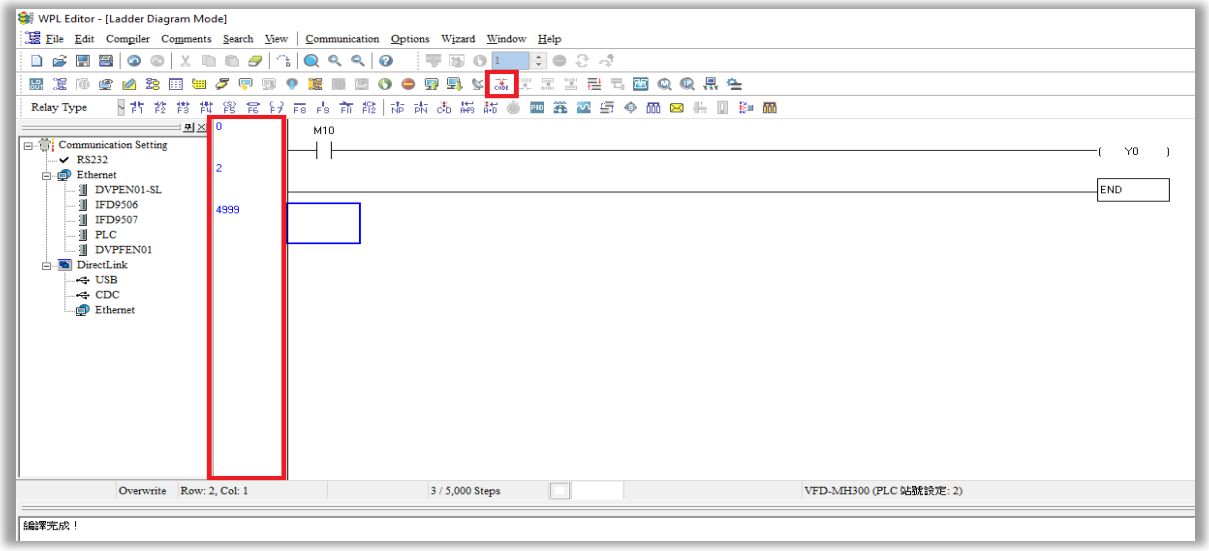

Figure 16-18

16-3-5 Program download

After inputting a program using WPLSoft, select compile . After completing compilation, select the to download a program. WPLSoft will perform program download with the online PLC in the communications format specified in communications settings.

16-3-6 Program monitoring

While confirming that the PLC is in the Run mode, after downloading a program, click on in the communications menu and select start ladder diagram control (see figure below)

16-4 Basic Principles of PLC Ladder Diagrams

16-4-1 Schematic diagram of PLC ladder diagram program scanning

Output results are calculated on the basis of the ladder diagram configuration (internal devices will have real-time output before results are sent to an external output point)

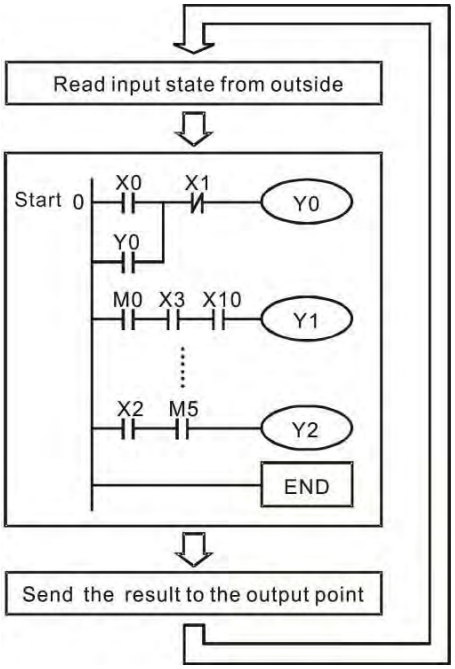

Repeated implementation

16-4-2 Introduction to ladder diagrams

Ladder diagrams comprise a graphic language widely applied in automatic control, and employs common electrical control circuit symbols. After a ladder diagram editor has been used to create a ladder pattern, PLC program designed is completed. The use of a graphic format to control processes is very intuitive, and is readily accepted by personnel who are familiar with electrical control circuit technology. Many of the basic symbols and actions in a ladder diagram comprise commonly seen electrical devices in conventional automatic control power distribution panels, such as buttons, switches, relays, timers, and counters.

Internal PLC devices: The types and quantities of internal PLC devices vary in different brands of products. Although these internal devices use the same names as conventional electrical control circuit elements such as relays, coils, and contacts, a PLC does not actually contain these physical devices, and they instead correspond to basic elements in the PLC's internal memory (bits). For instance, if a bit is 1, this may indicate that a coil is electrified, and if that bit is 0, it will indicate that the coil is not electrified. An N.O. contact (Normal Open, or contact a) can be used to directly read the value of the corresponding bit, and an N.C. contact (Normal Close, or contact b) can be used to obtain the inverse of the bit's value. Multiple relays occupy multiple bits, and 8 bits comprise one byte; two bytes comprise one word, and two words comprise a double word. When multiple relays are processing at the same time (such as addition/ subtraction or displacement, etc.), a byte, word, or double word can be used. Furthermore, a PLC contains two types of internal devices: a timer and a counter. It not only has a coil but can count time and numerical values. Because of this, when it is necessary to process some numerical values, these values are usually in the form of bytes, words, or double words.

The various internal devices in a PLC all account for a certain quantity of storage units in the PLC's storage area. When these devices are used, the content of the corresponding storage area is read in the form of bits, bytes, or words.

Introduction to the basic internal devices in a PLC

Device Type	Description of Function
Input Relay	An input relay constitutes the basic unit of storage in a PLC's internal memory corresponding to an external input point (which serves as a terminal connecting with an external input switch and receiving external input signals). It is driven by external input signals, to which it assigns values of 0 or 1. A program design method cannot change the input relay status, and therefore cannot rewrite the corresponding basic units of an input relay, and WPLSoft cannot be used to perform compulsory On/Off actions. A relay's contacts (contacts a and b) can be used an unlimited number of times. An input relay with no input signal must be left idle and cannot be used for some other purpose. ● Device indicated as: X0, X1, X7, X10, X11, etc. This device is expressed with the symbol "X" , and a device's order is indicated with an octal number. Please refer to Chapter 16-3-2 I/O device explanation for input point numbers.
Output Relay	An output relay constitutes the basic unit of storage in a PLC's internal memory corresponding to an external output point (which connects with an external load). It may be driven by an input relay contact, a contact on another internal device, or its own contacts. It uses one NO contact to connect with external loads or other contacts, and, like input contacts, can use the contact an unlimited number of times. An output relay with no input signal will be idle, but may be used an internal relay if needed. ● Device indicated as: Y0, Y1,…Y7, Y10, Y11,…etc. This device is expressed with the symbol "Y" , and a device's order is indicated with an octal number. Please refer to Chapter 16-3-2 I/O device explanation for output point numbers.
Internal Relay	Internal relays have no direct connection with the outside. These relays are auxiliary relays inside a PLC. Their function is the same as that of an auxiliary (central) relay in an electrical control circuit: Each auxiliary relay corresponding to a basic unit of internal storage; they can be driven by input relay contacts, output relay contacts, and the contacts of other internal devices. An internal auxiliary relay's contact can also be used an unlimited number of times. Internal relays have no outputs to outside, and must output via an output point. ● Device indicated as: M0, M1 to M799, etc. This device is expressed as the symbol "M" , and its order is expressed as a decimal number.
Counter	A counter is used to perform counting operations. A count setting value (such as the number of pulses to be counted) must be assigned when a counter is used. A counter contains a coil, contact, and a counting storage device. When the coil goes from OFF to ON, this indicates that the counter has an input pulse, and one is added to its count. There are 16 bits that can be employed by the user. ● Device indicated as: C0, C1 to C79, etc. This device is expressed as the symbol "C" , and its order is expressed as a decimal number.
Timer	A timer is used to complete control of timing. The timer contains a coil, contact, and a time value register. When the coil is electrified, if the preset time is reached, the contact will be actuated (contact a will close, contact b will open), and the timer's fixed value will be given by the set value. Timer has a regulated clock cycle (timing units: 100 ms). As soon as power to the coil is cut off, the contact will no longer be actuated (contact a will open, contact b will close), and the original timing value will return to zero. ● Device indicated as: T0, T1 to T159, etc. The device is expressed as the symbol "T" , and its order is expressed as a decimal number.
Data register	When a PLC is used to perform various types of sequence control and set time value and count value control, it most commonly perform data processing and numerical operations, and data registers are used exclusively for storage of data and various parameters. Each data register contains 16 bits of binary data, which means that it can store one word. Two data registers with adjacent numbers can

Device Type	Description of Function
	be used to process double words. ● Device indicated as: D0, D1 to D399, etc. The device is expressed as the symbol "D" , and its order is expressed as a decimal number.

Ladder diagram images and their explanation

Ladder Diagram Structures	Explanation of Commands	Command	Using Device
	NO switch, contact a	LD	X、Y、M、T、C
	NC switch, contact b	LDI	X、Y、M、T、C
	Series NO	AND	X、Y、M、T、C
	Series NC	ANI	X、Y、M、T、C
	Parallel NO	OR	X、Y、M、T、C
	Parallel NC	ORI	X、Y、M、T、C
	Positive edge-triggered switch	LDP	X、Y、M、T、C
	Negative edge-triggered switch	LDF	X、Y、M、T、C
	Positive edge-triggered series	ANDP	X、Y、M、T、C
	Negative edge-triggered series	ANDF	X、Y、M、T、C
	Positive edge-triggered parallel	ORP	X、Y、M、T、C
	Negative edge-triggered parallel	ORF	X、Y、M、T、C
	Block series	ANB	N/A
	Block parallel	ORB	N/A
	Multiple outputs	MPS MRD MPP	N/A
	Coil driven output commands	OUT	Y、M
	Some basic commands, applications commands	Some basic commands Applications commands	
	Inverted logic	INV	N/A

16-4-3 Overview of PLC ladder diagram editing

The program editing method begins from the left busbar and proceeds to the right busbar (the right busbar is omitted when editing using WPLSoft). Continue to the next row after completing each row; there is a maximum of 11 contacts on each row. If this is not sufficient, a continuous line will be generated to indicate the continued connection and more devices can be added. A continuous series of numbers will be generated automatically, and identical input points can be used repeatedly. See figure below:

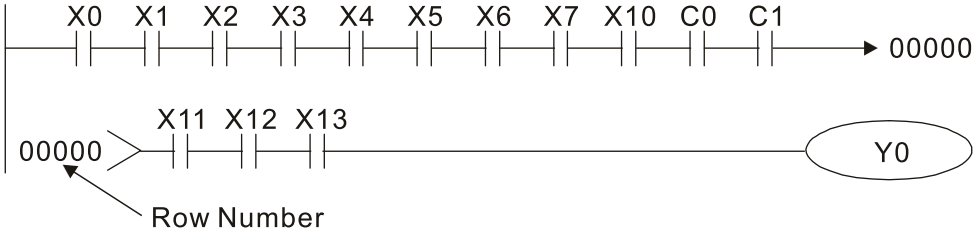

The ladder diagram programming method involves scanning from the upper left corner to the lower right corner. The coils and applications command-computing box are handled in the output, and the ladder diagram is placed on the farthest right. Taking the figure below as an example, we can gradually analyze the procedural sequence of the ladder diagram. The number in the upper right corner gives the sequential order.

Explanation of Command

	Sequence		
1	LD	X0	
2	OR	M0	
3	AND	X1	
4	LD	X3	
	AND	M1	
	ORB		
5	LD	Y1	
	AND	X4	
6	LD	T0	
	AND	M3	
	ORB		
7	ANB		
8	OUT	Y1	
	TMR	T0	K10

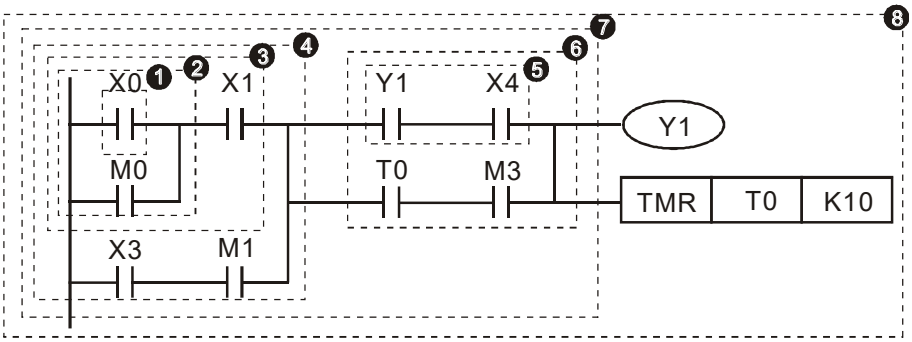

Explanation of basic structure of ladder diagrams

1. **LD (LDI) command:** An LD or LDI command is given at the start of a block.

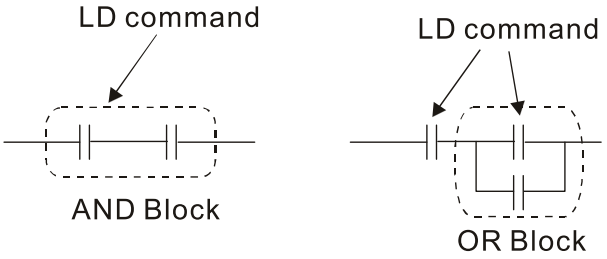

LDP and LDF have this command structure, but there are differences in their action state. LDP, LDF only act at the rising or falling edge of a conducting contact. (see figure below):

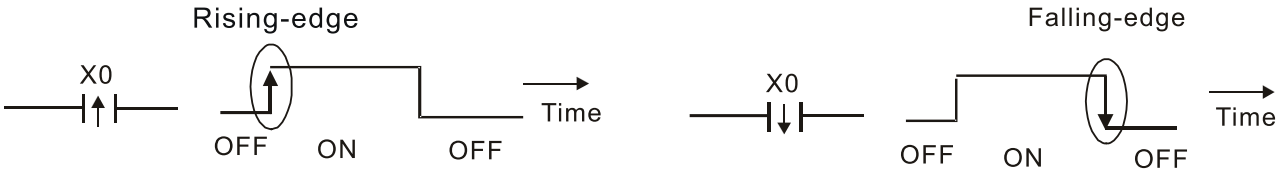

2. **AND (ANI) command:** A series configuration in which a single device is connected with one device or a block.

ANDP, ANDF also have structures like this, but their action occurs at the rising and falling edge.

3. **OR (ORI) command:** A single device is connected with one device or a block.

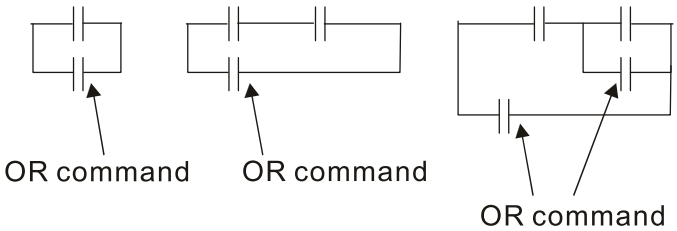

ORP, ORF also have identical structures, but their action occurs at the rising and falling edge.

4. **ANB command:** A configuration in which one block is in series with one device or block.

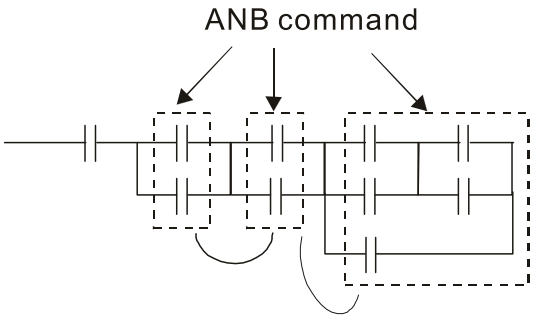

5. **ORB command:** A configuration in which one block is in parallel with one device or block.

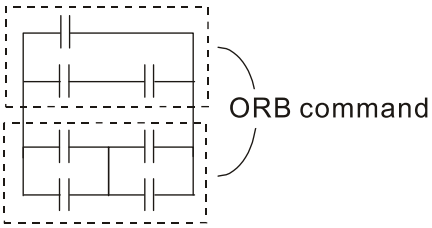

In the case of ANB and ORB operations, if a number of blocks are connected, they should be combined to form a block or network from the top down or from left to right.

6. **MPS, MRD, MPP commands:** Branching point memory for multiple outputs, enabling multiple, different outputs. The MPS command begins at a branching point, where the so-called branching point refers to the intersection of horizontal and vertical lines. We have to rely on the contact status along a single vertical line to determine whether the next contact can give a memory command. While each contact is basically able to give memory commands, in view of convenience and the PLC's capacity restrictions, this can be omitted from some places when converting a ladder diagram. The structure of the ladder diagram can be used to judge what kinds of contact memory commands are used.
   - MPS can be distinguished by use of the "┬" symbol; this command can be used consecutively for up to 8 times. The MRD command is read from branching point memory; because logic states along any one vertical line must be the same, in order to continue analysis of other ladder diagrams, the original contact status must be read.
   - MRD can be distinguished by use of the "├" symbol. The MPP command is read from the starting state of the uppermost branching point, and it is read from the stack (pop); because it is the final command along a vertical line, it indicates that the state of the vertical line can be concluded.
   - MPP can be distinguished by use of the "└" symbol. Although there should basically be no errors when using the foregoing analytical approach, the compiling program may sometimes omit identical state output, as shown in the following figure:

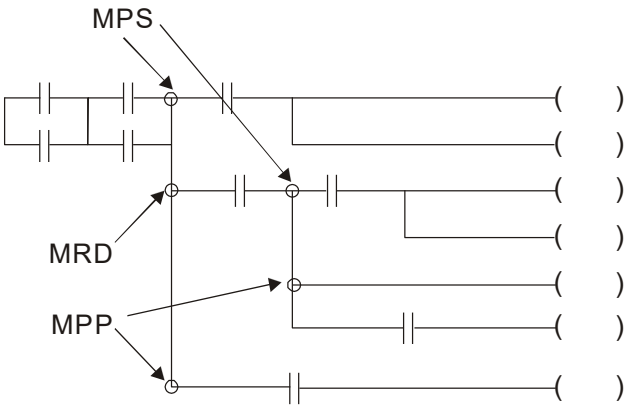

16-4-4 Commonly used basic program design examples

Start, stop, and protection

Some applications may require a brief close or brief break using the buttons to start and stop equipment. A protective circuit must therefore be designed to maintain continued operation in these situations; this protective circuit may employ one of the following methods:

Example 1: Priority stop protective circuit

When the start N.O. contact X1 = ON, and the stop N.C. contact X2 = OFF, Y1 = ON; if X2 = ON at this time, coil Y1 will no longer be electrified, and this is therefore referred to as priority stop.

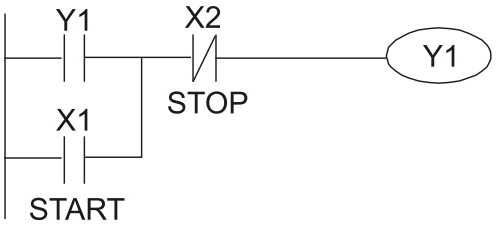

Example 2: Priority start protective circuit

When start N.O. contact X1 = ON, and the stop N.C. contact X2 = OFF, Y1 = ON, and coil Y1 will be electrified and protected. At this time, if X2 = ON, coil Y1 will still protect the contact and continue to be electrified, and this is therefore priority start.

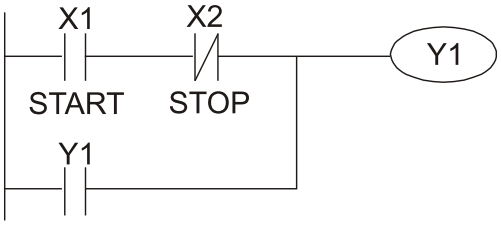

Example 3: Setting (SET) and reset (RST) command protective circuit

The following figure shows a protective circuit composed of RST and SET commands. Priority stop occurs when the RST command is placed after the SET command. Because the PLC executes programs from the top down, at the end of the program, the state of Y1 will indicate whether coil Y1 is electrified. When X1 and X2 are both actuated, Y1 will lose power, and this is therefore priority stop.

Priority start occurs when the SET command is placed after the RST command. When X1 and X2 are both actuated, Y1 will be electrified, and this is therefore priority start.

Top priority of stop

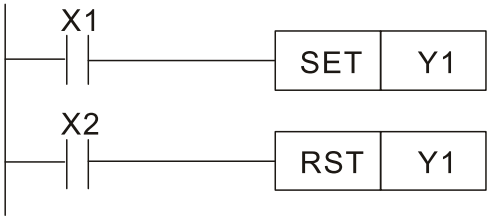

Top priority of start

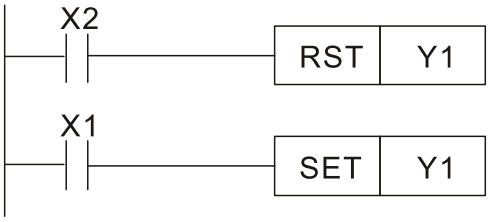

Commonly used control circuits

Example 4: Conditional control

X1, X3 are respectively start/ stop Y1, and X2 & X4 are respectively start/ stop Y2; all have protective circuits. Because Y1's N.O. contact is in series with Y2's circuit, it becomes an AND condition for the actuation of Y2. The action of Y1 is therefore a condition for the action of Y2, and Y1 must be actuated before Y2 can be actuated.

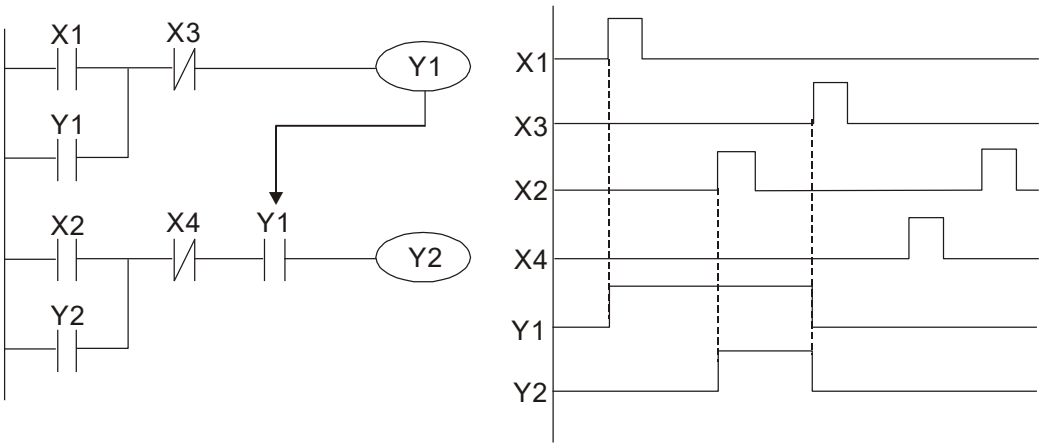

Example 5: Interlocking control

The figure below shows an interlocking control circuit. Depending on which of the start contacts X1, X2 is valid first, the corresponding output Y1 or Y2 will be actuated, and when one is actuated, the other will not be actuated. This implies that Y1 and Y2 cannot be actuated at the same time (interlocking effect). Even if both X1 and X2 are valid at the same time, because the ladder diagram program is scanned from the top down, it is impossible for Y1 and Y2 to be actuated at same time. This ladder diagram assigns priority only to Y1.

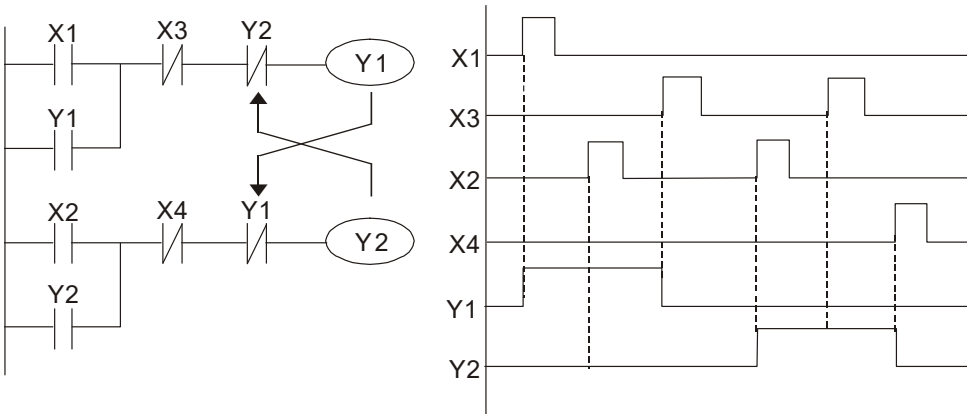

Example 6: Sequence control

If the NC contact of Y2 in the interlocking control configuration of example 5 is put in series with the Y1 circuit, so that it is an AND condition for actuation of Y1 (see figure below), not only is Y1 a condition for the actuation of Y2 in this circuit, the actuation of Y2 will also stop the actuation of Y1. This configuration confirms the actuation order of Y1 and Y2.

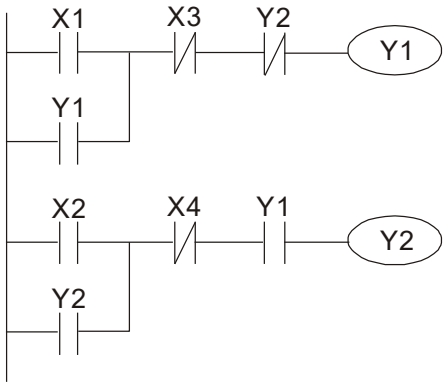

Example 7: Oscillating circuit

Oscillating circuit with a period of ΔT+ΔT

The figure below shows a very simple ladder diagram. When starting to scan the Y1 NC contact, because the Y1 coil has lost power, the Y1 NC contact will be closed. When the Y1 coil is then scanned, it will be electrified, and the output will be 1. When the Y1 NC contact is scanned in the scanning cycle, because Y1 coil is electrified, the Y1 NC contact will be opened, the Y1 coil will then lose power, and the output will be 0. Following repeated scanning, the output of Y1 coil will have an oscillating waveform with a period of ΔT (On) +ΔT (Off).

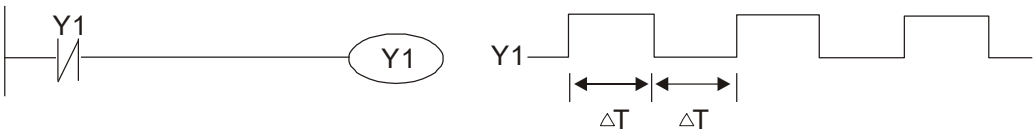

Oscillating circuit with a period of nT+ΔT

The program of the ladder diagram shown below uses timer T0 to control coil Y1's electrified time. After Y1 is electrified, it causes timer T0 to close during the next scanning cycle, which will cause the output from Y1 to have the oscillating waveform shown in the figure below. Here n is the timer's decimal setting value, and T is the clock cycle of the timer.

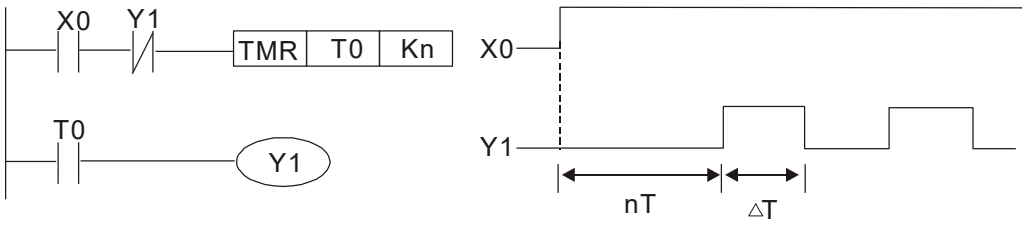

Example 8: Flashing circuit

The following figure shows an oscillating circuit of a type commonly used to cause an indicator light to flash or a buzzer to buzz. It uses two timers to control the ON and OFF time of Y1 coil. Here n1, n2 are the timing set values of T1 and T2, and T is the clock cycle of the timer.

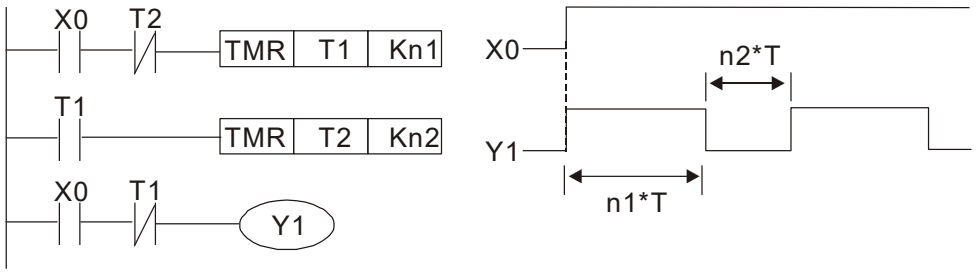

Example 9: Triggering circuit

In the figure below, a command consisting of the differential of the rising edge of X0 causes coil M0 to generate a single pulse for ΔT (length of one scanning cycle), and coil Y1 is electrified during this scanning cycle. Coil M0 loses power during the next scanning cycle, and N.C. contact M0 and N.C. contact Y1 are both closed. This causes coil Y1 to stay in an electrified state until there is another rising edge in input X0, which again causes the electrification of coil M0 and the start of another scanning cycle, while also causing coil Y1 to lose power, etc. The sequence of these actions can be seen in the figure below. This type of circuit is commonly used to enable one input to perform two actions in alternation. It can be seen from the time sequence in the figure below that when input X0 is a square wave signal with a period of T, the output of coil Y1 will be a square wave signal with a period of 2T.

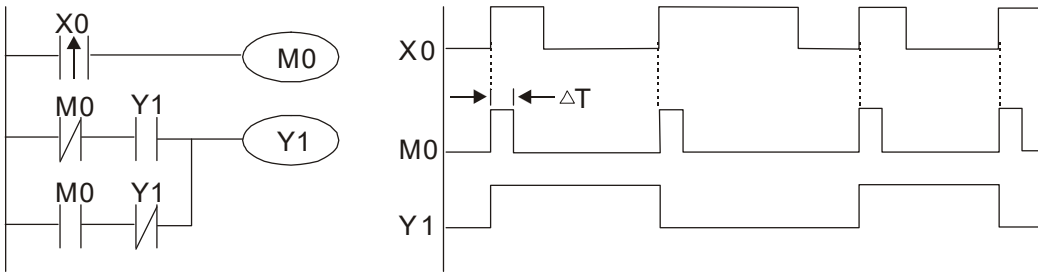

Example 10: Delay circuit

When input X0 is ON, because the corresponding N.C. contact will be OFF, the timer T10 will be in no power status, and output coil Y1 will be electrified. T10 will receive power and begin timing only after input X0 is OFF, and output coil Y1 will be delayed for 100 sec. (K1000 × 0.1 sec. =100 sec.) before losing power; please refer to the sequence of actions in the figure below.

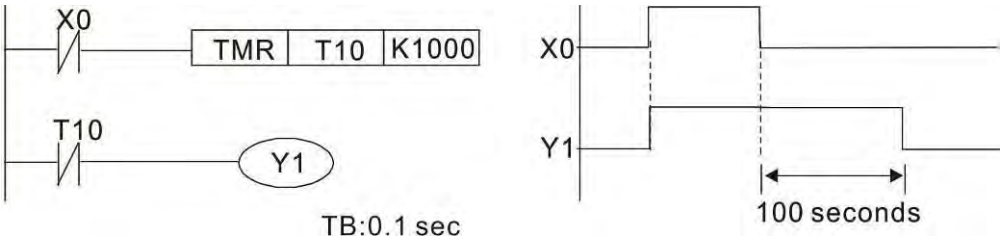

Example 11: The open / close delay circuit is composed of two timers; output Y4 will have a delay whether input X0 is ON or OFF.

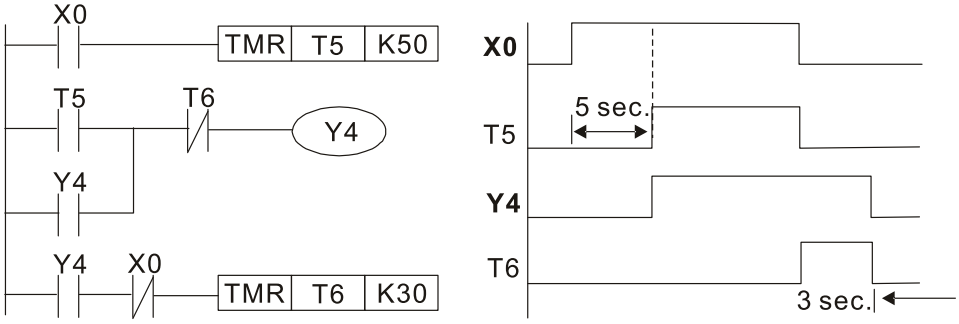

Example 12: Extended timing circuit

In the circuit in the figure on the left, the total delay time from the moment input X0 closes to the time output Y1 is electrified is (n1 + n2) × T, where T is the clock cycle. Timers: T11, T12; clock cycle: T.

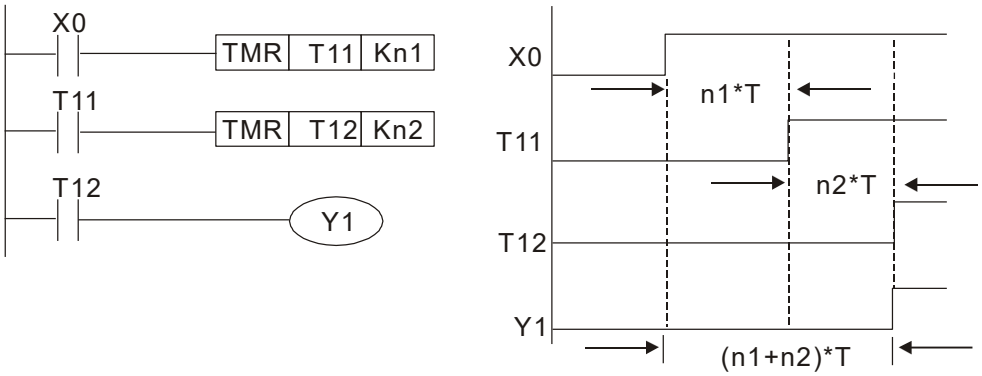

16-5 Various PLC Device Functions

Item	Specifications	Notes
Algorithmic Control Method	Program stored internally, alternating back-and-forth scanning method	
Input / Output Control Method	When it starts again after ending (after execution to the END command), the input/ output has an immediate refresh command	
Algorithmic Processing Speed	Basic commands (several μs);	Applications command (1 to several tens of μs)
Programming Language	Command + ladder diagram	
Program Capacity	10000 steps	
Input/ Output Terminal	Input (X): 10, output (Y): 4	This number of contacts constitutes CH2000 input/ output contacts; other devices have different correspondences

Type	Device	Item		Range		Function
Relay bit form	X	External input relay		X0–X17, 16 points, octal number	Total 32 points	Corresponds to external input point
	Y	External output relay		Y0–Y17, 16 points, octal number		Corresponds to external output point
	M	Auxiliary Relay	General Use	M0–M799, 800 points	Total 880 points	Contact can switch ON / OFF within the program
			Special purpose	M1000–M1079, 80 points		
	T	Timer	100ms timer	T0–T159, 160 points	Total 160 points	Timers referred to by the TMR command; contact of the T with the same number will go ON when the time is reached
	C	Counter	16-bit counter, general use	C0–C79, 80 points	Total 80 points	Counter referred to by the CNT command; contact of the C with the same number will go ON when the count is reached
Register word data	T	Current timer value		T0–T159, 160 points		The contact will be ON when the time is reached
	C	Current counter value		C0–C79, 16-bit counter 80 points		The counter contact will come On when the count is reached
	D	Data Register	Used to maintain power Off	D0–D399, 400 points	Total 1400 points	Used as data storage memory area
			Special purpose	D1000–D1199, 200 points D2000–D2799, 800 points		
Constant	K	Decimal	Single-byte	Setting Range: K-32,768–K32,767		
			Double-byte	Setting Range: K-2,147,483,648–K2,147,483,647		
	H	Hexadecimal	Single-byte	Setting Range:H0000–HFFFF		
			Double-byte	Setting Range: H00000000–HFFFFFFFF		
Serial communications port (program write/read)				RS-485/ keypad port		
Input/output				Built-in three analog inputs and two analog outputs		
Function expansion module			Optional Accessories	EMC-D42A; EMC-R6AA; EMCD611A		
Communication Expansion Module			Optional Accessories	EMC-COP01,(CANopen)		

16-5-1 Introduction to device functions

Input / output contact functions

Input contact X functions: Input contact X is connected with an input device, and reads input signals entering the PLC. The number of times that contact a or b of input contact X is used in the program is not subject to restrictions. The ON / OFF state of input contact X will change as the input device switches ON and OFF; a peripheral device (WPLSoft) cannot be used to force contact X ON or OFF.

Output contact Y functions

The job of output contact Y is to send an ON / OFF signal to drive the load connected with output contact Y. Output contacts consist of two types: relays and transistors. While number of times that contact a or b of each output contact Y is used in the program is not subject to restrictions, it is recommended that the number of output coil Y be used only once in a program, otherwise the right to determine the output state when the PLC performs program scanning will be assigned to the program's final output Y circuit.

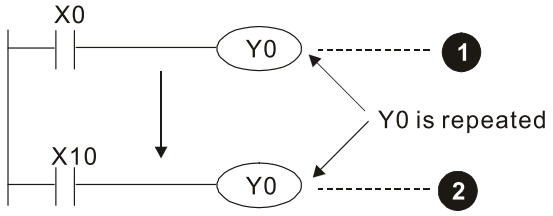

The output of Y0 will be decided by circuit ❷ ,
i.e. decided by ON/OFF of X10.

Numerical value, constant [K] / [H]

Constant	Single-byte	K	Decimal	K-32,768–K32,767
	Double-byte			K-2,147,483,648–K2,147,483,647
	Single-byte	H	Hexadecimal	H0000–HFFFF
	Double-byte			H00000000–HFFFFFFFF

The PLC can use five types of numerical values to implement calculations based on its control tasks; the following is an explanation of the missions and functions of different numerical values.

Binary Number, BIN

The PLC's numerical operations and memory employ binary numbers. Binary nibbles and relevant terms are explained as follows:

bit	Bits are the fundamental units of binary values, and have a state of either 1 or 0
Nibble	Comprised of a series of 4 bits (such as b3–b0); can be used to express a one-nibble decimal number 0–9 or hexadecimal number: 0–F.
Byte	Comprised of a series of two nibbles (i.e. 8 bits, b7–b0); can express a hexadecimal number: 00–FF.
Word	Comprised of a series of two bytes (i.e. 16 bits, b15–b0); can express a hexadecimal number with four nibbles: 0000–FFFF.
Double Word	Comprised of a series of two words (i.e. 32 bits, b31–b0); can express a hexadecimal number with eight nibbles: 00000000–FFFFFFFF

Relationship between bits, digits, nibbles, words, and double words in a binary system (see figure below):

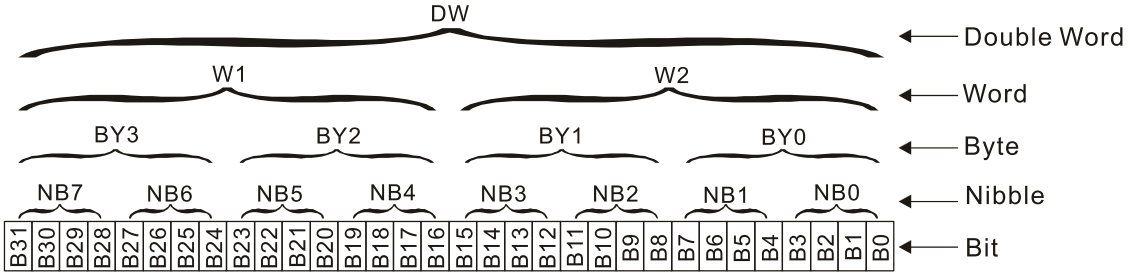

Octal Number, OCT

The external input and output terminals of a DVP-PLC are numbered using octal numbers

Example: External input: X0–X7，X10–X17…(Device number table);

External output: Y0–Y7，Y10–Y17…(Device number table)

Decimal Number, DEC

Decimal numbers are used for the following purposes in a PLC system:

- The setting values of timer T or counter C, such as TMR C0 K50. (K constant)
- The numbers of devices including M, T, C, or D, such as M10 or T30. (device number)
- Used as an operand in an application command, such as MOV K123 D0. (K constant)

Binary Code Decimal, BCD

Uses one nibble or 4 bits to express the data in a decimal number; a series of 16 bits can therefore express a decimal number with 4 nibbles. Chiefly used to read the input value of a fingerwheel numerical switch input or output a numerical value to a seven-segment display drive.

Hexadecimal Number, HEX

Applications of hexadecimal numbers in a PLC system: Used as operands in application commands, such as MOV H1A2B D0. (H constant)

Constant K

Decimal numbers are usually prefixed with a "K" in a PLC system, such as K100. This indicates that it is a decimal number with a numerical value of 100.

Exceptions: K can be combined with bit device X, Y, M, or S to produce data in the form of a nibble, byte, word, or double word, such as in the case of K2Y10 or K4M100. Here K1 represents a 4-bit combination, and K2–K4 variously represent 8, 12, and 16-bit combinations.

Constant H

Hexadecimal numbers are usually prefixed with the letter "H" in a PLC system, such as in the case of H100, which indicates a hexadecimal number with a numerical value of 100.

Functions of auxiliary relays

Like an output relay Y, an auxiliary relay M has an output coil and contacts a and b, and the number of times they can be used in a program is unrestricted. Users can use an auxiliary relay M to configure the control circuit but cannot use it to directly drive an external load. Auxiliary relays have the following two types of characteristics:

- Ordinary auxiliary relays: Ordinary auxiliary relays will all revert to the OFF state if a power outage occurs while the PLC is running and will remain in the OFF state if power is again turned down. Special purpose auxiliary relays: Each special purpose auxiliary relay has its own specific use. Do not use any undefined special purpose auxiliary relays.

Timer functions

Timers take 100 ms as their timing units. When the timing method is an upper time limit, when the current timer value = set value, power will be sent to the output coil. Timer setting values consist of decimal K values, and the data register D can also serve as a setting value.

Actual timer setting time = timing units × set value

Counter features

Item	16-bit counter
Type	General Type
CT Direction:	Score
Setting	0–32,767
Designation of set value	Constant K or data register D
Change in current value	When the count reaches the set value, there is no longer a count
Output contact	When the count reaches the set value, the contact comes On and stays On
Reset	The current value reverts to 0 when an RST command is executed, and the contact reverts to Off
Contact actuation	All are actuated after the end of scanning

Counter functions

When a counter's counting pulse input signal goes OFF→ON, if the counter's current value is equal to the set value, the output coil will come ON. The setting value will be a decimal K values, and the data register D can also serve as a setting value.

16-bit counter C0–C79:

- 16-bit counter setting range: K0–K32,767. (When K0 and K1 are identical, the output contact will immediately be ON during the first count.)
- The current counter value will be cleared from an ordinary counter when power is shut off to the PLC.
- If the MOV command or WPLSoft is used to transmit a value greater than the set value to the C0 current value register, when the next X1 goes from OFF→ON, the C0 counter contact will change to ON, and the current value will change to the set value.
- A counter's setting value may be directly set using a constant K or indirectly set using the value in register D (not including special data registers D1000–D1199 or D2000–D2799).
- If the set value employs a constant K, it may only be a positive number; the set value may be either a positive or a negative number if the value in data register D is used. The current counter value will change from 32,767 to -32,768 as the count continues to accumulate.

Example

```
LD      X0
RST     C0
LD      X1
CNT     C0   K5
LD      C0
OUT     Y0
```

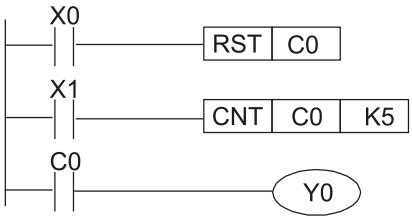

1. When X0 = ON and the RST command is executed, the current value of C0 will revert to 0, and the output contact will revert to OFF.
2. When X1 changes from OFF→ON, the current value of the counter will execute an increase (add one).
3. When the count of counter C0 reaches the set value K5, the contact C0 will come ON, and the current value of C0 = set value = K5. Afterwards, signal C0 triggered by X1 cannot be received, and the current value of C0 will remain K5.

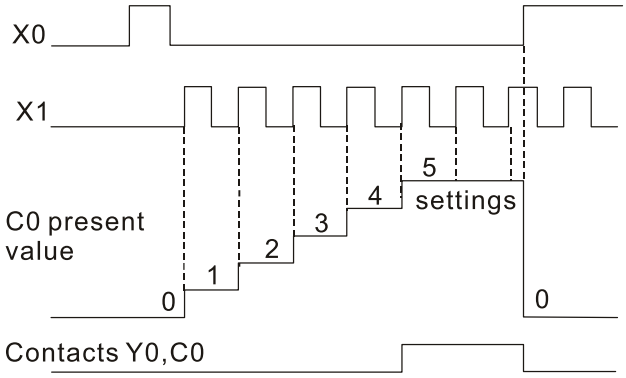

16-5-2 Introduction to special relay functions (special M)

R/W items: RO: read only function; RW: read and write function

Special M	Description of Function	R/W *
M1000	Operates monitor N.O. contact (contact a). N.O. while RUN, contact a. This contact is ON while in the RUN state.	RO
M1001	Operates monitor N.C. contact (contact b). N.C. while RUN, contact b. This contact is OFF while in the RUN state.	RO
M1002	Initiates a forward (the instant RUN is ON) pulse. Initial pulse, contact a. Produces a forward pulse the moment RUN begins; its width = scan cycle	RO
M1003	Initiates a reverse (the instant RUN is OFF) pulse. Initial pulse, contact a. Produces a reverse pulse the moment RUN ends; the pulse width = scan cycle	RO
M1004	Reserved	RO
M1005	Drive malfunction instructions	RO
M1006	Converter has no output (1 = no output, 0 = output)	RO
M1007	Drive direction FWD(0)/REV(1)	RO
M1008 – M1010	--	--
M1011	10 ms clock pulse, 5ms ON / 5ms OFF	RO
M1012	100 ms clock pulse, 50ms ON / 50ms OFF	RO
M1013	1 sec. clock pulse, 0.5s ON / 0.5s OFF	RO
M1014	1 min. clock pulse, 30s ON / 30s OFF	RO
M1015	Frequency attained (when used together with M1025)	RO
M1016	Parameter read/write error	RO
M1017	Parameter write successful	RO
M1018	--	--
M1019	Drive warning indication	--
M1020	Zero flag	RO
M1021	Borrow flag	RO

Special M	Description of Function	R/W *
M1022	Carry flag	RO
M1023	Divisor is 0	RO
M1024	--	--
M1025	Target drive frequency = set frequency (ON) Target drive frequency = 0 (OFF)	RW
M1026	Drive operating direction FWD(OFF) / REV(ON)	RW
M1027	Drive Reset	RW
M1028	--	--
M1029	--	--
M1030	--	--
M1031	Compulsory setting of the current PID integral value equal to D1019 (0 change, 1 valid)	RW
M1032	Compulsory definition of FREQ command after PID control	RW
M1033	--	--
M1034	Initiates CANopen real-time control	RW
M1035	Initiates internal communications control	RW
M1036	Ignore calendar error	RW
M1037	--	--
M1038	MI8 count begins	RW
M1039	Reset MI8 count value	RW
M1040	Excitation (Servo On)	RW
M1041	--	--
M1042	Quick stop	RW
M1043	--	--
M1044	Pause (Halt)	RW
M1045 – M1047	--	--
M1048	Move to new position	RW
M1049	--	--
M1050	Absolute position / relative position (0: relative/1: absolute)	RW
M1051	--	--
M1052	Lock frequency (lock, frequency locked at the current operating frequency)	RW
M1053	--	--
M1054	Compulsory reset of absolute position	RW
M1055	Search Origin	RW
M1056	Excitation ready (Servo On Ready)	RO
M1057	--	--
M1058	On Quick Stopping	RO
M1059	CANopen Master setting complete	RO
M1060	CANopen Currently initializing slave station	RO
M1061	CANopen Slave station initialization failure	RO
M1062	--	--
M1063	Torque attained	RO
M1064	Target reached	RO
M1065	Read/write CANopen data time out	RO
M1066	Read/write CANopen data complete	RO
M1067	Read/write CANopen data successful	RO
M1068	Calendar calculation error	RO
M1069	--	--
M1070	Return home complete	RO
M1071	Homing error	RO
M1072 – M1075	--	--
M1076	Calendar time error or refresh time out	RO

Special M	Description of Function	R/W *
M1077	485 Read/write complete	RO
M1078	485 Read-write error	RO
M1079	485 Communications time out	RO
M1090	AUTO	RO
M1091	OFF	RO
M1092	HAND	RO
M1100	LOCAL	RO
M1101	REMOTE	RO
M1168	SBOV BCD and BIN mode switch	RW
M1260	PLC PID1 Enable	RW
M1262	PLC PID1 integral positive value limit	RW
M1270	PLC PID2 Enable	RW
M1272	PLC PID2 integral positive value limit	RW

16-5-3 Introduction to special register functions (special D)

Special D	Description of Function	R/W *
D900 – D999	CANopen PDO and SDO mapping	RW
D1000	--	--
D1001	Device system program version	RO
D1002	Program capacity	RO
D1003	Total program memory content	RO
D1004 – D1009	--	--
D1010	Current scan time (units: 0.1 ms)	RO
D1011	Minimum scan time (units: 0.1 ms)	RO
D1012	Maximum scan time (units: 0.1 ms)	RO
D1013 – D1017	--	--
D1018	Current integral value	RO
D1019	Compulsory setting of PID I integral	RW
D1020	Output frequency (0.000–600.00Hz)	RO
D1021	Output current (####.#A)	RO
D1022	AI AO DI DO Expansion card number 0: No expansion card 4: AC input card (6 in) (EMC-D611A) 5: Digital I/O Card (4 in 2 out) (EMC-D42A) 6: Relay card (6 out) (EMC-R6AA) 11: Analog I/O Card (2 in 2 out) (EMC-A22A)	RO
D1023	Communication expansion card number 0: No expansion card 1: DeviceNet Slave (CMC-DN01) 2: Profibus-DP Slave (CMC-PD01) 3: CANopen Slave (EMC-COP01) 5: EtherNet/IP Slave (CMC-EIP01) 12: PROFINET Slave (CMC-PN01)	RO
D1024 – D1026	--	--
D1027	PID calculation frequency command (frequency command after PID calculation)	RO
D1028	AVI value (0.00–100.00%)	RO
D1029	ACI value (0.0–100.00%)	RO
D1030	AUI value (-100.0–100.00%)	RO

Special D	Description of Function	R/W *
D1031	C series: extension card AI10 (0.0–100.0%)	RO
D1032	C series: extension card AI11 (0.0–100.0%)	RO
D1033 – D1035	--	--
D1036	Servo error bit	RO
D1037	Drive output frequency	RO
D1038	DC bus voltage	RO
D1039	Output voltage	RO
D1040	Analog output value AFM1 (-100.00–100.00%)	RW
D1041	C series: extension card AO10 (0.0–100.0%)	RW
D1042	C series: extension card AO11 (0.0–100.0%)	RW
D1043	Can be user-defined (will be displayed on panel when Pr. 00-04 is set as 28; display method is C xxx)	RW
D1044	--	-
D1045	Analog output value AFM2 (-100.00–100.00%)	RW
D1046 – D1049	--	--
D1050	Actual Operation Mode 0: Speed 1: Position 2: Torque 3: Homing Origin	RO
D1051	Encoder Pulses L	RO
D1052	Encoder Pulses H	RO
D1053	Actual torque	RO
D1054	MI8 current calculated count value (Low Word)	RO
D1055	MI8 current calculated count value (High Word)	RO
D1056	Rotational speed corresponding to MI8	RO
D1057	MI8's rotational speed ratio	RW
D1058	MI8 refresh rate (ms) corresponding to rotational speed	RW
D1059	Number of nibbles of rotational speed corresponding to MI8 (0–3)	RW
D1060	Operation Mode setting 0: Speed 1: Position 2: Torque 3: Homing Origin	RW
D1061	485 COM1 communications time out time (ms)	RW
D1062	Torque command (torque limit in speed mode)	RW
D1063	Year (Western calendar) (display range 2000–2099) (must use KPC-CC01)	RO
D1064	Week (display range 1–7) (must use KPC-CC01)	RO
D1065	Month (display range 1–12) (must use KPC-CC01)	RO
D1066	Day (display range 1–31) (must use KPC-CC01)	RO
D1067	Hour (display range 0–23) (must use KPC-CC01)	RO
D1068	Minute (display range 0–59) (must use KPC-CC01)	RO
D1069	Second (display range 0–59) (must use KPC-CC01)	RO
D1100	Target frequency	RO
D1101	Target frequency (must be operating)	RO
D1102	Reference frequency	RO
D1103	Target L	RO
D1104	Target H	RO
D1105	Target torque	RO
D1106	--	--
D1107	π(Pi) Low word	RO

Special D	Description of Function	R/W *
D1108	π(Pi) High word	RO
D1109	Random number	RO
D1110	Internal node communications number (set number of slave stations to be controlled)	RW
D1111	Actual position (Low word)	RO
D1112	Actual position (High word)	RO
D1113	--	RO
D1114	--	--
D1115	Internal node synchronizing cycle (ms)	RO
D1116	Internal node error (bit0 = Node 0, bit1 = Node 1,…bit7 = Node 7)	RO
D1117	Internal node online correspondence (bit0 = Node 0, bit1 = Node 1,…bit7 = Node 7)	RO
D1118	--	--
D1119	--	--
D1120	Internal node 0 control command	RW
D1121	Internal node 0 mode	RW
D1122	Internal node 0 reference command L	RW
D1123	Internal node 0 reference command H	RW
D1124	--	--
D1125	--	--
D1126	Internal node 0 status	RO
D1127	Internal node 0 reference status L	RO
D1128	Internal node 0 reference status H	RO
D1129	--	--
D1130	Internal node 1 control command	RW
D1131	Internal node 1 mode	RW
D1132	Internal node 1 reference command L	RW
D1133	Internal node 1 reference command H	RW
D1134	--	--
D1135	--	--
D1136	Internal node 1 status	RO
D1137	Internal node 1 reference status L	RO
D1138	Internal node 1 reference status H	RO
D1139	--	--
D1140	Internal node 2 control command	RW
D1141	Internal node 2 mode	RW
D1142	Internal node 2 reference command L	RW
D1143	Internal node 2 reference command H	RW
D1144	--	--
D1145	--	--
D1146	Internal node 2 status	RO
D1147	Internal node 2 reference status L	RO
D1148	Internal node 2 reference status H	RO
D1149	--	--
D1150	Internal node 3 control command	RW
D1151	Internal node 3 mode	RW
D1152	Internal node 3 reference command L	RW
D1153	Internal node 3 reference command H	RW
D1154	--	--
D1155	--	--
D1156	Internal node 3 status	RO
D1157	Internal node 3 reference status L	RO
D1158	Internal node 3 reference status H	RO
D1159	--	--
D1160	Internal node 4 control command	RW

Special D	Description of Function	R/W *
D1161	Internal node 4 mode	RW
D1162	Internal node 4 reference command L	RW
D1163	Internal node 4 reference command H	RW
D1164	--	--
D1165	--	--
D1166	Internal node 4 status	RO
D1167	Internal node 4 reference status L	RO
D1168	Internal node 4 reference status H	RO
D1169	--	--
D1170	Internal node 5 control command	RW
D1171	Internal node 5 mode	RW
D1172	Internal node 5 reference command L	RW
D1173	Internal node 5 reference command H	RW
D1174	--	RW
D1175	--	--
D1176	Internal node 5 status	--
D1177	Internal node 5 reference status L	RO
D1178	Internal node 5 reference status H	RO
D1179	--	--
D1180	Internal node 6 control command	RW
D1181	Internal node 6 mode	RW
D1182	Internal node 6 reference command L	RW
D1183	Internal node 6 reference command H	RW
D1184	--	--
D1185	--	--
D1186	Internal node 6 status	RO
D1187	Internal node 6 reference status L	RO
D1188	Internal node 6 reference status H	RO
D1189	--	--
D1190	Internal node 7 control command	RW
D1191	Internal node 7 mode	RW
D1192	Internal node 7 reference command L	RW
D1193	Internal node 7 reference command H	RW
D1194	--	--
D1195	--	--
D1196	Internal node 7 status	RO
D1197	Internal node 7 reference status L	RO
D1198	Internal node 7 reference status H	RO
D1199	--	--

Special D	Description of Function	Default	R/W *
D1200	PID 1 Mode: 0: Basic mode	0	RW
D1201	PID 1 Target selection: 0: Refer to D1202 1: AVI 2: ACI 3: AUI	0	RW
D1202	PID 1 Target value (0.00%–100.00%)	5000	RW
D1203	PID 1 Feedback selection: 0: Refer to D1204 1: AVI 2: ACI 3: AUI	1	RW
D1204	PID 1 Feedback value (0.00%–100.00%)	0	RW

Special D	Description of Function	Default	R/W *
D1205	PID 1 P value (decimal 2 points)	10	RW
D1206	PID 1 I value (decimal 2 points)	1000	RW
D1207	PID 1 D value (decimal 2 points)	0	RW
D1209	PID 1 Max. limit	10000	RW
D1215	PID 1 Calculation (decimal 2 points)	0	RO
D1220	PID2 Mode: 0: Basic mode	0	RW
D1221	PID 2 Target selection: 0: Refer to D1202 1: AVI 2: ACI 3: AUI	0	RW
D1222	PID 2 Target value (0.00%–100.00%)	5000	RW
D1223	PID 2 Feedback selection: 0: Refer to D1204 1: AVI 2: ACI 3: AUI	1	RW
D1224	PID 2 Feedback value (0.00%–100.00%)	0	RW
D1225	PID 2 P value (decimal 2 points)	10	RW
D1226	PID 2 I value (decimal 2 points)	1000	RW
D1227	PID 2 D value (decimal 2 points)	0	RW
D1229	PID 2 Max. limit	10000	RW
D1235	PID 2 Calculation (decimal 2 points)	0	RO

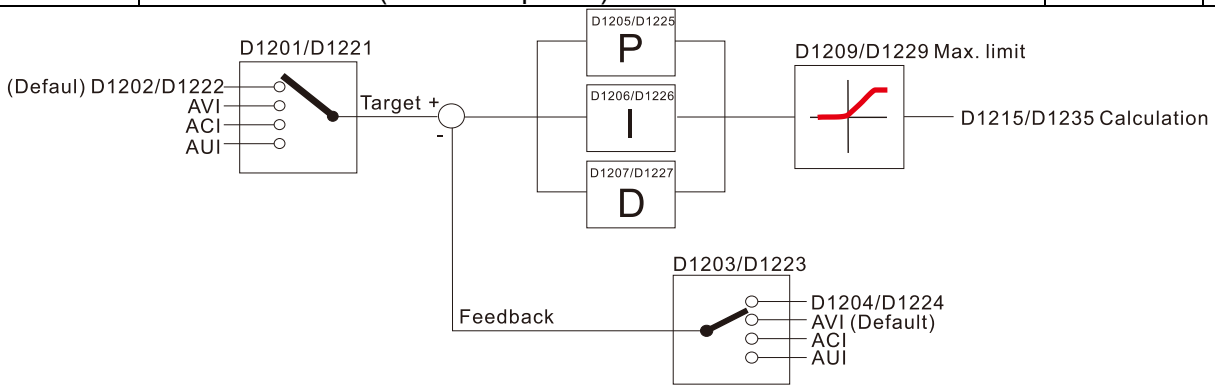

The following is CANopen Master's special D (Allow writing only when PLC is in STOP state)

n = 0–7

Special D	Description of Function	PDO Map	Power off Memory	Default	R/W
D1070	Channel opened by CANopen initialization (bit0 = Machine code0 …)	NO	NO	0	R
D1071	Error channel occurring in CANopen initialization process (bit0 = Machine code0 …)	NO	NO	0	R
D1072	Reserved	-	-		-
D1073	CANopen break channel (bit0 = Machine code0 …)	NO	NO		R
D1074	Error code of master error 0: No error 1: Slave station setting error 2: Synchronizing cycle setting error (too small)	NO	NO	0	R
D1075	Reserved	-	-		-
D1076	SDO error message (main index value)	NO	NO		R
D1077	SDO error message (secondary index value)	NO	NO		R
D1078	SDO error message (error code)	NO	NO		R

Special D	Description of Function	PDO Map	Power off Memory	Default	R/W
D1079	SDO error message (error code)	NO	NO		R
D1080	Reserved	-	-		-
D1081 – D1086	Reserved	-	-		-
D1087 – D1089	Reserved	-	-		-
D1090	Synchronizing cycle setting	NO	YES	4	RW
D1091	Sets slave station ON or OFF (bit 0–bit 7 correspond to slave stations number 0–7)	NO	YES	FFFFH	RW
D1092	Delay before start of initialization	NO	YES	0	RW
D1093	Break time detection	NO	YES	1000ms	RW
D1094	Break number detection	NO	YES	3	RW
D1095 – D1096	Reserved	-	-		-
D1097	Corresponding real-time transmission type (PDO) Setting range: 1–240	NO	YES	1	RW
D1098	Corresponding real-time receiving type (PDO) Setting range: 1–240	NO	YES	1	RW
D1099	Initialization completion delay time Setting range: 1–60000 sec.	NO	YES	15 sec.	RW
D2000+100*n	Station number n of slave station Setting range: 0–127 0: No CANopen function	NO	YES	0	RW

The CH2000 supports 8 slave stations under the CANopen protocol; each slave station occupies 100 special D locations; stations are numbered 1–8, total of 8 stations.

Explanation of slave station number

Slave station no. 1	D2000	Node ID
	D2001	Slave station no. 1 torque restrictions
	–	–
	D2099	Address 4(H) corresponding to receiving channel 4
Slave station no. 2	D2100	Node ID
	D2101	Slave station no. 2 torque restrictions
	–	–
	D2199	Address 4(H) corresponding to receiving channel 4
Slave station no. 3	D2200	Node ID
	D2201	Slave station no. 3 torque restrictions
	–	–
	D2299	Address 4(H) corresponding to receiving channel 4
	⇩	
Slave station no. 8	D2700	Node ID
	D2701	Slave station no. 8 torque restrictions
	–	–
	D2799	Address 4(H) corresponding to receiving channel 4

1. The range of n is 0–7
2. ●Indicates PDOTX, ▲Indicates PDORX; unmarked special D can be refreshed using the CANFLS command

Special D	Description of Function	Default:	R/W
D2000+100*n	Station number n of slave station Setting range: 0–127 0: No CANopen function	0	RW
D2002+100*n	Manufacturer code of slave station number n (L)	0	R
D2003+100*n	Manufacturer code of slave station number n (H)	0	R
D2004+100*n	Manufacturer's product code of slave station number n (L)	0	R
D2005+100*n	Manufacturer's product code of slave station number n (H)	0	R

Basic Definitions

Special D	Description of Function	Default:	PDO Mapping	PDO Default:				R/W
				1	2	3	4	
D2006+100*n	Communications break handling method of slave station number n	0	6007H–0010H					RW
D2007+100*n	Error code of slave station number n error	0	603FH–0010H					R
D2008+100*n	Control word of slave station number n	0	6040H–0010H	●		●	●	RW
D2009+100*n	Status word of slave station number n	0	6041H–0010H	▲		▲	▲	R
D2010+100*n	Control mode of slave station number n	2	6060H–0008H					RW
D2011+100*n	Actual mode of slave station number n	2	6061H–0008H					R

Velocity Control

Slave station number n=0–7

Special D	Description of Function	Default:	PDO Mapping	PDO Default:				R/W
				1	2	3	4	
D2001+100*n	Torque restriction on slave station number n	0	6072H–0010H					RW
D2012+100*n	Target speed of slave station number n	0	6042H–0010H	●				RW
D2013+100*n	Actual speed of slave station number n	0	6043H–0010H	▲				R
D2014+100*n	Error speed of slave station number n	0	6044H–0010H					R
D2015+100*n	Acceleration time of slave station number n	1000	604FH–0020H					R
D2016+100*n	Deceleration time of slave station number n	1000	6050H–0020H					RW

Torque Control

Slave station number n=0–7

Special D	Description of Function	Default:	PDO Mapping	PDO Default:				R/W
				1	2	3	4	
D2017+100*n	Target torque of slave station number n	0	6071H–0010H				●	RW
D2018+100*n	Actual torque of slave station number n	0	6077H–0010H				▲	R
D2019+100*n	Actual current of slave station number n	0	6078H–0010H					R

Position Control

Slave station number n=0–7

Special D	Description of Function	Default:	PDO Mapping	PDO Default:				R/W
				1	2	3	4	
D2020+100*n	Target of slave station number n (L)	0	607AH–0020H			●		RW
D2021+100*n	Target of slave station number n (H)	0						RW
D2022+100*n	Actual position of slave station number n (L)	0	6064H–0020H			▲		R

Special D	Description of Function	Default:	PDO Mapping	PDO Default:				R/W
				1	2	3	4	
D2023+100*n	Actual position of slave station number n (H)	0						R
D2024+100*n	Speed chart of slave station number n (L)	10000	6081H–0020H					RW
D2025+100*n	Speed chart of slave station number n (H)	0						RW

20XXH correspondences: MI MO AI AO

Slave station number n=0–7

Special D	Description of Function	Default:	PDO Mapping	PDO Default:				R/W
				1	2	3	4	
D2026+100*n	MI status of slave station number n	0	2026H–0110H		▲			RW
D2027+100*n	MO setting of slave station number n	0	2026H–4110H		●			RW
D2028+100*n	AI1 status of slave station number n	0	2026H–6110H		▲			RW
D2029+100*n	AI2 status of slave station number n	0	2026H–6210H		▲			RW
D2030+100*n	AI3 status of slave station number n	0	2026H–6310H		▲			RW
D2031+100*n	AO1 status of slave station number n	0	2026H–A110H		●			RW
D2032+100*n	AO2 status of slave station number n	0	2026H–A210H		●			RW
D2033+100*n	AO3 status of slave station number n	0	2026H–A310H		●			RW

PDO reflection length setting:

Special D	Description of Function	Default:	R/W
D2034+100*n	Real-time transmission setting of slave station number n	000AH	RW
D2067+100*n	Real-time reception setting of slave station number n	0000H	RW

16-5-4 PLC Communication address

Device	Range	Type	Address (Hex)
X	00–37 (Octal)	bit	0400–041F
Y	00–37 (Octal)	bit	0500–051F
T	00–159	bit/word	0600–069F
M	000–799	bit	0800–0B1F
M	1000–1079	bit	0BE8–0C37
C	0–79	bit/word	0E00–0E47
D	00–399	word	1000–118F
D	1000–1099	word	13E8–144B
D	2000–2799	word	17D0–1AEF

Command code that can be used

Function Code	Description of Function	Function target
01	Coil status read	**Y,M,T,C**
02	Input status read	X,Y,M,T,C
03	Read single unit of data	T,C,D
05	Compulsory single coil status change	Y,M,T,C
06	Write single unit of data	T,C,D
0F	Compulsory multiple coil status change	Y,M,T,C
10	Write multiple units of data	T,C,D

NOTE:

When PLC functions have been activated, the CH2000 can match PLC and drive parameters; this method employs different addresses, drives (default station number is 1, PLC sets station number as 2)

16-6 Introduction to the Command Window

16-6-1 Overview of basic commands

Ordinary commands

Command Code	Function	OPERAND	Execution Speed (us)
LD	Load contact a	X, Y, M, T, C	0.8
LDI	Load contact b	X, Y, M, T, C	0.8
AND	Connect contact a in series	X, Y, M, T, C	0.8
ANI	Connect contact b in series	X, Y, M, T, C	0.8
OR	Connect contact a in parallel	X, Y, M, T, C	0.8
ORI	Connect contact b in parallel	X, Y, M, T, C	0.8
ANB	Series circuit block	N/A	0.3
ORB	Parallel circuit block	N/A	0.3
MPS	Save to stack	N/A	0.3
MRD	Stack read (pointer does not change)	N/A	0.3
MPP	Read stack	N/A	0.3

Output command

Command Code	Function	OPERAND	Execution Speed (us)
OUT	Drive coil	Y, M	1
SET	Action continues (ON)	Y, M	1
RST	Clear contact or register	Y, M, T, C, D	1.2

Timer, counter

Command Code	Function	OPERAND	Execution Speed (us)
TMR	16-bit timer	T-K or T-D commands	1.1
CNT	16-bit counter	C-K or C-D (16-bit)	0.5

Main control command

Command Code	Function	OPERAND	Execution Speed (us)
MC	Common series contact connection	N0–N7	0.4
MCR	Common series contact release	N0–N7	0.4

Contact rising edge / falling edge detection command

Command Code	Function	OPERAND	Execution Speed (us)
LDP	Start of forward edge detection action	X, Y, M, T, C	1.1
LDF	Start of reverse edge detection action	X, Y, M, T, C	1.1
ANDP	Forward edge detection series connection	X, Y, M, T, C	1.1
ANDF	Reverse edge detection series connection	X, Y, M, T, C	1.1
ORP	Forward edge detection parallel connection	X, Y, M, T, C	1.1
ORF	Reverse edge detection parallel connection	X, Y, M, T, C	1.1

Upper / lower differential output commands

Command Code	Function	OPERAND	Execution Speed (us)
PLS	Upper differential output	Y, M	1.2
PLF	Lower differential output	Y, M	1.2

Stop command

Command Code	Function	OPERAND	Execution Speed (us)
END	Program conclusion	N/A	0.2

Other commands

Command Code	Function	OPERAND	Execution Speed (us)
NOP	No action	N/A	0.2
INV	Inverse of operation results	N/A	0.2
P	Index	P	0.3

16-6-2 Detailed explanation of basic commands

Command	Function					
LD	Load contact a					
Operand	X0–X17	Y0–Y17	M0–M799	T0–159	C0–C79	D0–D399
	✓	✓	✓	✓	✓	-

Explanation: The LD command is used for contact a starting at the left busbar or contact a starting at a contact circuit block; its function is to save current content and save the acquired contact status in the cumulative register.

Example: Ladder diagram:

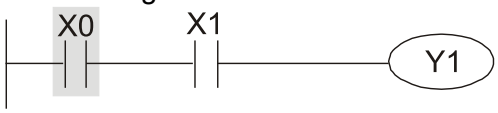

Command code:		Description:
LD	**X0**	Load Contact a of X0
AND	X1	Create series connection to contact a of X1
OUT	Y1	Drive Y1 coil

Command	Function					
LDI	Load contact b					
Operand	X0–X17	Y0–Y17	M0–M799	T0–159	C0–C79	D0–D399
	✓	✓	✓	✓	✓	-

Explanation: The LDI command is used for contact b starting at the left busbar or contact b starting at a contact circuit block; its function is to save current content and save the acquired contact status in the cumulative register.

Example: Ladder diagram:

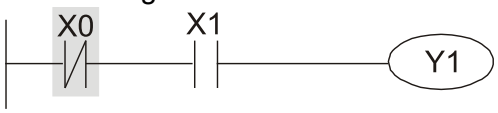

Command code:		Description:
LDI	**X0**	Load Contact b of X0
AND	X1	Create series connection to contact a of X1
OUT	Y1	Drive Y1 coil

Command	Function					
AND	Connect contact a in series					
Operand	X0–X17	Y0–Y17	M0–M799	T0–159	C0–C79	D0–D399
	✓	✓	✓	✓	✓	-

Explanation: The AND command is used to create a series connection to contact a; first reads current status of the designated series contact and logical operation results before contact in order to perform "AND" operation; saves results in cumulative register.

Example: Ladder diagram:

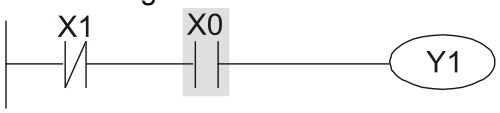

Command code:		Description:
LDI	X1	Load Contact b of X1
AND	**X0**	Create series connection to contact a of X0
OUT	Y1	Drive Y1 coil

Command	Function					
ANI	Connect contact b in series					
Operand	X0–X17	Y0–Y17	M0–M799	T0–159	C0–C79	D0–D399
	✓	✓	✓	✓	✓	-

Explanation

The ANI command is used to create a series connection to contact b; its function is to first read current status of the designated series contact and logical operation results before contact in order to perform "AND" operation; saves results in cumulative register.

Example

Ladder diagram:

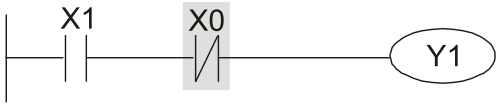

Command code:		Description:
LD	X1	Load Contact a of X1
ANI	**X0**	Create series connection to contact b of X0
OUT	Y1	Drive Y1 coil

Command	Function					
OR	Connect contact a in parallel					
Operand	X0–X17	Y0–Y17	M0–M799	T0–159	C0–C79	D0–D399
	✓	✓	✓	✓	✓	-

Explanation

The OR command is used to establish a parallel connection to contact a; its function is to first read current status of the designated series contact and logical operation results before contact in order to perform "OR" operation; saves results in cumulative register.

Example

Ladder diagram:

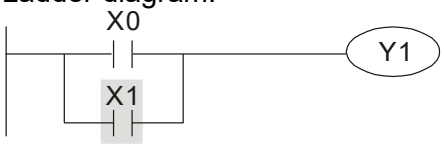

Command code:		Description:
LD	X0	Load Contact a of X0
OR	**X1**	Create series connection to contact a of X1
OUT	Y1	Drive Y1 coil

Command	Function					
ORI	Connect contact b in parallel					
Operand	X0–X17	Y0–Y17	M0–M799	T0–159	C0–C79	D0–D399
	✓	✓	✓	✓	✓	-

Explanation

The ORI command is used to establish a parallel connection to contact a; its function is to first read current status of the designated series contact and logical operation results before contact in order to perform "OR" operation; saves results in cumulative register.

Example

Ladder diagram:

Command code:		Description:
LD	X0	Load Contact a of X0
ORI	**X1**	Create series connection to contact b of X1
OUT	Y1	Drive Y1 coil

Command	Function
ANB	Series circuit block
Operand	N/A

Explanation

ANB performs an "AND" operation on the previously saved logic results and the current cumulative register content.

Example

Ladder diagram:

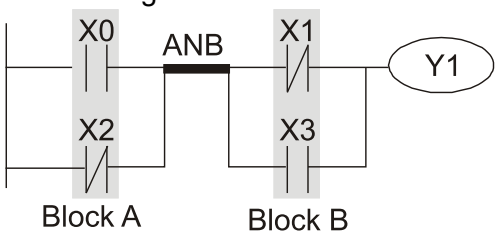

Command code:		Description:
LD	X0	Load Contact a of X0
ORI	X2	Establish parallel connection to contact b of X2
LDI	X1	Load Contact b of X1
OR	X3	Establish parallel connection to contact a of X3
ANB		Series circuit block
OUT	Y1	Drive Y1 coil

Command	Function
ORB	Parallel circuit block
Operand	N/A

Explanation

ORB performs an "OR" operation on the previously saved logic results and the current cumulative register content.

Example

Ladder diagram:

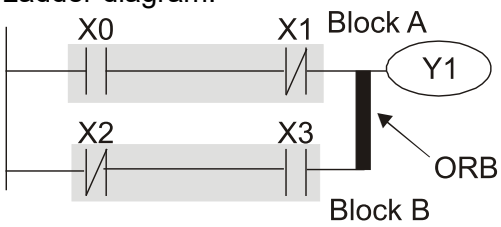

Command code:		Description:
LD	X0	Load Contact a of X0
ANI	X1	Establish parallel connection to contact b of X1
LDI	X2	Load Contact b of X2
AND	X3	Establish parallel connection to contact a of X3
ORB		Parallel circuit block
OUT	Y1	Drive Y1 coil

Command	Function
MPS	Save to stack
Operand	N/A

Explanation

Save current content of cumulative register to the stack. (Add one to stack pointer)

Command	Function
MRD	Read stack (pointer does not change)
Operand	N/A

Explanation

Reads stack content and saves to cumulative register. (Stack pointer does not change)

Command	Function
MPP	Read stack
Operand	N/A

Explanation

Retrieves result of previously-save logical operation from the stack, and saves to cumulative register. (Subtract one from stack pointer)

Example

Ladder diagram:

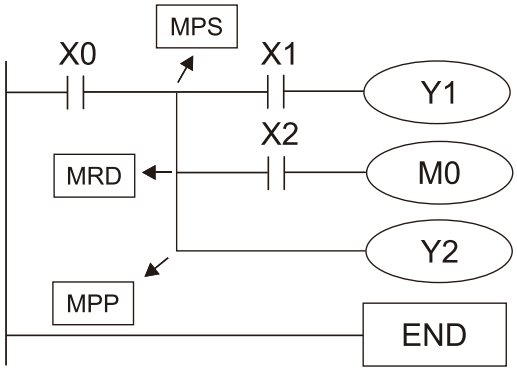

Command code:		Description:
LD	X0	Load Contact a of X0
MPS		Save to stack
AND	X1	Create series connection to contact a of X1
OUT	Y1	Drive Y1 coil
MRD		Read stack (pointer does not change)
AND	X2	Create series connection to contact a of X2
OUT	M0	Drive M0 coil
MPP		Read stack
OUT	Y2	Drive Y2 coil
END		Program conclusion

Command	Function					
OUT	Drive coil					
Operand	X0–X17	Y0–Y17	M0–M799	T0–159	C0–C79	D0–D399
	-	✓	✓	-	-	-

Explanation

Outputs result of logical operation before OUT command to the designated element.

Coil contact action:

Result:	Out command		
	Coil	Access Point:	
		Contact a (N.O.)	Contact b (N.C.)
FALSE	Off	Not conducting	Conducting
TRUE	On	Conducting	Not conducting

Example

Ladder diagram:

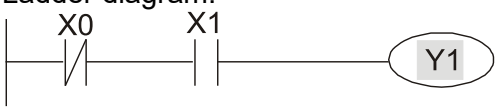

Command code:		Description:
LD	X0	Load Contact b of X0
AND	X1	Establish parallel connection to contact a of X1
OUT	**Y1**	Drive Y1 coil

Command	Function					
SET	Action continues (ON)					
Operand	X0–X17	Y0–Y17	M0–M799	T0–159	C0–C79	D0–D399
	-	✓	✓	-	-	-

Explanation

When the SET command is driven, the designated element will be set as ON, and will be maintained in an ON state, regardless of whether the SET command is still driven. The RST command can be used to set the element as OFF.

Example

Ladder diagram:

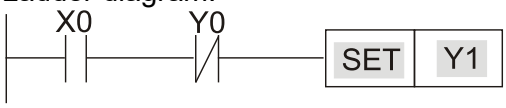

Command code:		Description:
LD	X0	Load Contact a of X0
AN	Y0	Establish parallel connection to contact b of Y0
SET	**Y1**	Action continues (ON)

Command	Function					
RST	Clear contact or register					
Operand	X0–X17	Y0–Y17	M0–M799	T0–159	C0–C79	D0–D399
	-	✓	✓	✓	✓	✓

Explanation

When the RST command is driven, the action of the designated element will be as follows:

Element	Mode
Y, M	Both coil and contact will be set as OFF.
T, C	The current timing or count value will be set as 0, and both the coil and contact will be set as OFF.
D	The content value will be set as 0.

If the RST command has not been executed, the status of the designated element will remain unchanged.

Example

Ladder diagram:

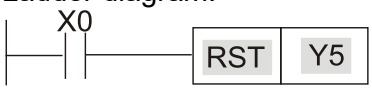

Command code:		Description:
LD	X0	Load Contact a of X0
RST	**Y5**	Clear contact or register

Command	Function	
TMR	16-bit timer	
Operand	T-K	T0–T159, K0–K32,767
	T-D	T0–T159, D0–D399

Explanation

When the TMR command is executed, the designated timer coil will be electrified, and the timer will begin timing. The contact's action will be as follows when the timing value reaches the designated set value (timing value ≥ set value):

N.O. (Normally Open) contact	Closed
N.C. (Normally Close) contact	Open

If the RST command has not been executed, the status of the designated element will remain unchanged.

Example

Ladder diagram:

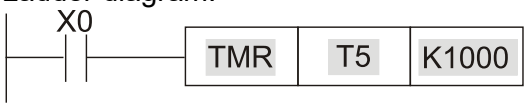

Command code:		Description:
LD	X0	Load Contact a of X0
TMR	T5 K1000	T5 timer Set value as K1000

Command	Function	
CNT	16-bit counter	
Operand	C-K	C0–C79, K0–K32,767
	C-D	C0–C79, D0–D399

Explanation

When the CNT command is executed from OFF→ON, this indicates that the designated counter coil goes from no power → electrified, and 1 will be added to the counter's count value; when the count reaches the designated value (count value = set value), the contact will have the following action:

N.O. (Normally Open) contact	Closed
N.C. (Normally Close) contact	Open

After the count value has been reached, the contact and count value will both remain unchanged even if there is continued count pulse input. Use the RST command if you wish to restart or clear the count.

Example

Ladder diagram:

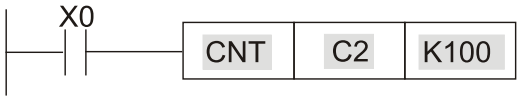

Command code: Description:

LD	X0	Load Contact a of X0
CNT	**C2 K100**	C2counter Set value as K100

Command	Function
MC/MCR	Connect/release a common series contact
Operand	N0–N7

Explanation

MC is the main control initiation command, and any commands between MC and MCR will be executed normally. When the MC command is OFF, any commands between MC and MCR will act as follows:

Determination of commands	Description
Ordinary timer	The timing value will revert to 0, the coil will lose power, and the contact will not operate
Counter	The coil will lose power, and the count value and contact will stay in their current state
Coil driven by OUT command	None receive power
Elements driven by SET, RST commands	Will remain in their current state
Applications commands	None are actuated

MCR is the main control stop command, and is placed at the end of the main control program. There may not be any contact commands before the MCR command.
The MC-MCR main control program commands support a nested program structure with a maximum only 8 levels; use in the order N0–N7, please refer to the following program:

Example

Ladder diagram:

Command code: Description:

LD	X0	Load Contact a of X0
MC	**N0**	Connection of N0 common series contact
LD	X1	Load Contact a of X1
OUT	Y0	Drive Y0 coil
:		
LD	X2	Load Contact a of X2
MC	N1	Connection of N1 common series contact
LD	X3	Load Contact a of X3

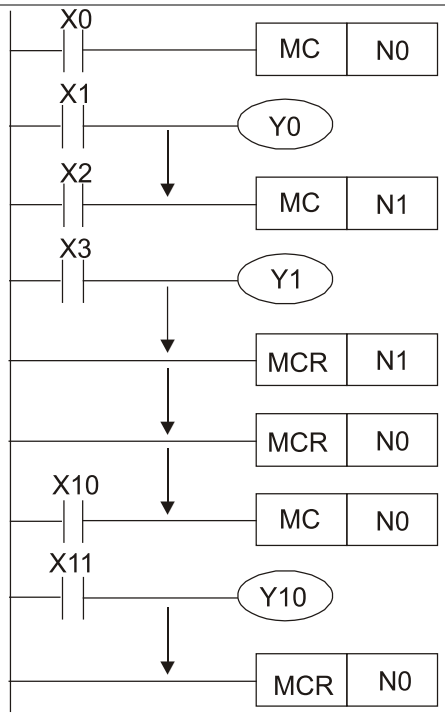

OUT	Y1	Drive Y1 coil
:		
MCR	**N1**	Release N1 common series contact
:		
MCR	**N0**	Release N0 common series contact
:		
LD	X10	Load Contact a of X10
MC	**N0**	Connection of N0 common series contact
LD	X11	Load Contact a of X11
OUT	Y10	Drive Y10 coil
:		
MCR	**N0**	Release N0 common series contact

Command	Function					
LDP	Start of forward edge detection action					
Operand	X0–X17	Y0–Y17	M0–M799	T0–159	C0–C79	D0–D399
	✓	✓	✓	✓	✓	-

Explanation

The LDP command has the same usage as LD, but its action is different; its function is to save current content, while also saving the detected state of the rising edge of the contact to the cumulative register.

Example

Ladder diagram:

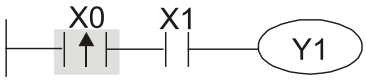

Command code:		Description:
LDP	**X0**	Start of X0 forward edge detection action
AND	X1	Create series connection to contact a of X1
OUT	Y1	Drive Y1 coil

Remark

Please refer to the function specifications table for each device in series for the scope of usage of each operand.
A rising edge contact will be TRUE after power is turned on if the rising edge contact is On before power is turned on to the PLC.

Command	Function					
LDF	Start of reverse edge detection action					
Operand	X0–X17	Y0–Y17	M0–M799	T0–159	C0–C79	D0–D399
	✓	✓	✓	✓	✓	-

Explanation

The LDF command has the same usage as LD, but its action is different; its function is to save current content while also saving the detected state of the falling edge of the contact to the cumulative register.

Example

Ladder diagram:

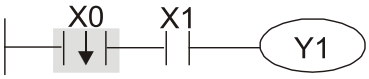

Command code:		Description:
LDF	**X0**	Start of X0 reverse edge detection action
AND	X1	Create series connection to contact a of X1
OUT	Y1	Drive Y1 coil

Command	Function					
ANDP	Forward edge detection series connection					
Operand	X0–X17	Y0–Y17	M0–M799	T0–159	C0–C79	D0–D399
	✓	✓	✓	✓	✓	-

Explanation: The ANDP command used for a contact rising edge detection series connection.

Example: Ladder diagram:

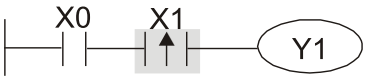

Command code:		Description:
LD	X0	Load Contact a of X0
ANDP	**X1**	X1 Forward edge detection series connection
OUT	Y1	Drive Y1 coil

Command	Function					
ANDF	Reverse edge detection series connection					
Operand	X0–X17	Y0–Y17	M0–M799	T0–159	C0–C79	D0–D399
	✓	✓	✓	✓	✓	-

Explanation: The ANDF command is used for a contact falling edge detection series connection.

Example: Ladder diagram:

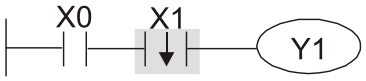

Command code:		Description:
LD	X0	Load Contact a of X0
ANDF	**X1**	X1 Reverse edge detection series connection
OUT	Y1	Drive Y1 coil

Command	Function					
ORP	Forward edge detection parallel connection					
Operand	X0–X17	Y0–Y17	M0–M799	T0–159	C0–C79	D0–D399
	✓	✓	✓	✓	✓	-

Explanation: The ORP command is used for a contact rising edge detection parallel connection.

Example: Ladder diagram:

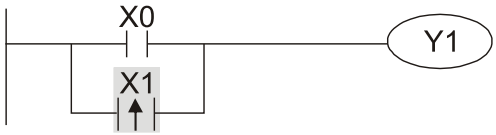

Command code:		Description:
LD	X0	Load Contact a of X0
ORP	**X1**	X1 Forward edge detection parallel connection
OUT	Y1	Drive Y1 coil

Command	Function					
ORF	Reverse edge detection parallel connection					
Operand	X0–X17	Y0–Y17	M0–M799	T0–159	C0–C79	D0–D399
	✓	✓	✓	✓	✓	-

Explanation: The ORF command is used for contact falling edge detection parallel connection.

Example: Ladder diagram:

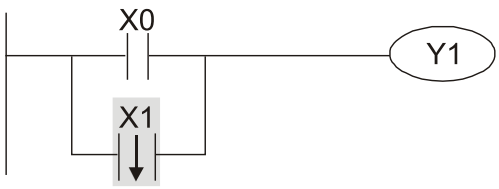

Command code:		Description:
LD	X0	Load Contact a of X0
ORF	**X1**	X1 Reverse edge detection parallel connection
OUT	Y1	Drive Y1 coil

Command	Function					
PLS	Upper differential output					
Operand	X0–X17	Y0–Y17	M0–M799	T0–159	C0–C79	D0–D399
	-	✓	✓	-	-	-

Explanation

Upper differential output commands. When X0 = OFF→ON (positive edge-triggered), the PLS command will be executed, and M0 will send one pulse, with a pulse length consisting of one scanning period.

Example

Ladder diagram:

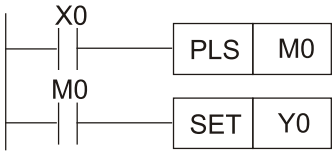

Time sequence diagram:

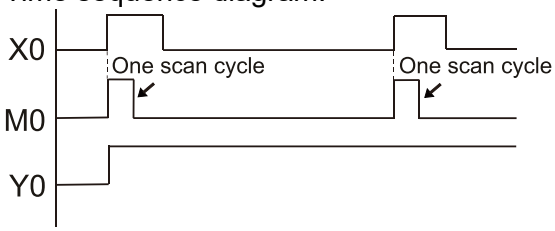

Command code:		Description:
LD	X0	Load Contact a of X0
PLS	**M0**	M0 Upper differential output
LD	M0	Load Contact a of M0
SET	Y0	Y0 Action continues (ON)

Command	Function					
PLF	Lower differential output					
Operand	X0–X17	Y0–Y17	M0–M799	T0–159	C0–C79	D0–D399
	-	✓	✓	-	-	-

Explanation

Lower differential output command. When X0 = ON→OFF (negative edge-triggered), the PLF command will be executed, and M0 will send one pulse, with pulse length consisting of one scanning period.

Example

Ladder diagram:

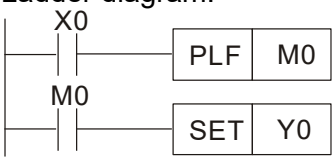

Time sequence diagram:

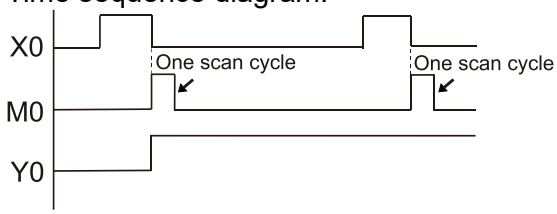

Command code:		Description:
LD	X0	Load Contact a of X0
PLF	**M0**	M0 Lower differential output
LD	M0	Load Contact a of M0
SET	Y0	Y0 Action continues (ON)

Command	Function
END	Program conclusion
Operand	N/A

Explanation

An END command must be added to the end of a ladder diagram program or command program. The PLC will scan from address 0 to the END command, and will return to address 0 and begins scanning again after execution.

Command	Function
NOP	No action
Operand	N/A

Explanation

The command NOP does not perform any operation in the program. Because execution of this command will retain the original logical operation results, it can be used in the following situation: the NOP command can be used instead of a command that is deleted without changing the program length.

Example

Ladder diagram:

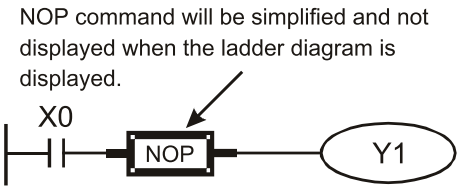

Command code:		Description:
LD	X0	Load Contact b of X0
NOP		No action
OUT	Y1	Drive Y1 coil

Command	Function
INV	Inverse of operation results
Operand	N/A

Explanation

Saves the result of the logic inversion operation prior to the INV command in the cumulative register.

Example

Ladder diagram:

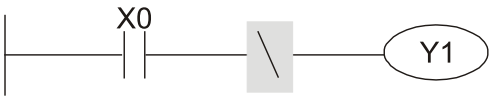

Command code:		Description:
LD	X0	Load Contact a of X0
INV		Inverse of operation results
OUT	Y1	Drive Y1 coil

Command	Function
P	Index
Operand	P0–P255

Explanation

Pointer P is used to subprogram call command API 01 CALL. User does not require starting from zero, but the number cannot be used repeatedly, otherwise an unpredictable error will occur.

Example

Ladder diagram:

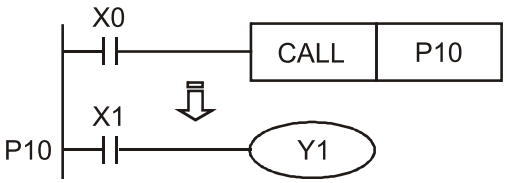

Command code:		Description:
LD	X0	Load Contact a of X0
CALL	P10	Call command CALL to P10
:		
P10		Pointer P10
LD	X1	Load Contact a of X1
OUT	Y1	Drive Y1 coil

16-6-3 Overview of application commands

Classification	API	Command code		P command	Function	STEPS	
		16 bit	32 bit			16 bit	32 bit
Circuit Control	01	CALL	-	✓	Call subprogram	3	-
	2	SRET	-	-	Conclusion of subprogram	1	-
	06	FEND	-	-	Conclusion a main program	1	-
Send Comparison	10	CMP	DCMP	✓	Compares set output	7	13
	11	ZCP	DZCP	✓	Range comparison	9	17
	12	MOV	DMOV	✓	Data movement	5	9
	13	SMOV	DSMOV	✓	Nibble movement	11	21
	15	BMOV	–	✓	Send all	7	–
Four Logical Operations	18	BCD	DBCD	✓	BIN to BCD transformation	5	9
	19	BIN	DBIN	✓	BCD to BIN transformation	5	9
	20	ADD	DADD	✓	BIN addition	7	13
	21	SUB	DSUB	✓	BIN subtraction	7	13
	22	MUL	DMUL	✓	BIN multiplication	7	13
	23	DIV	DDIV	✓	BIN division	7	13
	24	INC	DINC	✓	BIN add one	3	5
	25	DEC	DDEC	✓	BIN subtract one	3	5
Rotational Displacement	30	ROR	DROR	✓	Right rotation	5	–
	31	ROL	DROL	✓	Left rotation	5	–
Data Process	40	ZRST	–	✓	Clear range	5	-
	41	DECO	DDECO	✓	Decoder	7	13
	42	ENCO	DENCO	✓	Encoder	7	13
	43	SUM	DSUM	✓	ON bit number	5	9
	44	BON	DBON	✓	ON bit judgement	7	13
	49	FLT	DFLT	✓	BIN whole number → binary floating point number transformation	5	9
Floating Point Operation	110	–	DECMP	✓	Comparison of binary floating point numbers	–	13
	111	–	DEZCP	✓	Comparison of binary floating point number range	–	17
	116	–	DRAD	✓	Angle → Diameter	–	9
	117	–	DDEG	✓	Diameter → angle	–	9
	120	–	DEADD	✓	Binary floating point number addition	–	13
	121	–	DESUB	✓	Binary floating point number subtraction	–	13
	122	–	DEMUL	✓	Binary floating point number multiplication	–	13
	123	–	DEDIV	✓	Binary floating point number division	–	13
	124	–	DEXP	✓	Binary floating point number obtain exponent	–	9
	125	–	DLN	✓	Binary floating point number obtain logarithm	–	9
	127	–	DESQR	✓	Binary floating point number find square root	–	9
	129	INT	DINT	✓	Binary floating point number → BIN whole number transformation	5	9
	130	–	DSIN	✓	Binary floating point number SIN operation	–	9
	131	–	DCOS	✓	Binary floating point number COS operation	–	9
	132	–	DTAN	✓	Binary floating point number TAN operation	–	9
	133	–	DASIN	✓	Binary floating point number ASIN operation	–	9

Classification	API	Command code		P command	Function	STEPS	
		16 bit	32 bit			16 bit	32 bit
	134	–	DACOS	✓	Binary floating point number ACOS operation	–	9
	135	–	DATAN	✓	Binary floating point number ATAN operation	–	9
	136	–	DSINH	✓	Binary floating point number SINH operation	–	9
	137	–	DCOSH	✓	Binary floating point number COSH operation	–	9
	138	–	DTANH	✓	Binary floating point number TANH operation	–	9
Other	147	SWAP	DSWAP	✓	Exchange the up/down 8 bits	3	5
Communication	150	MODRW	–	✓	MODBUS read/write	7	–
Calendar	160	TCMP	–	✓	Compare calendar data	11	–
	161	TZCP	–	✓	Compare calendar data range	9	–
	162	TADD	–	✓	Calendar data addition	7	–
	163	TSUB	–	✓	Calendar data subtraction	7	–
	166	TRD	–	✓	Calendar data read	3	–
GRAY Code	170	GRY	DGRY	✓	BIN→GRY code transformation	5	9
	171	GBIN	DGBIN	✓	GRY code →BIN transformation	5	9
Contact form Logical Operation	215	LD&	DLD&	-	Contact form logical operation LD#	5	9
	216	LD|	DLD|	-	Contact form logical operation LD#	5	9
	217	LD^	DLD^	-	Contact form logical operation LD#	5	9
	218	AND&	DAND&	-	Contact form logical operation AND#	5	9
	219	AND|	DAND|	-	Contact form logical operation AND#	5	9
	220	AND^	DAND^	-	Contact form logical operation AND#	5	9
	221	OR&	DOR&	-	Contact form logical operation OR#	5	9
	222	OR|	DOR|	-	Contact form logical operation OR#	5	9
	223	OR^	DOR^	-	Contact form logical operation OR#	5	9
Contact form Compare Command	224	LD =	DLD =	-	Contact form compare LD*	5	9
	225	LD >	DLD >	-	Contact form compare LD*	5	9
	226	LD <	DLD <	-	Contact form compare LD*	5	9
	228	LD < >	DLD < >	-	Contact form compare LD*	5	9
	229	LD < =	DLD < =	-	Contact form compare LD*	5	9
	230	LD > =	DLD > =	-	Contact form compare LD*	5	9
	232	AND =	DAND =	-	Contact form compare AND*	5	9
	233	AND >	DAND >	-	Contact form compare AND*	5	9
	234	AND <	DAND <	-	Contact form compare AND*	5	9
	236	AND < >	DAND < >	-	Contact form compare AND*	5	9
	237	AND < =	DAND < =	-	Contact form compare AND*	5	9
	238	AND > =	DAND > =	-	Contact form compare AND*	5	9
	240	OR =	DOR =	-	Contact form compare OR*	5	9
	241	OR >	DOR >	-	Contact form compare OR*	5	9
	242	OR <	DOR <	-	Contact form compare OR*	5	9

Classification	API	Command code		P command	Function	STEPS	
		16 bit	32 bit			16 bit	32 bit
	244	OR < >	DOR < >	-	Contact form compare OR*	5	9
	245	OR < =	DOR < =	-	Contact form compare OR*	5	9
	246	OR > =	DOR > =	-	Contact form compare OR*	5	9
Floating Point Contact Form	275	-	FLD =	-	Floating point number contact form compare LD*	-	9
	276	-	FLD >	-	Floating point number contact form compare LD*	-	9
	277	-	FLD <	-	Floating point number contact form compare LD*	-	9
Compare Command	278	-	FLD < >	-	Floating point number contact form compare LD*	-	9
	279	-	FLD < =	-	Floating point number contact form compare LD*	-	9
	280	-	FLD > =	-	Floating point number contact form compare LD*	-	9
	281	-	FAND =	-	Floating point number contact form compare AND*	-	9
	282	-	FAND >	-	Floating point number contact form compare AND*	-	9
	283	-	FAND <	-	Floating point number contact form compare AND*	-	9
	284	-	FAND < >	-	Floating point number contact form compare AND*	-	9
	285	-	FAND < =	-	Floating point number contact form compare AND*	-	9
	286	-	FAND > =	-	Floating point number contact form compare AND*	-	9
	287	-	FOR =	-	Floating point number contact form compare OR*	-	9
	288	-	FOR >	-	Floating point number contact form compare OR*	-	9
	289	-	FOR <	-	Floating point number contact form compare OR*	-	9
	290	-	FOR < >	-	Floating point number contact form compare OR*	-	9
	291	-	FOR < =	-	Floating point number contact form compare OR*	-	9
	292	-	FOR > =	-	Floating point number contact form compare OR*	-	9
Drive Special Command	139	RPR	–	✓	Read servo parameter	5	–
	140	WPR	–	✓	Write servo parameter	5	–
	141	FPID	–	✓	Drive PID control mode	9	–
	142	FREQ	–	✓	Drive torque control mode	7	–
	262	–	DPOS	✓	Set target	-	5
	263	TORQ	–	✓	Set target torque	5	-
	261	CANRX	–	✓	Read CANopen slave station data	9	-
	264	CANTX	–	✓	Write CANopen slave station data	9	-
	265	CANFLS	–	✓	Refresh special D corresponding to CANopen	3	-
	320	ICOMR	DICOMR	✓	Internal communications read	9	17
	321	ICOMW	DICOMW	✓	Internal communications write	9	17
	323	WPRA	–	-	RAM write in drive parameters	5	-

16-6-4 Detailed explanation of applications commands

API 01	CALL P	S	Call subprogram

	Bit device			Word device							
	X	Y	M	K	H	KnX	KnY	KnM	T	C	D

Notes on operand usage:
The S operand can designate P
CH2000 series device: The S operand can designate P0-P63

16-bit command (3 STEP)			
CALL	Continuous execution type	CALLP	Pulse execution type

32-bit command			
-	-	-	-

Flag signal: none

Explanation

- **S**: Call subprogram pointer.
- Write the subprogram after the FEND command.
- The subprogram must end after the SRET command.
- Refer to the FEND command explanation and sample content for detailed command functions.

API 02	SRET P	–	Conclusion of subprogram

	Bit device			Word device							
	X	Y	M	K	H	KnX	KnY	KnM	T	C	D

Notes on operand usage:
No operand
A contact-driven command is not needed

16-bit command (1 STEP)			
FEND	Continuous execution type	-	-

32-bit command			
-	-	-	-

Flag signal: none

Explanation

- A contact-driven command is not needed. Automatically returns next command after CALL command
- Indicates end of subprogram. After end of subprogram, SRET returns to main program, and executes next command after the original call subprogram CALL command.
- Refer to the FEND command explanation and sample content for detailed command functions.

API 06	FEND	–	Conclusion a main program

	Bit device			Word device							
	X	Y	M	K	H	KnX	KnY	KnM	T	C	D

Notes on operand usage:
No operand
A contact-driven command is not needed

16-bit command (1 STEP)			
FEND	Continuous execution type	-	-

32-bit command			
-	-	-	-

Flag signal: none

Explanation

- This command indicates the end of the main program. It is the same as the END command when the PLC executes this command.
- The CALL command program must be written after the FEND command, and the SRET command added to the end of the subprogram.
- When using the FEND command, an END command is also needed. However, the END command must be placed at the end, after the main program and subprogram.

CALL command process

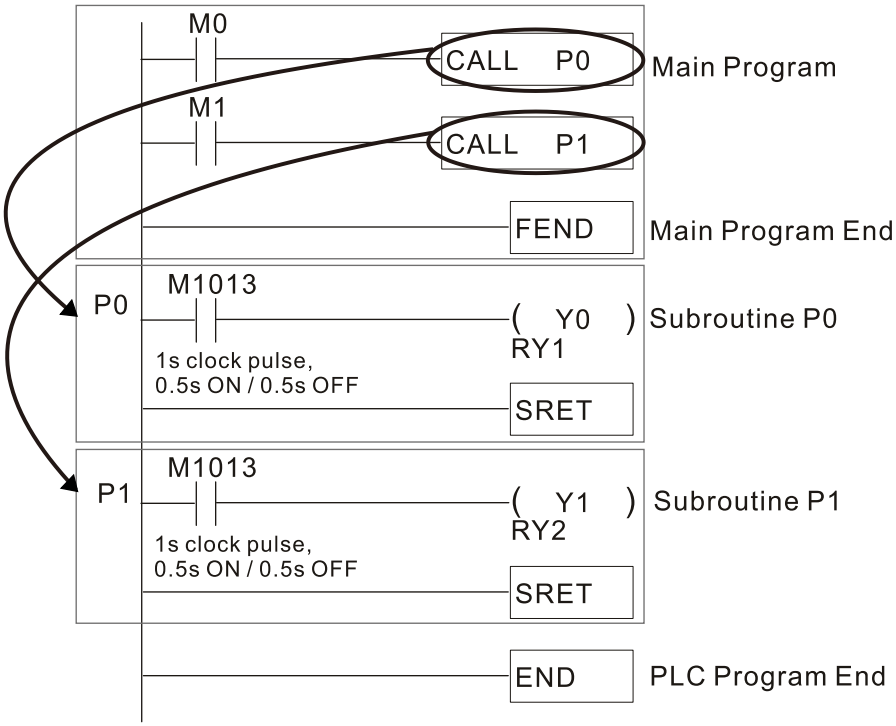

API 10	D	CMP	P	S1 S2 D	Compares set output

	Bit device			Word device							
	X	Y	M	K	H	KnX	KnY	KnM	T	C	D
S1				*	*	*	*	*	*	*	*
S2				*	*	*	*	*	*	*	*
D		*	*								

Notes on operand usage:
The operand D occupies three consecutive points

16-bit command (7 STEP)

CMP	Continuous execution type	CMPP	Pulse execution type

32-bit command (13 STEP)

DCMP	Continuous execution type	DCMPP	Pulse execution type

Flag signal: none

Explanation

- **S1**: Compare value 1. **S2**: Compare value 2. **D**: Results of comparison.
- Compares the size of the content of operand **S1** and **S2**; the results of comparison are expressed in **D**.
- Size comparison is performed algebraically. All data is compared in the form of numerical binary values. Because this is a 16-bit command, when b15 is 1, this indicates a negative number.

Example

- When the designated device is Y0, it automatically occupies Y0, Y1 and Y2.
- When X10 = ON, the CMP command executes, and Y0, Y1 or Y2 will be ON. When X10 = OFF, the CMP command will not execute, and the state of Y0, Y1 and Y2 will remain in the state prior to X10 = OFF.
- If ≥, ≤, or ≠ results are needed, they can be obtained via series/parallel connections of Y0–Y2.

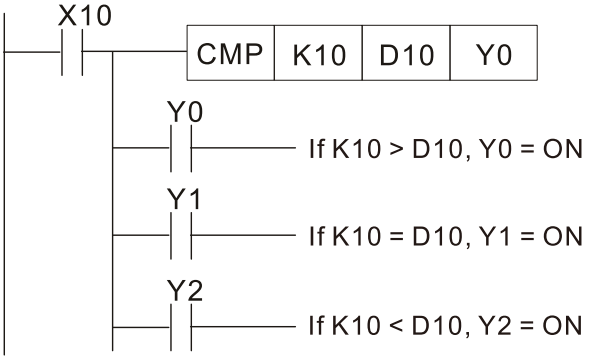

- To clear results of comparison, use the RST or ZRST command.

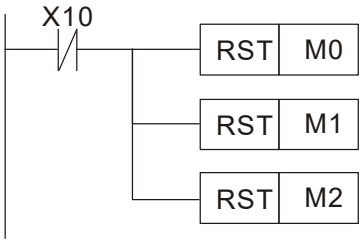

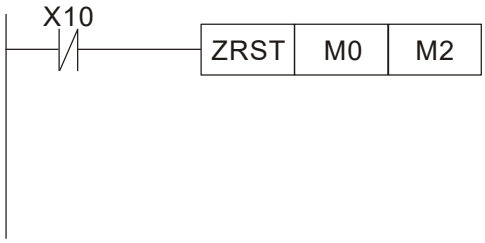

API 11	D	ZCP	P	S1 S2 S D	Range comparison

	Bit device			Word device							
	X	Y	M	K	H	KnX	KnY	KnM	T	C	D
S1				*	*	*	*	*	*	*	*
S2				*	*	*	*	*	*	*	*
S				*	*	*	*	*	*	*	*
D		*	*								

Notes on operand usage:
The content value of operand S1 is less than the content value of S2 operand
The operand D occupies three consecutive points

16-bit command (9 STEP)

ZCP	Continuous execution type	ZCPP	Pulse execution type

32-bit command (17 STEP)

DZCP	Continuous execution type	DZCPP	Pulse execution type

Flag signal: none

Explanation

- **S1**: Lower limit of range comparison. **S2**: Upper limit of range comparison. **S**: Comparative value. **D**: Results of comparison.
- When the comparative value **S** is compared with the lower limit **S1** and upper limit **S2**, the results of comparison are expressed in **D**.
- When lower limit **S1** > upper limit **S2**, the command will use the lower limit **S1** to perform comparison with the upper and lower limit.
- Size comparison is performed algebraically. All data is compared in the form of numerical binary values. Because this is a 16-bit command, when b15 is 1, this indicates a negative number.

Example

- When the designated device is M0, it automatically occupies M0, M1 and M2.
- When X0 = ON, the ZCP command executes, and M0, M1 or M2 will be ON. When X0 = OFF, the ZCP command will not execute, and the state of M0, M1 or M2 will remain in the state prior to X0 = OFF.
- If ≥, ≤, or ≠ results are needed, they can be obtained via series/parallel connections of M0–M2.

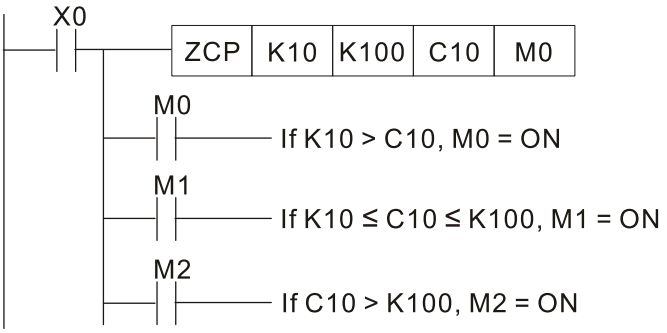

- To clear results of comparison, use the RST or ZRST command.

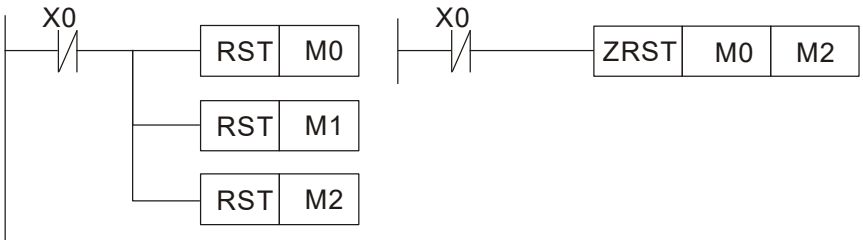

API 12	D	MOV	P	S D	Data movement

	Bit device			Word device							
	X	Y	M	K	H	KnX	KnY	KnM	T	C	D
S				*	*	*	*	*	*	*	*
D							*	*	*	*	*

Notes on operand usage: none

16-bit command (5 STEP)			
MOV	Continuous execution type	MOVP	Pulse execution type

32-bit command (9 STEP)			
DMOV	Continuous execution type	DMOVP	Pulse execution type

Flag signal:

Explanation

- **S**: Data source. **D**: Destination of data movement.
- When this command is executed, the content of **S** will be directly moved to **D**. When the command is not executed, the content of **D** will not change.

Example

- When X0 = OFF, the content of D10 will not change; if X0 = ON, the value K10 will be sent to data register D10.
- When X1 = OFF, the content of D10 will not change; if X1 = ON, the current value of T0 will be sent to data register D10.

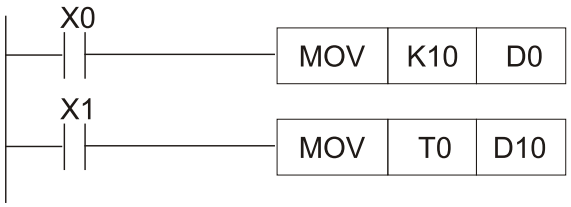

API 13	D	SMOV	P	S m1 m2 D n	Nibble movement

	Bit device			Word device							
	X	Y	M	K	H	KnX	KnY	KnM	T	C	D
S				*	*	*	*	*	*	*	*
D							*	*	*	*	*

Notes on operand usage: none

16-bit command (11 STEP)

MOV	Continuous execution type	SMOVP	Pulse execution type

32-bit command (21 STEP)

DSMOV	Continuous execution type	DSMOV P	Pulse execution type

Flag signal: M1168

Explanation

- **S**: Data source. **m1**: The data source transfers starting bit number.
  m2: The data source transfers individual bit number. **D**: Transfer destination.
  n: Transferring starting bit number of the destination.
- BCD mode (M1168 = OFF):
  SMOV enables and operates BCD under this mode, the operation is similar to the way SMOV operates decimal numbers. The command copies specific bit number of arithmetic element **S** (S is a 4-figure decimal number), and sends the bit number to arithmetic element **D** (D is also a 4-figure decimal number). The current data on the target register will be covered.
- $\mathbf{m_1}$ range: 1–4
- $\mathbf{m_2}$ range: 1–$\mathbf{m_1}$ ($\mathbf{m_2}$ cannot be larger than m_1)
- **n** range: $\mathbf{m_2}$–4 (n cannot be smaller than m_2)

Example 1

- When M1168 = OFF (BCD mode), X0 is ON, the instruction transfers two digits of the decimal number starting from the fourth digit of the decimal number (the digit in the thousands place of the decimal number) in D10 to the two digits of the decimal number starting from the third digit of the decimal number (the digit in the hundreds place of the decimal number) in D20. After the instruction is executed, the digits in the thousands place of the decimal number (10^3) and the ones place of the decimal number (10^0) in D20 are unchanged.

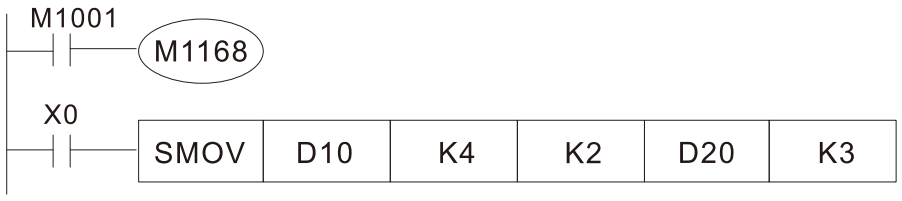

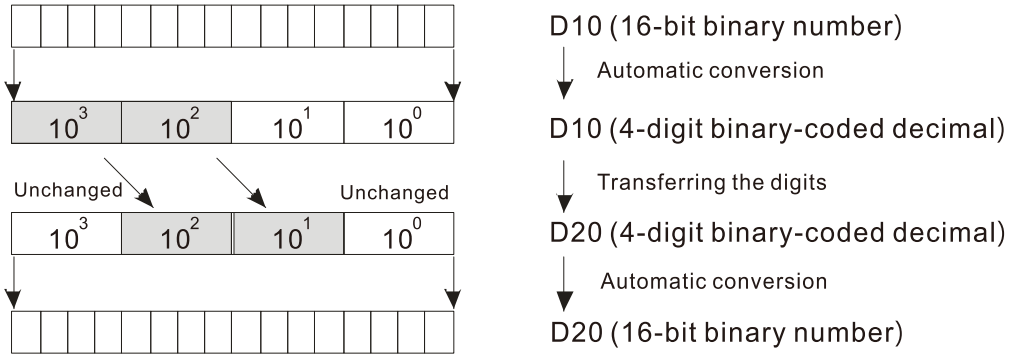

Example 2

- When M1168 is ON (BIN mode), and the SMOV command is executed, D10 and D20 do not change in BCD mode, but send 4 digits as a unit in BIN mode.

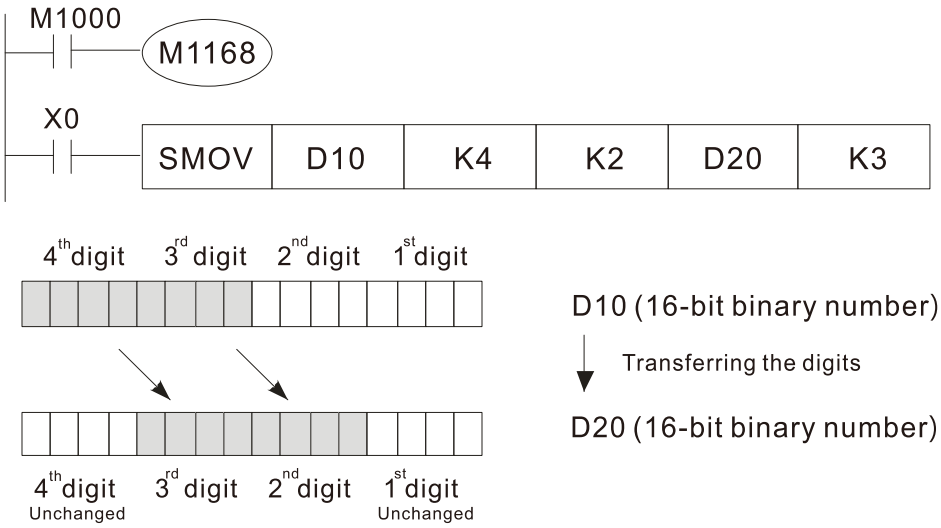

API 15	BMOV P	S D n	Send all

	Bit device			Word device							
	X	Y	M	K	H	KnX	KnY	KnM	T	C	D
S						*	*	*	*	*	*
D							*	*	*	*	*
n				*	*				*	*	

Notes on operand usage:
n operand scope n = 1 to 512

16-bit command (7 STEP)			
BMOV	Continuous execution type	BMOVP	Pulse execution type
32-bit command			
-	-	-	-

Flag signal: none

Explanation

- **S**: Initiate source device. **D**: Initiate destination device. **n**: Send block length.
- The content of n registers starting from the initial number of the device designated by **S** will be sent to the n registers starting from the initial number of the device designated by **n**; if the number of points referred to by n exceeds the range used by that device, only points within the valid range will be sent.

Example 1

- When X10 = ON, the content of registers D0–D3 will be sent to the four registers D20 to D23.

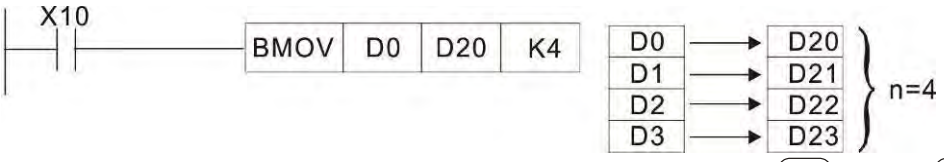

Example 2

- If the designated bit devices KnX, KnY, and KnM are sent, S and D must have the same number of nibbles, which implies that n must be identical.

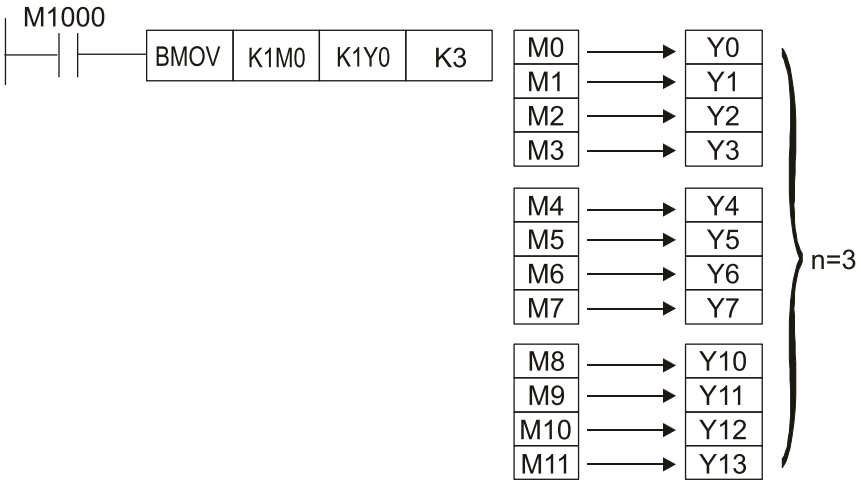

Example 3

- In order to prevent overlap between the transmission addresses of two operands, which would cause confusion, make sure that the addresses designated by the two operands have different sizes, as shown below:

When **S** > **D**, send in the order ①→② →③.

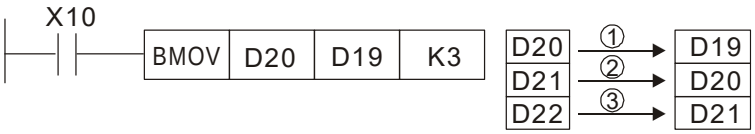

When **S** < **D**, send in the order ③→② →①.

API 18	D	BCD	P	S D	BIN to BCD transformation

	Bit device			Word device							
	X	Y	M	K	H	KnX	KnY	KnM	T	C	D
S						*	*	*	*	*	*
D							*	*	*	*	*

Notes on operand usage: none

16-bit command (5 STEP)

BCD	Continuous execution type	BCDP	Pulse execution type

32-bit command (9 STEP)

DBCD	Continuous execution type	DBCDP	Pulse execution type

Flag signal: none

Explanation

- **S**: Data source. **D**: Destination of data movement.
- The content of data source **S** (BIN value, 0–9999) executes BCD transformation and saves in **D**.
- Arithmetic elements S and D use the F device, it can only use 16-bit command.

Example

- When X0 is ON, and the BIN value of D10 is transformed to BCD value, the digit is saved in 4-bit element of K1Y0 (Y0–Y3).

- If D10 = 001E (Hex) = 0030 (Decimal), the executed result will be Y0–Y3=0000 (BIN).

API 19	D	BIN	P	S D	BCD to BIN transformation

	Bit device			Word device							
	X	Y	M	K	H	KnX	KnY	KnM	T	C	D
S						*	*	*	*	*	*
D							*	*	*	*	*

Notes on operand usage: none

16-bit command (5 STEP)

BIN	Continuous execution type	BINP	Pulse execution type

32-bit command (9 STEP)

DBIN	Continuous execution type	DBINP	Pulse execution type

Flag signal: none

Explanation

- **S**: Data source. **D**: Transformation result.
- The content of data source **S** (BCD: 0–9,999) executes BIN transformation and saves in **D**.
- Valid number range of the data source S: BCD (0–9,999), DBCD (0–99,999,999).

Example

- When X0 is ON, and the BCD value of K1X20 is transformed to BIN value, the result saves in D10.

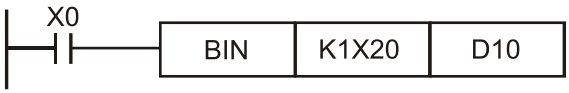

Remark

- When PLC reads a BCD type switch-off from the outside, it has to use the BIN command to transform the read data to BIN value, then saves the value into PLC.

API 20	D	ADD	P	S1 S2 D	BIN addition

	Bit device			Word device							
	X	Y	M	K	H	KnX	KnY	KnM	T	C	D
S1				*	*	*	*	*	*	*	*
S2				*	*	*	*	*	*	*	*
D							*	*	*	*	*

Notes on operand usage: none

16-bit command (7 STEP)

ADD	Continuous execution type	ADDP	Pulse execution type

32-bit command (13 STEP)

DADD	Continuous execution type	DADDP	Pulse execution type

Flag signal: M1020 Zero flag
M1021 Borrow flag
M1022 Carry flag
Please refer to the following supplementary explanation

Explanation

- **S1**: Augend. **S2**: Addend. **D**: Sum.
- Using two data sources: The result of adding **S1** and **S2** using the BIN method will be stored in **D**.
- The highest bit of any data is symbolized as bit 0 indicating (positive) 1 indicating (negative), enabling the use of algebraic addition operations. (for instance: 3+(-9) = -6)
- Flag changes connected with the addition.
  1. When calculation results are 0, the zero flag M1020 will be ON.
  2. When calculation results are less than –32,768, the borrow flag M1021 will be ON.
  3. When calculation results are greater than 32,767, the carry flag M1022 will be ON.

Example

- 16-bit BIN addition: When X0 = ON, the result of the content of addend D0 plus the content of augend D10 will exist in the content of D20.

Remark

- Relationship between flag actions and negative/positive numbers:

16-bit:

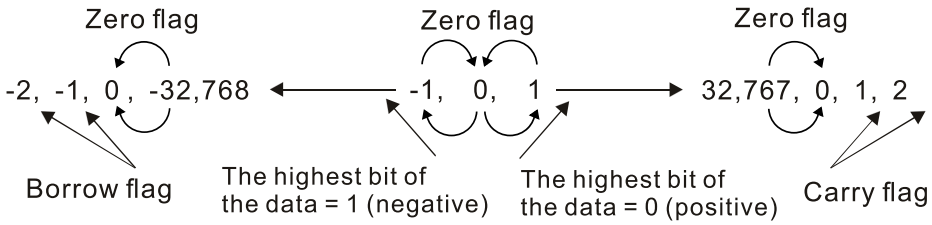

32-bit:

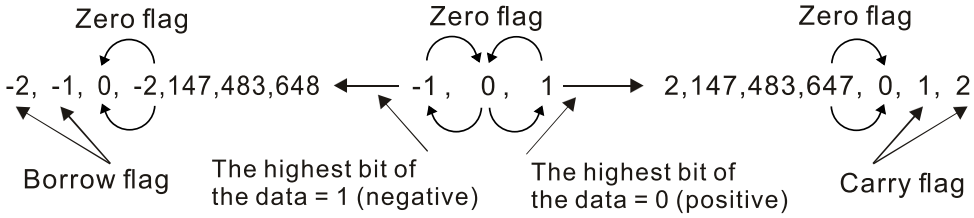

API 21	D	SUB	P	S1 S2 D	BIN subtraction

	Bit device			Word device							
	X	Y	M	K	H	KnX	KnY	KnM	T	C	D
S1				*	*	*	*	*	*	*	*
S2				*	*	*	*	*	*	*	*
D							*	*	*	*	*

Notes on operand usage: none

16-bit command (7 STEP)

SUB	Continuous execution type	SUBP	Pulse execution type

32-bit command (13 STEP)

DSUB	Continuous execution type	DSUBP	Pulse execution type

Flag signal: M1020 Zero flag
M1021 Borrow flag
M1022 Carry flag
Please refer to the following supplementary explanation

Explanation

- **S1**: Minuend. **S2**: Subtrahend. **D**: Difference.
- Using two data sources: The result of subtraction of **S1** and **S2** using the BIN method is stored in **D**.
- The highest bit of any data is symbolized as bit 0 indicating (positive) 1 indicating (negative), enabling the use of algebraic subtraction operations.
- Flag changes connected with subtraction.
  1. When calculation results are 0, the zero flag M1020 will be ON.
  2. When calculation results are less than –32,768, the borrow flag M1021 will be ON.
  3. When calculation results are greater than 32,767, the carry flag M1022 will be ON.

Example

- 16-bit BIN subtraction: When X0 = ON, the content of D10 is subtracted from the content of D0, and the difference is stored in D20.

API 22	D	MUL	P	S1 S2 D	BIN multiplication

	Bit device			Word device							
	X	Y	M	K	H	KnX	KnY	KnM	T	C	D
S1				*	*	*	*	*	*	*	*
S2				*	*	*	*	*	*	*	*
D							*	*	*	*	*

Notes on operand usage:
The 16-bit command operand D will occupy 2 consecutive points

16-bit command (7 STEP)

MUL	Continuous execution type	MULP	Pulse execution type

32-bit command (13 STEP)

DMUL	Continuous execution type	DMULP	Pulse execution type

Flag signal: none

Explanation

- **S1**: Multiplicand. **S2**: Multiplier. **D**: Product.
- Using two data sources: When **S1** and **S2** are multiplied using the BIN method, the product is stored in **D**.

16-bit BIN multiplication operation:

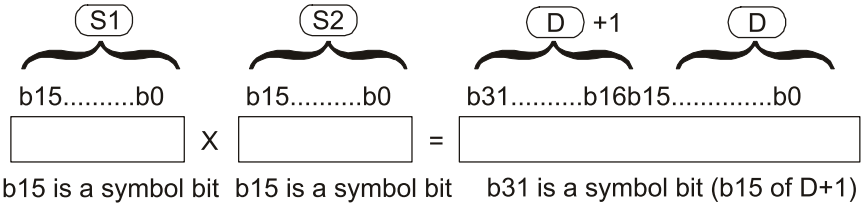

Symbol bit = 0 refers to a positive value
Symbol bit = 1 refers to a negative vlalue

When **D** is a bit device, K1–K4 can be designated as a hexadecimal number, which will occupy 2 consecutive units.

Example

- When 16-bit DO is multiplied by 16-bit D10, the result will be a 32-bit product; the upper 16 bits will be stored in D21, and the lower 16 bits will be stored in D20. Whether the bit at the farthest left is OFF or ON will indicate the sign of the result.

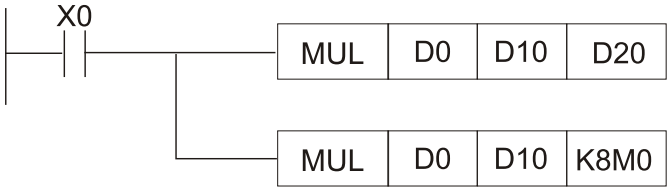

API 23	D	DIV	P	S1 S2 D	BIN division

	Bit device			Word device							
	X	Y	M	K	H	KnX	KnY	KnM	T	C	D
S1				*	*	*	*	*	*	*	*
S2				*	*	*	*	*	*	*	*
D							*	*	*	*	*

Notes on operand usage:
The 16-bit command operand D will occupy 2 consecutive points

16-bit command (7 STEP)

DIV	Continuous execution type	DIVP	Pulse execution type

32-bit command (13 STEP)

DDIV	Continuous execution type	DDIVP	Pulse execution type

Flag signal: none

Explanation

- **S1**: Dividend. **S2**: Divisor. **D**: Quotient and remainder.
- Using two data sources: The quotient and remainder will be stored in **D** when **S1** and **S2** are subjected to division using the BIN method. The sign bit for **S1**, **S2** and **D** must be kept in mind when performing a 16-bit operation.

16-bit BIN division:

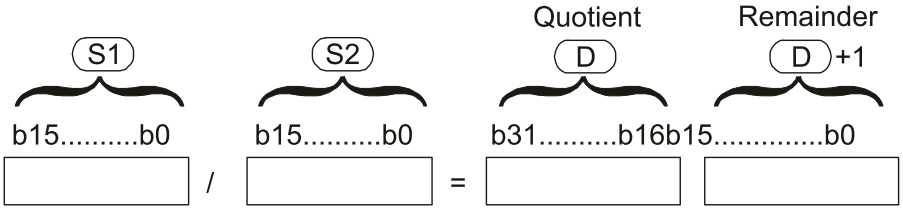

If **D** is a bit device, K1–K4 can be designated 16 bits, which will occupy 2 consecutive units and yield the quotient and remainder.

Example

- When X0 = ON, the quotient resulting from division of dividend D0 by divisor D10 will be placed in D20, and the remainder will be placed in D21. Whether the highest bit is OFF or ON will indicate the sign of the result.

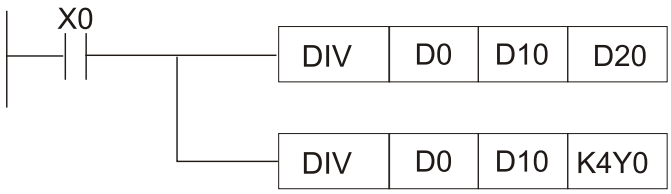

API 24	D	INC	P	D	BIN add one

	Bit device			Word device							
	X	Y	M	K	H	KnX	KnY	KnM	T	C	D
D							*	*	*	*	*

Notes on operand usage: none

16-bit command (3 STEP)

INC	Continuous execution type	INCP	Pulse execution type

32-bit command (5 STEP)

DINC	Continuous execution type	DINCP	Pulse execution type

Flag signal: none

Explanation

- **D**: Destination device.
- If a command is not the pulse execution type, when the command is executed, the program will add 1 to the content of device **D** for each scanning cycle.
- This command is ordinarily used as a pulse execution type command (INCP).
- During 16-bit operation, 32,767 +1 will change the value to -32,768. During 32 bit operation, 2,147,483,647 +1 will change the value to -2,147,483,648.

Example

- When X0 = OFF→ON, 1 is automatically added to the content of D0.

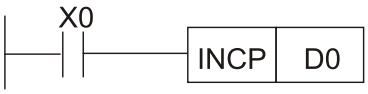

API 25	D	DEC	P	D	BIN subtract one

	Bit device			Word device							
	X	Y	M	K	H	KnX	KnY	KnM	T	C	D
D				*	*	*	*	*			

Notes on operand usage: none

16-bit command (3 STEP)

DEC	Continuous execution type	DECP	Pulse execution type

32-bit command (5 STEP)

DDEC	Continuous execution type	DDECP	Pulse execution type

Flag signal: none

Explanation

- **D**: Destination device.
- If a command is not the pulse execution type, when the command is executed, the program will add 1 to the content of device **D** for each scanning cycle.
- This command is ordinarily used as a pulse execution type command (DECP).
- During 16-bit operation, -32,768 minus 1 will change the value to 32,767. During 32 bit operation, -2,147,483,648 minus 1 will change the value to -2,147,483,647.

Example

- When X0 = OFF→ON, 1 is automatically subtracted from the content of D0.

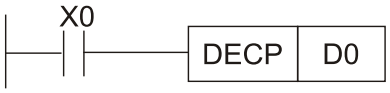

API 30	D	ROR	P	D n	Right rotation

	Bit device			Word device							
	X	Y	M	K	H	KnX	KnY	KnM	T	C	D
D							*	*	*	*	*
n				*	*						

Notes on operand usage:
Only K4 (16-bit) will be valid if the operand D is designated as KnY or KnM.
n operand n=K1-K16 (16-bit)

16-bit command (5 STEP)

ROR	Continuous execution type	RORP	Pulse execution type

32-bit command (9 STEP)

DROR	Continuous execution type	DRORP	Pulse execution type

Flag signal: M1022 Carry flag

Explanation

- **D**: Device to be rotated. **n**: Number of bits for one rotation.
- Rotates the device designated by **D** to the right **n** bits.
- This command is ordinarily used as a pulse execution type command (RORP).

Example

- When X0 = OFF→ON, 4 of the 16 bits in D10 specify a right rotation; the content of the bit indicated with * (see figure below) will be sent to the carry flag signal M1022.

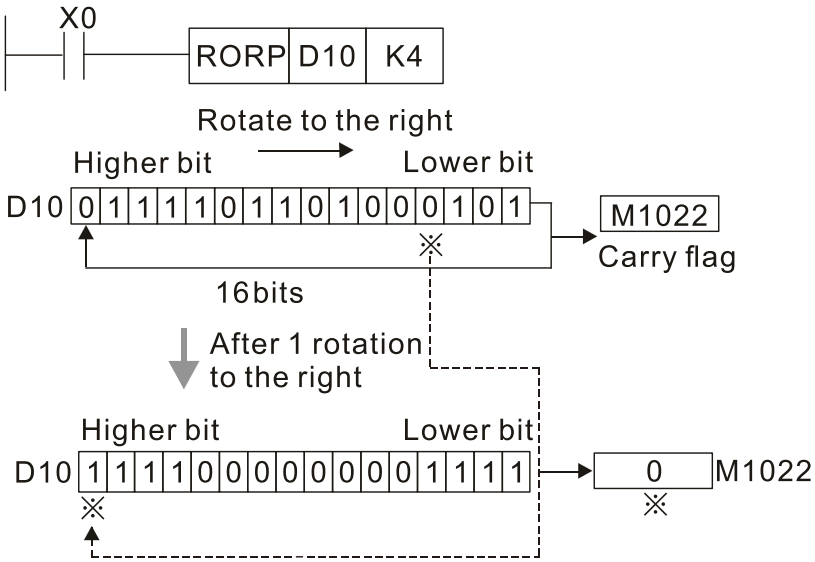

API 31	D	ROL	P	D n	Left rotation

	Bit device			Word device							
	X	Y	M	K	H	KnX	KnY	KnM	T	C	D
D							*	*	*	*	*
n				*	*						

Notes on operand usage:
Only K4 (16-bit) will be valid if the operand D is designated as KnY or KnM.
n operand n=1 to 16 (16-bit)

16-bit command (5 STEP)

ROL	Continuous execution type	ROLP	Pulse execution type

32-bit command (9 STEP)

DROL	Continuous execution type	DROLP	Pulse execution type

Flag signal: M1022 Carry flag

Explanation

- **D**: Device to be rotated. **n**: Number of bits for one rotation.
- Rotates the device designated by **D** to the left **n** bits.
- This command is ordinarily used as a pulse execution type command (ROLP).

Example

- When X0 = OFF→ON, 4 of the 16 bits in D10 specify a left rotation; the content of the bit indicated with * (see figure below) will be sent to the carry flag signal M1022.

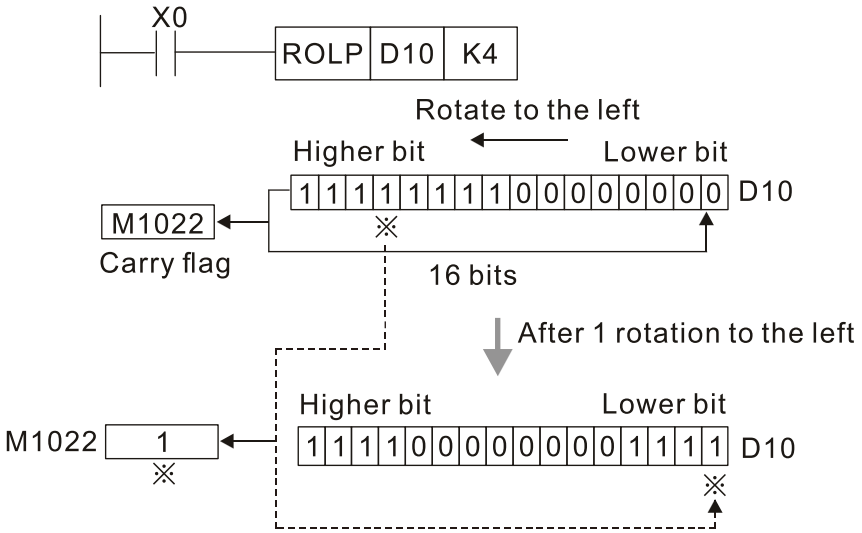

API 40	ZRST	P	(D1) (D2)	Clear range

	Bit device			Word device							
	X	Y	M	K	H	KnX	KnY	KnM	T	C	D
D1		*	*						*	*	*
D2		*	*						*	*	*

Notes on operand usage:
Number of operand D_1 operand ≤ number of operand D_2
Operands D_1, D_2 must designate the same type of device
Please refer to the function specifications table for each device in series for the scope of device usage

16-bit command (5 STEP)

ZRST	Continuous execution type	ZRSTP	Pulse execution type

32-bit command

-	-	-	-

Flag signal: none

Explanation

- **D1**: Clear range's initial device. **D2**: Clear range's final device.
- When the number of operand **D1** > number of operand **D2**, only the operand designated by **D2** will be cleared.

Example

- When X0 is ON, auxiliary relays M300–M399 will be cleared and changed to OFF.
- When X1 is ON, 16-bit counters C0–C127 will all be cleared. (Writes 0 and clears and changes contact and coil to OFF).
- When X10 is ON, timer T0–T127 will all be cleared. (Writes 0 and clears and changes contact and coil to OFF).
- When X3 is ON, the data in data registers D0–D100 will be cleared and set as 0.

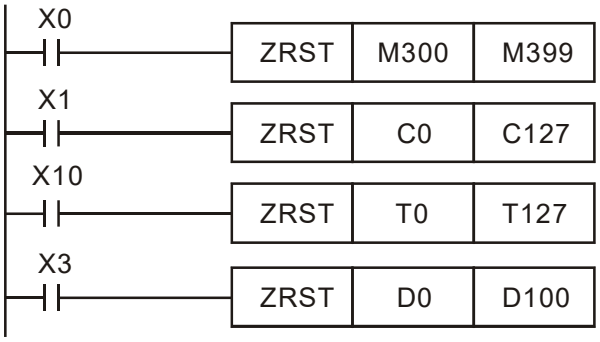

Remark

- Devices can independently use the clear command (RST), such as bit device Y, M and word device T, C, D.

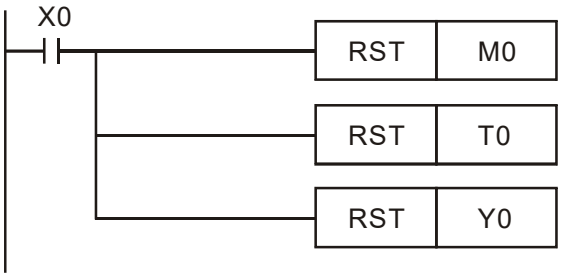

API 41	D	DECO	P	S D n	Decoder

	Bit device			Word device							
	X	Y	M	K	H	KnX	KnY	KnM	T	C	D
S	*	*	*	*	*				*	*	*
D		*	*				*	*	*	*	*
n				*	*						

Notes on operand usage: none

16-bit command (7 STEP)

DECO	Continuous execution type	DECOP	Pulse execution type

32-bit command (13 STEP)

DDECO	Continuous execution type	DDECOP	Pulse execution type

Flag signal: none

Explanation

- **S**: Decoding source device. **D**: Device that saves the decoding result. **n**: Length of decoding bit.
- Decodes with the lower "n" bit, and saves the length of "2^n" bit in **D**.
- This command usually uses pulse execution type command (DECOP).
- When **D** is the bit device, n = 1–8, when **D** is the word device, n = 1–4.

Example 1

- When Dis the bit device, the valid range of n is 0< **n** ≤ 8. If n = 0 or n > 8, a fault will occur.
- When **n** = 8, the maximum decoding will be 2^8 = 256 points.
- When M200 switches from OFF to ON, the content of X0–X2 is decoded to M100–M107.
- If **S** = 3, M103 (the third digit starting from M100) = ON.
- When the command is executed, M200 turns to OFF. The ones that are decoded and outputted act as usual.

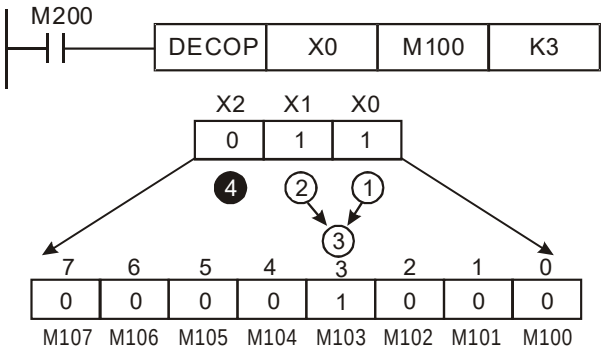

Example 2

- When **D** is word device, the valid range of n is 0< **n** ≤ 4. If **n** = 0 or **n** > 4, the fault occurs.
- When **n** = 4, the maximum decoding will be 2^4 = 16 points.
- When M200 switches from OFF to ON, the content of D10 (b2–b0) is decoded to D20 (b7–b0). The unused digits (b15–b8) of D20 become 0.
- The lower 3 digits of D10 are decoded and saved in the lower 8 digits of D20, the upper 8 digits are 0.
- When the command is executed, M200 turns to OFF. The ones that are decoded and outputted act as usual.

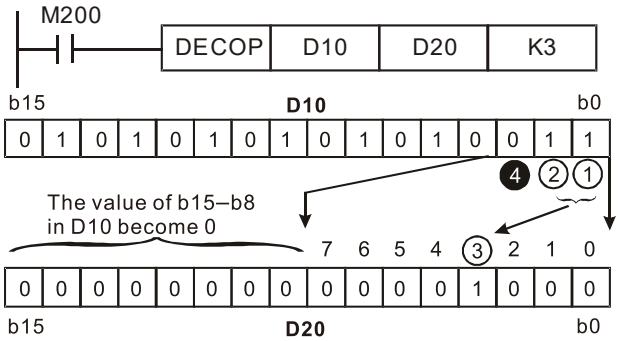

API 42	D	ENCO	P	S D n	Encoder

	Bit device			Word device							
	X	Y	M	K	H	KnX	KnY	KnM	T	C	D
S	*	*	*						*	*	*
D							*	*	*	*	*
n				*	*						

Notes on operand usage: none

16-bit command (7 STEP)

ENCO	Continuous execution type	ENCOP	Pulse execution type

32-bit command (13 STEP)

DENCO	Continuous execution type	DENCOP	Pulse execution type

Flag signal: none

Explanation

- **S**: Encoding source device. **D**: Device that saves the encoding result. **n**: Length of encoding bit.
- Encodes the data of lower "2^n" bit length from encoding source device **S**, and saves the encoding result in **D**.
- If multiple digits of encoding source device are 1, the command will process the first digit starting from high digit.
- This command usually uses pulse execution type command (ENCOP).
- When **S** is the bit device, **n** = 1–8, when **S** is the word device, **n** = 1–4.

Example 1

- When **S** is the bit device, the valid range of **n** is 0< **n** ≤ 8. If **n** = 0 or **n** > 8, a fault will occur.
- When **n** = 8, the maximum decoding will be 2^8 = 256 points.
- When X0 switches from OFF to ON, the content of 2^3 digit (M0–M7) is encoded and saved in the lower 3 digits (b2–b0). The unused digits (b15–b3) in D0 become 0.
- When the command is executed, X0 turns to OFF. The data in **D** is unchanged.

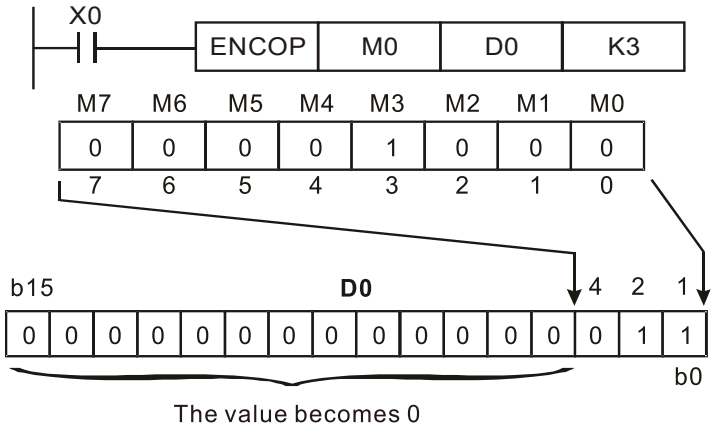

Example 2

- When **S** is word device, the valid range of **n** is 0< **n** ≤ 4. If **n** = 0 or **n** > 4, the fault occurs.
- When **n** = 4, the maximum decoding will be 2^4 = 16 points.
- When X0 switches from OFF to ON, 2^3 digit data of D10 (b0–b7) is encoded and saved in the lower 3 digits (b2–b0) of D20. The unused digits (b15–b3) of D20 become 0. (b8–b15 in D10 are invalid data)
- When the command is executed, X0 turns to OFF. The data in **D** is unchanged.

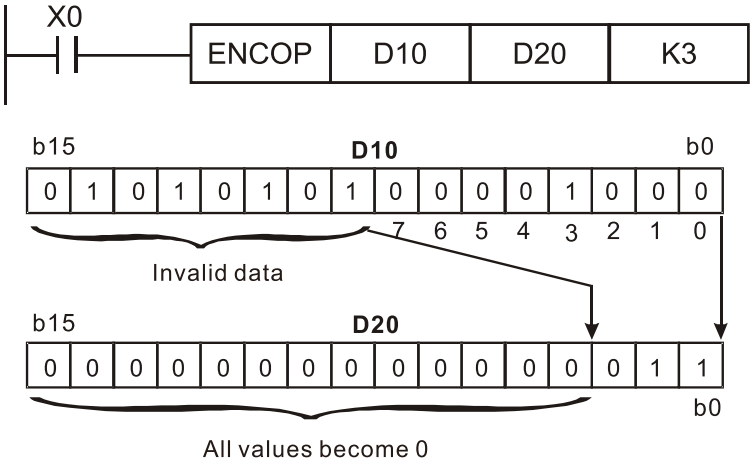

API 43	D	SUM	P	S D	ON bit number

	Bit device			Word device							
	X	Y	M	K	H	KnX	KnY	KnM	T	C	D
S				*	*	*	*	*	*	*	*
D									*	*	*

Notes on operand usage: none

16-bit command (5 STEP)

SUM	Continuous execution type	SUMP	Pulse execution type

32-bit command (9 STEP)

DSUM	Continuous execution type	DSUMP	Pulse execution type

Flag signal: M1020

Explanation

- **S**: Source device. **D**: Destination of saving counter values.
- The total amount of all digits that is “1” in **S** will be saved in **D**.
- **D** will use 2 registers when use the 32-bit command.
- Arithmetic elements **S** and **D** use F device, and can only use 16-bit command.
- If there is no bit is ON, the flag signal M1020 will be ON.

Example

- When M200 = ON, the total amount of content “1” digit in D0’s 16-bit command will be saved in D2.

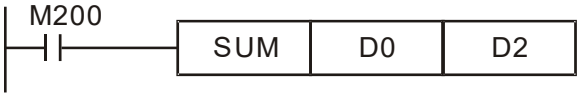

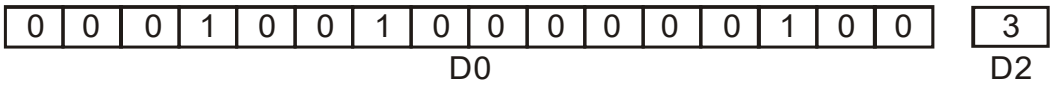

API 44	D	BON	P	S D n	ON bit judgement

	Bit device			Word device							
	X	Y	M	K	H	KnX	KnY	KnM	T	C	D
S				*	*	*	*	*	*	*	*
D		*	*						*	*	*
n				*	*						

Notes on operand usage: none

16-bit command (7 STEP)

BON	Continuous execution type	BONP	Pulse execution type

32-bit command (9 STEP)

DBON	Continuous execution type	DBONP	Pulse execution type

Flag signal: none

Explanation

- **S**: Source device. **D**: Destination of saving judging result. **n**: assign judged digit (numbering from 0)
- The status of specific digit from source device is shown on target position.
- Arithmetic element **S** uses F device, and can only use the 16-bit command.
- The valid range of arithmetic element n: n = 0–15 (16-bit), n = 0–31 (32-bit).

Example

- When X0 = ON, if the 15th digit of D0 is “1”, M0 is ON. If it is “0”, M0 is OFF.
- When X0 turns to OFF, M0 remains previous status.

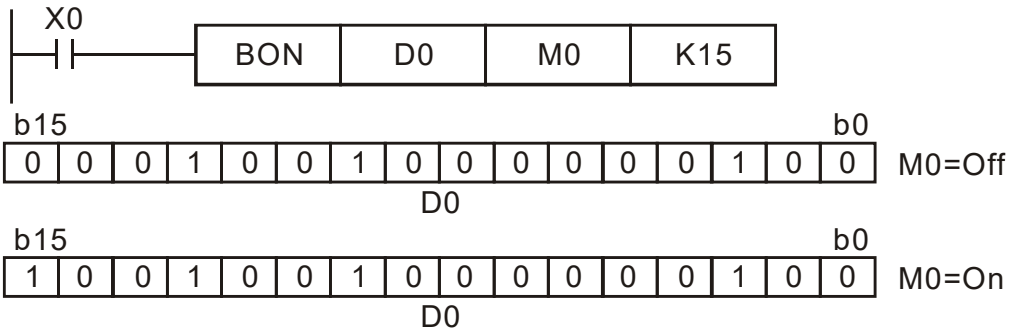

API 49	D	FLT	P	S D	BIN whole number → binary decimal transformation

	Bit device			Word device							
	X	Y	M	K	H	KnX	KnY	KnM	T	C	D
S		*	*						*	*	*
D		*	*						*	*	*

Notes on operand usage: Please refer to the function specifications table for each device in series for the scope of device usage
The operand D will occupy 2 consecutive points

16-bit command (5 STEP)

FLT	Continuous execution type	FLTP	Pulse execution type

32-bit command (9 STEP)

DFLT	Continuous execution type	DFLTP	Pulse execution type

Flag signal: none

Explanation

- **S**: Transformation source device. **D**: Device storing transformation results.
- Transforms BIN whole number into a binary decimal value.

Example

- When M200 is ON, converts the whole number of values corresponding to D0 and D1 into floating point numbers, which are placed in D20 and D21.

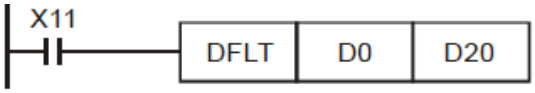

API 110	D	ECMP	P	S1 S2 D	Comparison of binary floating point numbers

	Bit device			Word device							
	X	Y	M	K	H	KnX	KnY	KnM	T	C	D
S1				*	*						*
S2				*	*						*
D				*	*						*

Notes on operand usage:
The operand D occupies three consecutive points
Please refer to the function specifications table for each device in series for the scope of device usage

16-bit command

-	-	-	-

32-bit command (13 STEP)

DECMP	Continuous execution type	DECMP P	Pulse execution type

Flag signal: none

Explanation

- **S_1**: Comparison of binary floating point numbers value 1. **S_2**: Comparison of binary floating point numbers value 2. **D**: Results of comparison, occupies 3 consecutive points.
- When binary floating point number 1 is compared with comparative binary floating point number 2, the result of comparison (>, =, <) will be expressed in **D**.
- **If the source operand S_1** or **S_2** designates a constant K or H, the command will transform the constant to a binary floating-point number for the purpose of comparison.

Example

- When the designated device is M10, it will automatically occupy M10–M12.
- When X0 = ON, the DECMP command executes, and one of M10–M12 will be ON. When X0 = OFF, the DECMP command will not execute, and M10–M12 will remain in the X0 = OFF state.
- If results in the form of ≥, ≤, or ≠ are needed, they can be obtained by series and parallel connection of M10–M12.
- Use the RST or ZRST command to clear the result.

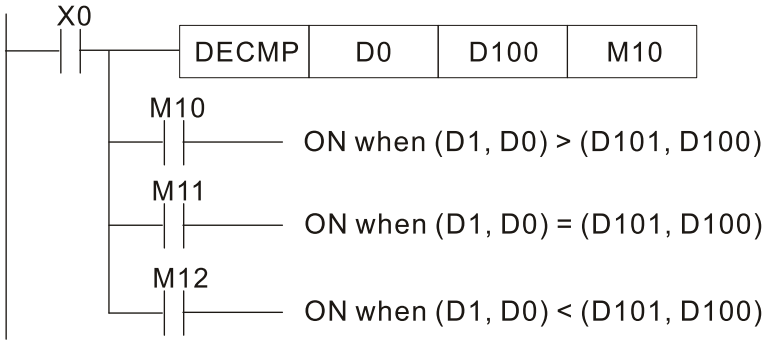

API 111	D	EZCP	P	S1 S2 S D	Comparison of binary floating point number range

	Bit device			Word device							
	X	Y	M	K	H	KnX	KnY	KnM	T	C	D
S1				*	*						*
S2				*	*						*
S				*	*						*
D		*	*								

Notes on operand usage:
The operand D occupies three consecutive points
Please refer to the function specifications table for each device in series for the scope of device usage

16-bit command

-	-	-	-

32-bit command (17 STEP)

DEZCP	Continuous execution type	DEZCP P	Pulse execution type

Flag signal: none

Explanation

- **S_1**: Lower limit of binary floating point number in range comparison. **S_2**: Upper limit of binary floating point number in range comparison. **S**: Comparison of binary floating point numerical values. **D**: Results of comparison, occupies 3 consecutive points.
- Comparison of binary floating point numerical value **S** with binary floating point number lower limit value **S_1** and binary floating point number upper limit value **S_2**; the results of comparison are expressed in **D**.
- **If the source operand S_1** or **S_2** designates a constant K or H, the command will transform the constant to a binary floating-point number for the purpose of comparison.
- When the lower limit binary floating point number **S_1** is greater than the upper limit binary floating point number **S_2**, a command will be issued to perform comparison with the upper and lower limits using the binary floating point number lower limit value **S_1**.

Example

- When the designated device is M0, it will automatically occupy M0–M2.
- When X0 = ON, the DEZCP command will be executed, and one of M0–M2 will be On. When X0 = OFF, the EZCP command will not execute, and M0–M2 will continue in the X0 = OFF state.
- Please use the RST or ZRST command to clear the result.

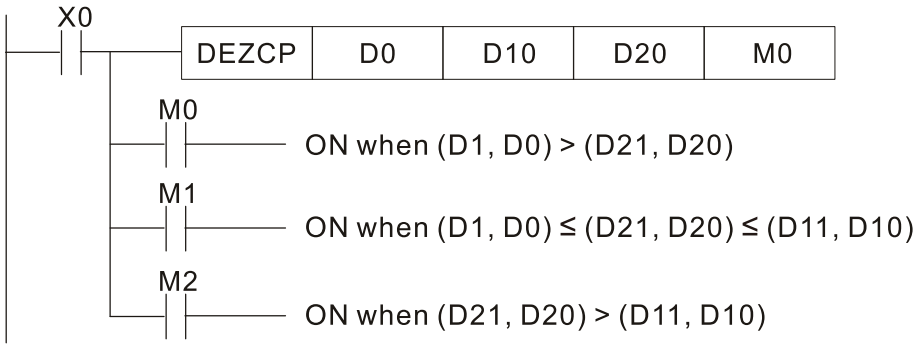

API 116	D	RAD	P	(S) (D)	Angle → Diameter

	Bit device			Word device							
	X	Y	M	K	H	KnX	KnY	KnM	T	C	D
S				*	*						*
D											*

Notes on operand usage:
Please refer to the function specifications table for each device in series for the scope of device usage

16-bit command

-	-	-	-

32-bit command (9 STEP)

DRAD	Continuous execution type	DRADP	Pulse execution type

Flag signal: none

Explanation

- **S**: data source (angle). **D**: result of transformation (diameter).
- Uses the following formula to convert angles to radians.
- Diameter = Angle × (π/180)

Example

- When X0 = ON, the angle of the designated binary floating point number (D1, D0) will be converted to radians and stored in (D11, D10), with the content consisting of a binary floating point number.

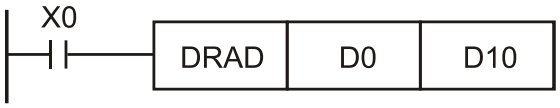

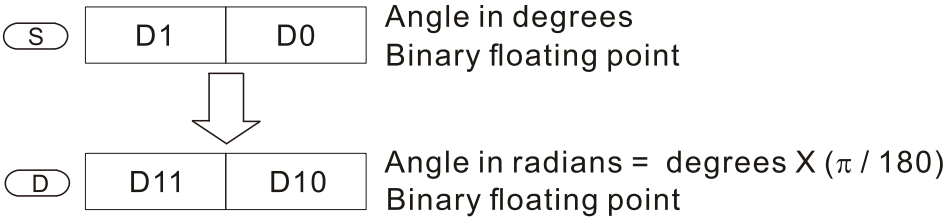

API 117	D	DEG	P	(S) (D)	Diameter → angle

	Bit device			Word device							
	X	Y	M	K	H	KnX	KnY	KnM	T	C	D
S				*	*						*
D											*

Notes on operand usage:
Please refer to the function specifications table for each device in series for the scope of device usage

16-bit command

-	-	-	-

32-bit command (9 STEP)

DDEG	Continuous execution type	DDEGP	Pulse execution type

Flag signal: none

Explanation

- **S**: data source (diameter). **D**: results of transformation (angle).
- Uses the following formula to convert radians to an angle.
- Angle = Diameter × (180/π)

Example

- When X0 = ON, angle of the designated binary floating point number (D1, D0) in radians will be converted to an angle and stored in (D11, D10), with the content consisting of a binary floating point number.

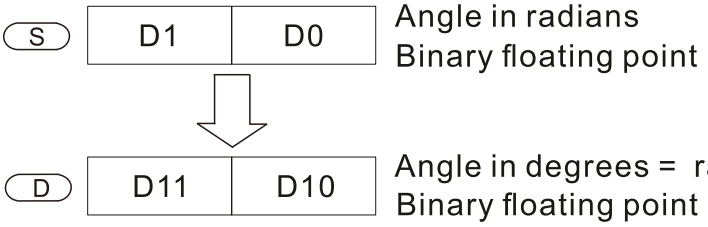

API 120	D	EADD	P	S1 S2 D	Adding binary floating point numbers

	Bit device			Word device							
	X	Y	M	K	H	KnX	KnY	KnM	T	C	D
S1				*	*						*
S2				*	*						*
D											*

Notes on operand usage:
Please refer to the function specifications table for each device in series for the scope of device usage

16-bit command

-	-	-	-

32-bit command (9 STEP)

DEADD	Continuous execution type	DEADDP	Pulse execution type

Flag signal: none

Explanation

- **S_1**: addend. **S_2**: augend. **D**: sum.
- When the content of the register designated by **S_2** is added to the content of the register designated by **S_1**, and the result is stored in the register designated by **D**. Addition is performed entirely using binary floating-point numbers.
- **If the source operand S_1** or **S_2** designates a constant K or H, the command will transform that constant into a binary floating point number for use in addition.
- **In the situation when S_1** and **S_2** designate identical register numbers, if a "continuous execution" command is employed, when conditional contact is On, the register will perform addition once during each scan. Pulse execution type commands (DEADDP) are generally used under ordinary circumstances.

Example

- When X0 = ON, a binary floating point number (D1, D0) will be added to a binary floating point number (D3, D2), and the results stored in (D11, D10).

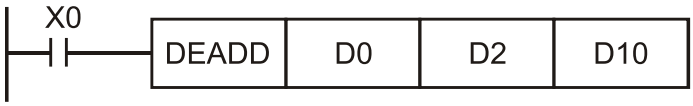

- When X2 = ON, a binary floating point number (D11, D10) will be added to K1234 (which has been automatically converted to a binary floating-point number), and the results stored in (D21, D20).

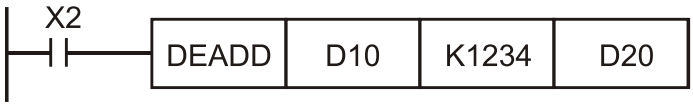

API 121	D	ESUB	P	S1 S2 D	Subtraction of binary floating point numbers

	Bit device			Word device							
	X	Y	M	K	H	KnX	KnY	KnM	T	C	D
S1				*	*						*
S2				*	*						*
D											*

Notes on operand usage:
Please refer to the function specifications table for each device in series for the scope of device usage

16-bit command

-	-	-	-

32-bit command (13 STEP)

DESUB	Continuous execution type	DESUBP	Pulse execution type

Flag signal: none

Explanation

- **S_1**: minuend. **S_2**: subtrahend. **D**: difference.
- When the content of the register designated by **S_2** is subtracted from the content of the register designated by **S_1**, the difference will be stored in the register designated by **D**; subtraction is performed entirely using binary floating-point numbers.
- **If the source operand S_1** or **S_2** designates a constant K or H, the command will transform that constant into a binary floating point number for use in subtraction.
- **In the situation when S_1** and **S_2** designate identical register numbers, if a "continuous execution" command is employed, when conditional contact is On, the register will perform addition once during each scan. Pulse execution type commands (DESUBP) are generally used under ordinary circumstances.

Example

- When X0 = ON, a binary floating point number (D1, D0) will be subtracted to a binary floating point number (D3, D2), and the results stored in (D11, D10).

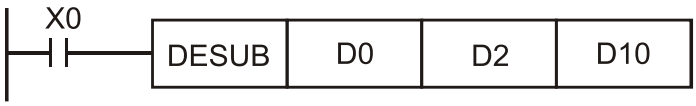

- When X2 = ON, the binary floating point number (D1, D0) will be subtracted from K1234 (which has been automatically converted to a binary floating-point number), and the results stored in (D11, D10).

API 122	D	EMUL	P	S1 S2 D	Multiplication of binary floating point numbers

	Bit device			Word device							
	X	Y	M	K	H	KnX	KnY	KnM	T	C	D
S1				*	*						*
S2				*	*						*
D											*

Notes on operand usage:
Please refer to the function specifications table for each device in series for the scope of device usage

16-bit command

-	-	-	-

32-bit command (13 STEP)

DEMUL	Continuous execution type	DEMULP	Pulse execution type

Flag signal: none

Explanation

- **S_1**: multiplicand. **S_2**: multiplier. **D**: product.
- When the content of the register designated by **S_1** is multiplied by the content of the register designated by **S_2**, the product will be stored in the register designated by **D**; multiplication is performed entirely using binary floating-point numbers.
- **If the source operand S_1** or **S_2** designates a constant K or H, the command will transform that constant into a binary floating point number for use in multiplication.
- **In the situation when S_1** and **S_2** designate identical register numbers, if a "continuous execution" command is employed, when conditional contact is On, the register will perform multiplication once during each scan. Pulse execution type commands (DEMULP) are generally used under ordinary circumstances.

Example

- When X1 = ON, the binary floating point number (D1, D0) will be multiplied by the binary floating point number (D11, D10), and the product will be stored in the register designated by (D21, D20).

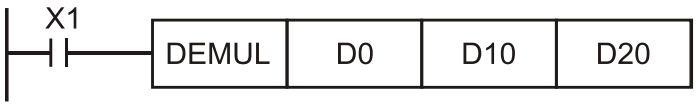

- When X2 = ON, the binary floating point number (D1, D0) will be multiplied from K1234 (which has been automatically converted to a binary floating-point number), and the results stored in (D11, D10).

API 123	D	EDIV	P	S1 S2 D	Division of binary floating point numbers

	Bit device			Word device							
	X	Y	M	K	H	KnX	KnY	KnM	T	C	D
S1				*	*						*
S2				*	*						*
D											*

Notes on operand usage:
Please refer to the function specifications table for each device in series for the scope of device usage

16-bit command

-	-	-	-

32-bit command (13 STEP)

DEDIV	Continuous execution type	DEDIVP	Pulse execution type

Flag signal: none

Explanation

- **S_1**: dividend. **S_2**: divisor. **D**: quotient and remainder.
- When the content of the register designated by **S_1** is divided by the content of the register designated by **S_2**, the quotient will be stored in the register designated by **D**; division is performed entirely using binary floating-point numbers.
- **If the source operand S_1** or **S_2** designates a constant K or H, the command will transform that constant into a binary floating point number for use in division.

Example

- When X1 = ON, the binary floating point number (D1, D0) will be divided by the binary floating point number (D11, D10), and the quotient stored in the register designated by (D21, D20).

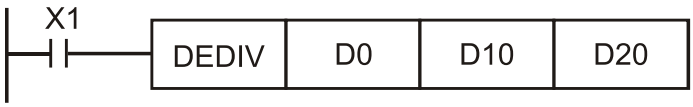

- When X2 = ON, the binary floating point number (D1, D0) will be divided by K1,234 (which has been automatically converted to a binary floating-point number), and the results stored in (D11, D10).

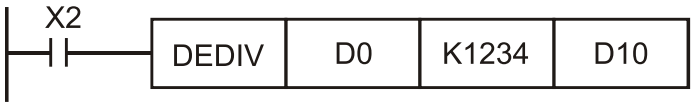

API 124	D	EXP	P	S D	Binary floating point number obtain exponent

	Bit device			Word device							
	X	Y	M	K	H	KnX	KnY	KnM	T	C	D
S				*	*						*
D											*

Notes on operand usage:
Please refer to the function specifications table for each device in series for the scope of device usage

16-bit command

-	-	-	-

32-bit command (9 STEP)

DEXP	Continuous execution type	DEXPP	Pulse execution type

Flag signal: none

Explanation

- **S**: operation source device. **D**: operation results device.
- Taking e = 2.71828 as a base, **S** is the exponent in the EXP operation.
- [**D** +1, **D**]=EXP[**S +1, S**]
- Valid regardless of whether the content of **S** has a positive or negative value. The designated register D must have a 32-bit data format. This operation is performed using floating-point numbers, and **S** must therefore be converted to a floating point number.
- Content of operand **D** = e^{S} ; e = 2.71828, **S** is the designated source data

Example

- When M0 is ON, the value of (D1, D0) will be converted to a binary floating point number, which will be stored in register (D11, D10).
- When M1 is ON, the EXP operation is performed on the exponent of (D11, D10); its value is a binary floating point number stored in register (D21, D20).

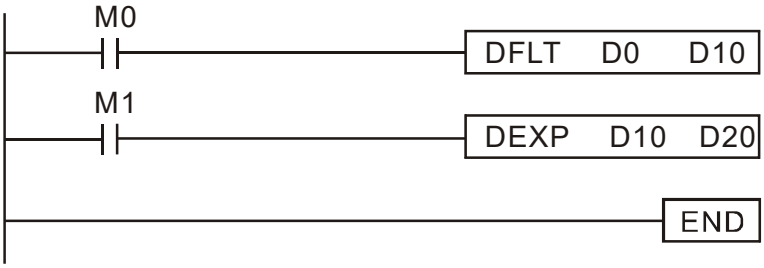

API 125	D	LN	P	S D	Binary floating point number obtain logarithm

	Bit device			Word device							
	X	Y	M	K	H	KnX	KnY	KnM	T	C	D
S				*	*						*
D											*

Notes on operand usage:
Please refer to the function specifications table for each device in series for the scope of device usage

16-bit command

-	-	-	-

32-bit command (9 STEP)

DLN	Continuous execution type	DLNP	Pulse execution type

Flag signal: none

Explanation

- **S**: operation source device. **D**: operation results device.
- Taking e = 2.71828 as a base, **S** is the exponent in the EXP operation.
- [**D** +1, **D**] = EXP [**S +1, S**]
- Valid regardless of whether the content of **S** has a positive or negative value. The designated register D must have a 32-bit data format. This operation is performed using floating-point numbers, and **S** must therefore be converted to a floating point number.
- Content of operand **D** = e^{S} ; e = 2.71828, **S** is the designated source data

Example

- When M0 is ON, the value of (D1, D0) will be converted to a binary floating point number, which will be stored in register (D11, D10).
- When M1 is ON, the EXP operation is performed on the exponent of (D11, D10); its value is a binary floating point number stored in register (D21, D20).

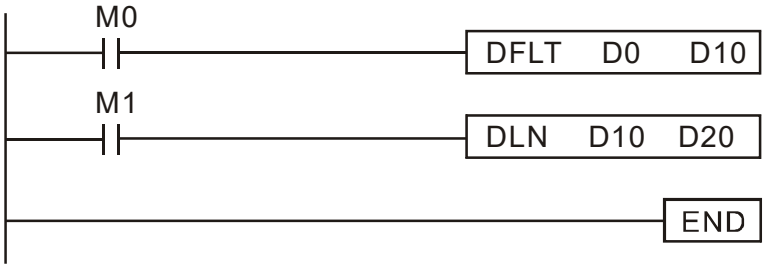

API 127	D	ESQR	P	S D	Binary floating point number find square root

	Bit device			Word device							
	X	Y	M	K	H	KnX	KnY	KnM	T	C	D
S				*	*						*
D											*

Notes on operand usage:
Please refer to the function specifications table for each device in series for the scope of device usage

16-bit command

-	-	-	-

32-bit command (9 STEP)

DESQR	Continuous execution type	DESQR P	Pulse execution type

Flag signal: none

Explanation

- **S**: source device for which square root is desired **D**: result of finding square root.
- When the square root is taken of the content of the register designated by **S**, the result is temporarily stored in the register designated by **D**. Taking square roots is performed entirely using binary floating-point numbers.
- If the source operand **S** refers to a constant K or H, the command will transform that constant into a binary floating point number for use in the operation.

Example

- When X0 = ON, the square root is taken of the binary floating point number (D1, D0), and the result is stored in the register designated by (D11, D10).

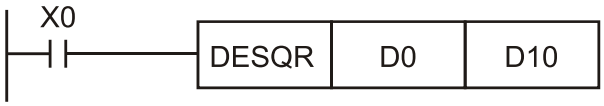

$\sqrt{(D1 \cdot D0)} \longrightarrow (D11 \cdot D10)$

Binary floating point Binary floating point

- When X2 = ON, the square root is taken of K1,234 (which has been automatically converted to a binary floating-point number), and the results stored in (D11, D10).

API 129	D	INT	P	S D	Binary floating point number → BIN whole number transformation

	Bit device			Word device							
	X	Y	M	K	H	KnX	KnY	KnM	T	C	D
S											*
D											*

Notes on operand usage:
Please refer to the function specifications table for each device in series for the scope of device usage

16-bit command (5 STEP)

INT	Continuous execution type	INTP	Pulse execution type

32-bit command (9 STEP)

DINT	Continuous execution type	DINTP	Pulse execution type

Flag signal: none

Explanation

- **S**: the source device to be transformed. **D**: results of transformation.
- The content of the register designated by **S** is transformed from a binary floating point number format into a BIN whole number, and is temporarily stored in **D**. The BIN whole number floating point number will be discarded.
- The action of this command is the opposite of that of command API 49 (FLT).

Example

- When X0 = ON, the binary floating point number (D1, D0) is transformed into a BIN whole number, and the result is stored in (D10); the BIN whole number floating point number will be discarded.

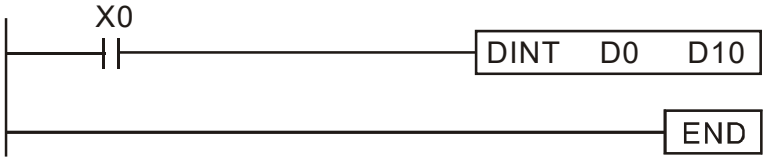

API 130	D	SIN	P	S D	Binary floating point number SIN operation

	Bit device			Word device							
	X	Y	M	K	H	KnX	KnY	KnM	T	C	D
S				*	*						*
D											*

Notes on operand usage:
Please refer to the function specifications table for each device in series for the scope of device usage

16-bit command			
-	-	-	-

32-bit command (9 STEP)			
DSIN	Continuous execution type	DSINP	Pulse execution type

Flag signal: none

Explanation

- **S**: the designated source value. **D**: the SIN value result.
- **S** is the designated source in radians.
- The value in radians (RAD) is equal to (angle ×π/180).
- The SIN obtained from the source value designated by **S** is stored in **D**.

  The following figure displays the relationship between the arc and SIN results:

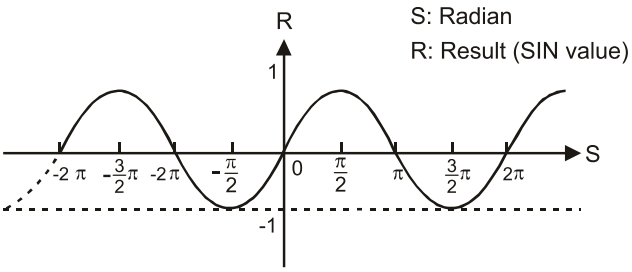

Example

- When X0 = ON, the SIN value of the designated binary floating point number (D1, D0) in radians (RAD) will be stored in (D11, D10), with the content consisting of a binary floating point number.

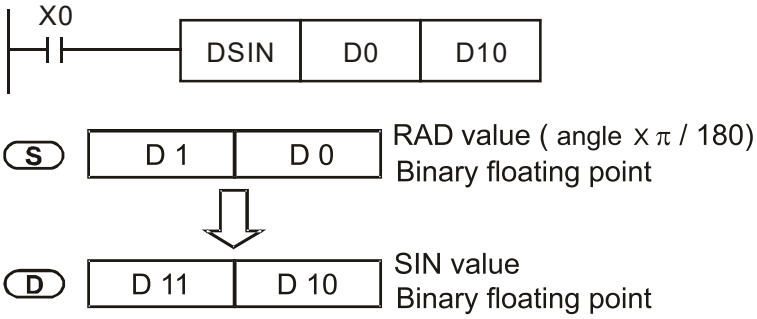

API 131	D	COS	P	(S) (D)	Binary floating point number COS operation

	Bit device			Word device							
	X	Y	M	K	H	KnX	KnY	KnM	T	C	D
S				*	*						*
D											*

Notes on operand usage:
Please refer to the function specifications table for each device in series for the scope of device usage

16-bit command

-	-	-	-

32-bit command (9 STEP)

DCOS	Continuous execution type	DCOSP	Pulse execution type

Flag signal: none

Explanation

- **S**: the designated source value. **D**: the COS value result.
- The source designated by S can be given as radians or an angle; this is decided by flag M1018.
- When M1018 = OFF, the operation is in radians mode, where the radians (RAD) value is equal to (angle ×π/180).
- When M1018 = ON, the operation is in the angle mode, where the angular range is 0°≤ angle < 360°.
- When calculation results yield 0, M1020 = ON.
- The COS obtained from the source value designated by **S** is stored in **D**.
  The following figure displays the relationship between the arc and SIN results:

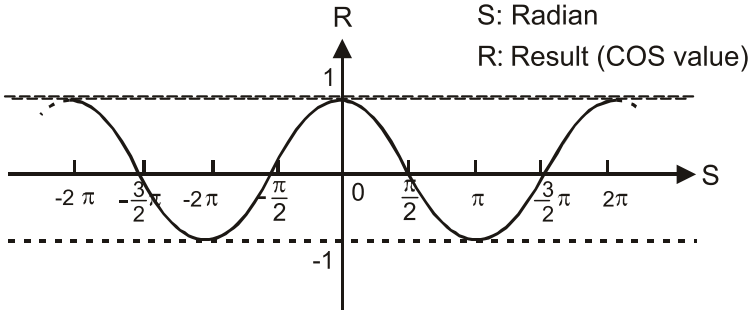

Example

- When X0 = ON, the COS value of the designated binary floating point number (D1, D0) in radians will be stored in (D11, D10), with the content consisting of a binary floating point number.

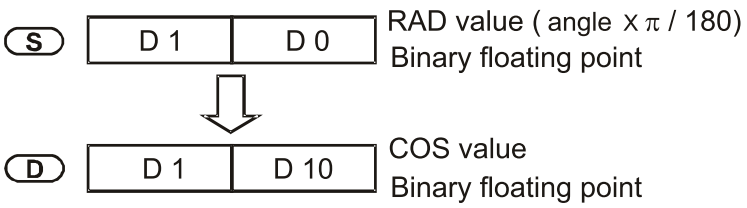

API 132	D	TAN	P	(S) (D)	Binary floating point number TAN operation

	Bit device			Word device							
	X	Y	M	K	H	KnX	KnY	KnM	T	C	D
S				*	*						*
D											*

Notes on operand usage:
Please refer to the function specifications table for each device in series for the scope of device usage

16-bit command

-	-	-	-

32-bit command (9 STEP)

DTAN	Continuous execution type	DTANP	Pulse execution type

Flag signal: none

Explanation

- **S**: the designated source value. **D**: the TAN value result.
- The source designated by **S** can be given as radians or an angle; this is decided by flag M1018.
- When M1018 = OFF, the operation is in radians mode, where the radians (RAD) value is equal to (angle × π/180).
- When M1018 = ON, the operation is in the angle mode, where the angular range is 0°≤ angle <360°.
- When calculation results yield 0, M1020 = ON.
- The TAN obtained from the source value designated by **S** is stored in **D**.
  The following figure displays the relationship between the arc and TAN results:

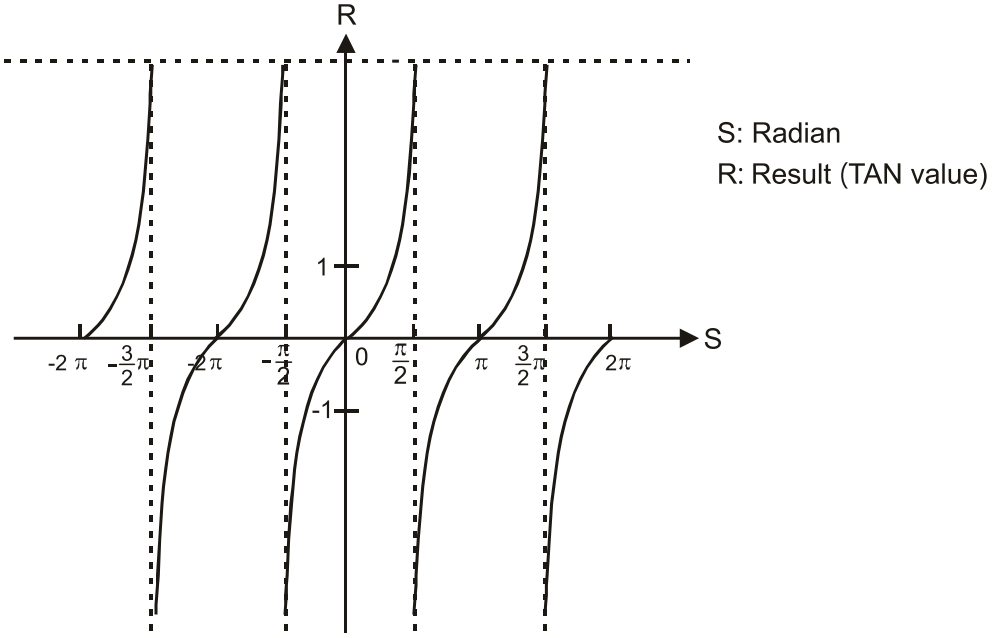

Example

- When X0 = ON, the TAN value of the designated binary floating point number (D1, D0) in radians (RAD) will be stored in (D11, D10), with the content consisting of a binary floating point number.

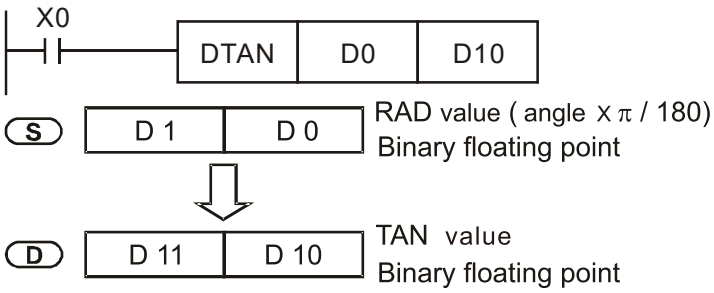

API 133	D	ASIN	P	(S) (D)	Binary floating point number ASIN operation

	Bit device			Word device							
	X	Y	M	K	H	KnX	KnY	KnM	T	C	D
S				*	*						*
D											*

Notes on operand usage:
Please refer to the function specifications table for each device in series for the scope of device usage

16-bit command

-	-	-	-

32-bit command (9 STEP)

DASIN	Continuous execution type	DASINP	Pulse execution type

Flag signal: none

Explanation

- **S**: the designated source (binary floating point number). **D**: the ASIN value result.
- ASIN value = $\sin^{-1}$

  The figure below shows the relationship between input data and result:

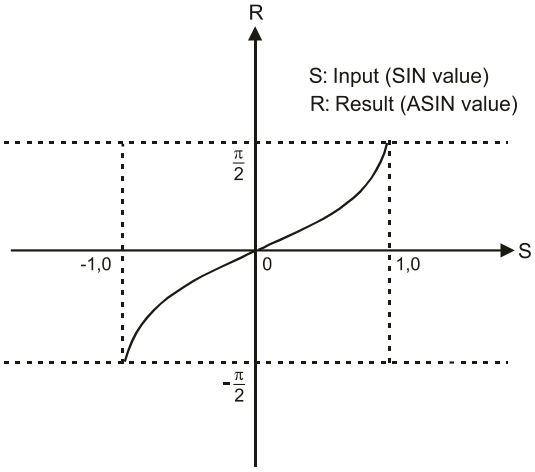

Example

- When X0 = ON, the ASIN value obtained from the designated binary floating point number (D1, D0) will be stored in (D11, D10), with the content consisting of a binary floating point number.

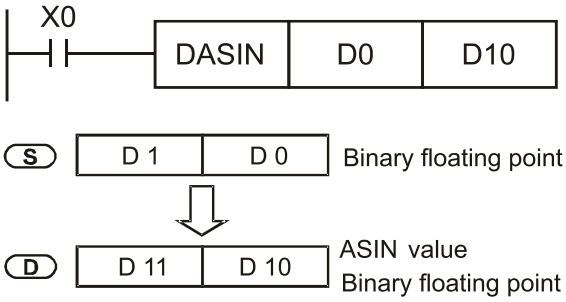

API 134	D	ACOS	P	S D	Binary floating point number ACOS operation

	Bit device			Word device							
	X	Y	M	K	H	KnX	KnY	KnM	T	C	D
S				*	*						*
D											*

Notes on operand usage:
Please refer to the function specifications table for each device in series for the scope of device usage

16-bit command			
-	-	-	-

32-bit command (9 STEP)			
DACOS	Continuous execution type	DACOS P	Pulse execution type

Flag signal: none

Explanation

- **S**: the designated source (binary floating point number). **D**: the ACOS value result.
- ACOS value = $\cos^{-1}$

  The figure below shows the relationship between input data and result:

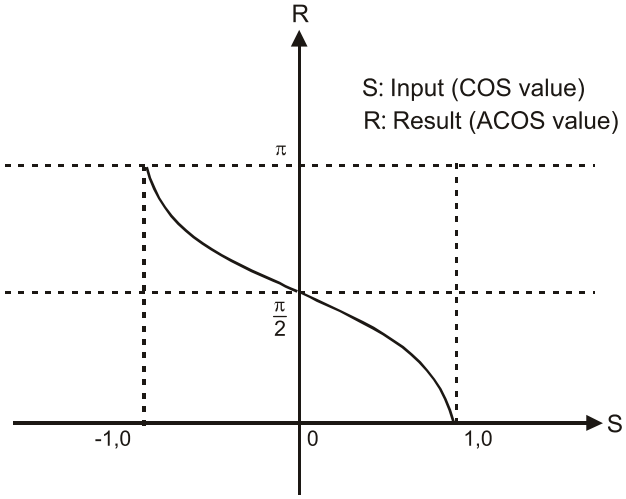

Example

- When X0 = ON, the ACOS value obtained from the designated binary floating point number (D1, D0) will be stored in (D11, D10), with the content consisting of a binary floating point number.

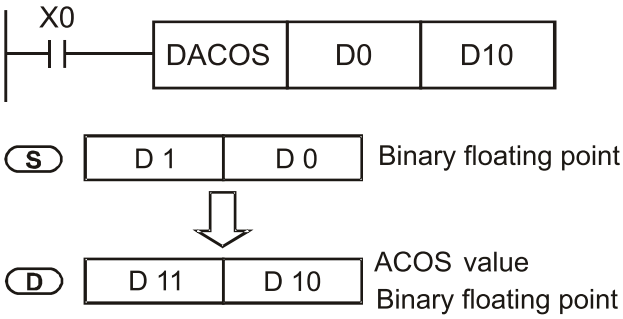

API 135	D	ATAN	P	S D	Binary floating point number ATAN operation

	Bit device			Word device							
	X	Y	M	K	H	KnX	KnY	KnM	T	C	D
S				*	*						*
D											*

Notes on operand usage:
Please refer to the function specifications table for each device in series for the scope of device usage

16-bit command

-	-	-	-

32-bit command (9 STEP)

DATAN	Continuous execution type	DATANP	Pulse execution type

Flag signal: none

Explanation

- **S**: the designated source (binary floating point number). **D**: the ATAN value result.
- ATAN value = $\tan^{-1}$

  The figure below shows the relationship between input data and result:

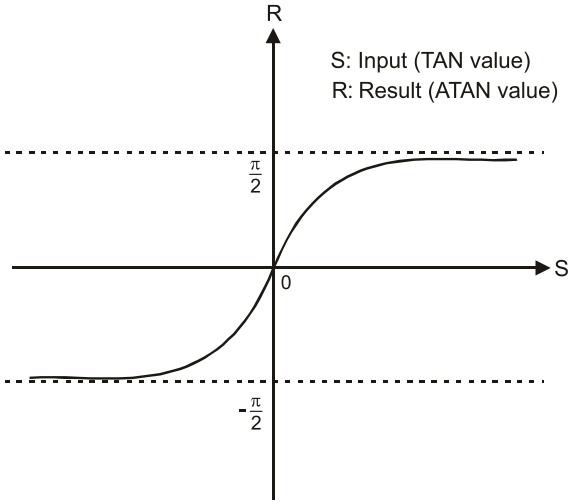

Example

- When X0 = ON, the TAN value obtained from the designated binary floating point number (D1, D0) will be stored in (D11, D10), with the content consisting of a binary floating point number.

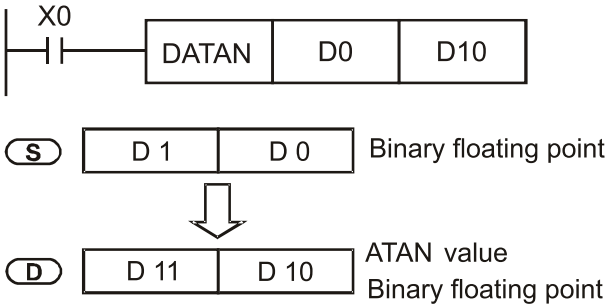

API 136	D	SINH	P	S D	Binary floating point number SINH operation

	Bit device			Word device							
	X	Y	M	K	H	KnX	KnY	KnM	T	C	D
S				*	*						*
D											*

Notes on operand usage:
Please refer to the function specifications table for each device in series for the scope of device usage

16-bit command

-	-	-	-

32-bit command (9 STEP)

DSINH	Continuous execution type	DSINHP	Pulse execution type

Flag signal: none

Explanation

- **S**: the designated source (binary floating point number). **D**: the SINH value result.
- SINH value = $(e^{s}-e^{-s}) \div 2$

Example

- When X0 = ON, the SINH value obtained from the designated binary floating point number (D1, D0) will be stored in (D11, D10), with the content consisting of a binary floating point number.

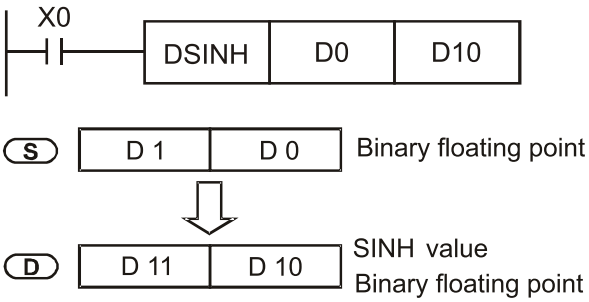

API 137	D	COSH	P	(S) (D)	Binary floating point number COSH operation

	Bit device			Word device							
	X	Y	M	K	H	KnX	KnY	KnM	T	C	D
S				*	*						*
D											*

Notes on operand usage:
Please refer to the function specifications table for each device in series for the scope of device usage

16-bit command

-	-	-	-

32-bit command (9 STEP)

DCOSH	Continuous execution type	DCOSH P	Pulse execution type

Flag signal: none

Explanation

- **S**: the designated source (binary floating point number). **D**: the COSH value result.
- COSH value = $(e^{s}+e^{-s}) \div 2$

Example

- When X0 = ON, the COSH value obtained from the designated binary floating point number (D1, D0) will be stored in (D11, D10), with the content consisting of a binary floating point number.

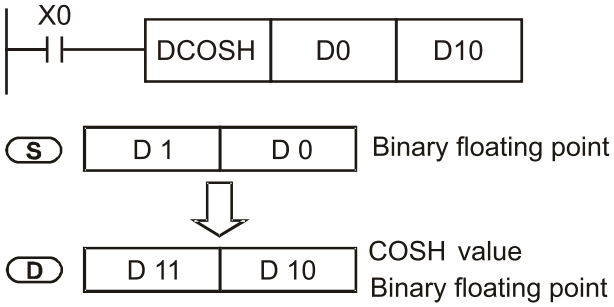

API 138	D	TANH	P	(S) (D)	Binary floating point number TANH operation

	Bit device			Word device							
	X	Y	M	K	H	KnX	KnY	KnM	T	C	D
S				*	*						*
D											*

Notes on operand usage:
Please refer to the function specifications table for each device in series for the scope of device usage

16-bit command

-	-	-	-

32-bit command (9 STEP)

DTANH	Continuous execution type	DTANH P	Pulse execution type

Flag signal: none

Explanation

- **S**: the designated source (binary floating point number). **D**: the TANH value result.
- TANH value = $(e^{s}-e^{-s}) \div (e^{s}+e^{-s})$

Example

- When X0 = ON, the TANH value obtained from the designated binary floating point number (D1, D0) will be stored in (D11, D10), with the content consisting of a binary floating point number.

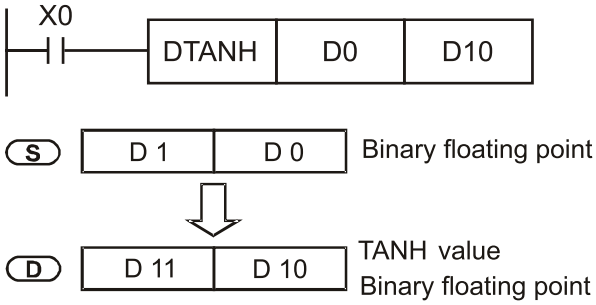

API 147	D	SWAP	P	S	Exchange the up/down 8 bits

	Bit device			Word device							
	X	Y	M	K	H	KnX	KnY	KnM	T	C	D
S						*	*	*	*	*	*

Notes on operand usage: none

16-bit command (3 STEP)

SWAP	Continuous execution type	SWAPP	Pulse execution type

32-bit command (5 STEP)

DSWAP	Continuous execution type	DSWAPP	Pulse execution type

Flag signal: none

Explanation

- **S**: The device that going to exchange its up/down 8 bits.
- When using 16-bit command, the upper 8-bit and lower 8-bit exchange.
- When using 32-bit command, the contents of upper 8-bit and lower 8-bit of the 2 registers exchange.
- This command usually uses pulse execution type (SWAPP, DSWAPP)

API 150	MODRW P	S1 S2 S3 S n	MODBUS data read/write

	Bit device			Word device							
	X	Y	M	K	H	KnX	KnY	KnM	T	C	D
S1				*	*						*
S2				*	*						*
S3				*	*						*
S											*
n				*	*						*

16-bit command (5 STEP)			
MODRW	Continuous execution type	MODRW P	Pulse execution type
32-bit command			
-	-	-	-

Flag signal: M1077 M1078 M1079

Explanation

- S1: online device address. S2: communications function code. S3: address of data to read / write. S: register for data to be read/written is stored. N: length of data to be read/written.
- COM1 must be defined as controlled by the PLC (set Pr.09-31 = -12) before using this command, and the corresponding communications speed and format must also be set (set Pr.09-01 and Pr.09-04). S2: communications function code. Currently only supports the following function code; the remaining function code cannot be executed.

Function	Description
H 02	Input read
H 03	Read word
H 06	Write single word
H 0F	Write multiple coils
H 10	Write single word

- After executing this command, M1077, M1078 and M1079 will be immediately changed to 0.
- As an example, when CH2000 must control another converter and PLC, if the converter has a station number of 10 and the PLC has a station number of 20, see the following example:

Control slave device converter

Serial No.	Example	MODRW command				
		S1	S2	S3	S4	n
		Node ID	Function Code	Address	Register	Length
1	Reads 4 sets of data comprising the converter slave device parameters Pr.01-00 to Pr.01-03, and saves the read data in D0 to D3	K10	H3	H100	D0	K4
2	Reads 3 sets of data comprising the converter slave device addresses H2100 to H2102, and saves the read data in D5 to D7	K10	H3	H2100	D5	K3
3	Writes 3 sets of data comprising the converter slave device parameters Pr.05-00 to Pr.05-03, and writes the values as D10 to D12	K10	H10	H500	D10	K3
4	Writes 2 sets of data comprising the converter slave device addresses H2000 to H2001, and writes the values as D15 to D16	K10	H10	H2000	D15	K2

PLC controlling slave device

Serial No.	Example	MODRW command				
		S1	S2	S3	S4	n
		Node ID	Function Code	Address	Register	Length
1	Reads 4 sets of data comprising the PLC slave device's X0 to X3 state, and saves the read data in bits 0 to 3 of D0	K20	H2	H400	D0	K4
2	Reads 4 sets of data comprising the PLC slave device's Y0 to Y3 state, and saves the read data in bits 0 to 3 of D1	K20	H2	H500	D1	K4
3	Reads 4 sets of data comprising the PLC slave device's M0 to M3 state, and saves the read data in bits 0 to 3 of D2	K20	H2	H800	D2	K4
4	Reads 4 sets of data comprising the PLC slave device's T0 to T3 state, and saves the read data in bits 0 to 3 of D3	K20	H2	H600	D3	K4
5	Reads 4 sets of data comprising the PLC slave device's C0 to C3 state, and saves the read data in bits 0 to 3 of D4	K20	H2	HE00	D4	K4
6	Reads 4 sets of data comprising the PLC slave device's T0 to T3 count value, and saves the read data of D10 to D13	K20	H3	H600	D10	K4
7	Reads 4 sets of data comprising the PLC slave device's C0 to C3 count value, and saves the read data of D20 to D23	K20	H3	HE00	D20	K4
8	Reads 4 sets of data comprising the PLC slave device's D0 to D3 count value, and saves the read data of D30 to D33	K20	H3	H1000	D30	K4
9	Writes 4 sets of the PLC slave device's Y0 to Y3 state, and writes the values as bits 0 to 3 of D1	K20	HF	H500	D1	K4
10	Writes 4 sets of the PLC slave device's M0 to M3 state, and writes the values as bits 0 to 3 of D2	K20	HF	H800	D2	K4
11	Writes 4 sets of the PLC slave device's T0 to T3 state, and writes the values as bits 0 to 3 of D3	K20	HF	H600	D3	K4
12	Writes 4 sets of the PLC slave device's C0 to C3 state, and writes the values as bits 0 to 3 of D4	K20	HF	HE00	D4	K4
13	Writes 4 sets of the PLC slave device's T0 to T3 state, and writes the values of D10 to D13	K20	H10	H600	D10	K4
14	Writes 4 sets of the PLC slave device's C0 to C3 state, and writes the values of D20 to D23	K20	H10	HE00	D20	K4
15	Writes 4 sets of the PLC slave device's D0 to D3 state, and writes the values of D30 to D33	K20	H10	H1000	D30	K4

Example

- Will trigger M0 ON when the PLC begins to operate, and sends instruction to execute one MODRW command.
- After receiving the slave device's response, if the command is correct, it will execute one ROL command, which will cause M1 to be ON.
- After receiving the slave device's response, will trigger M50 = 1 after a delay of 10 PLC scanning cycles, and then execute one MODRW command.
- After again receiving the slave device's response, if the command is correct, it will execute one ROL command, and M2 will change to On at this time (and M2 can be defined as a repeat of M); K4M0 will change to K1, and only M0 will remain 1. Transmission can proceed in a continuous cycle. If you wish to add a command, merely add the desired command in the empty frame, and change repeat M to Mn+1.

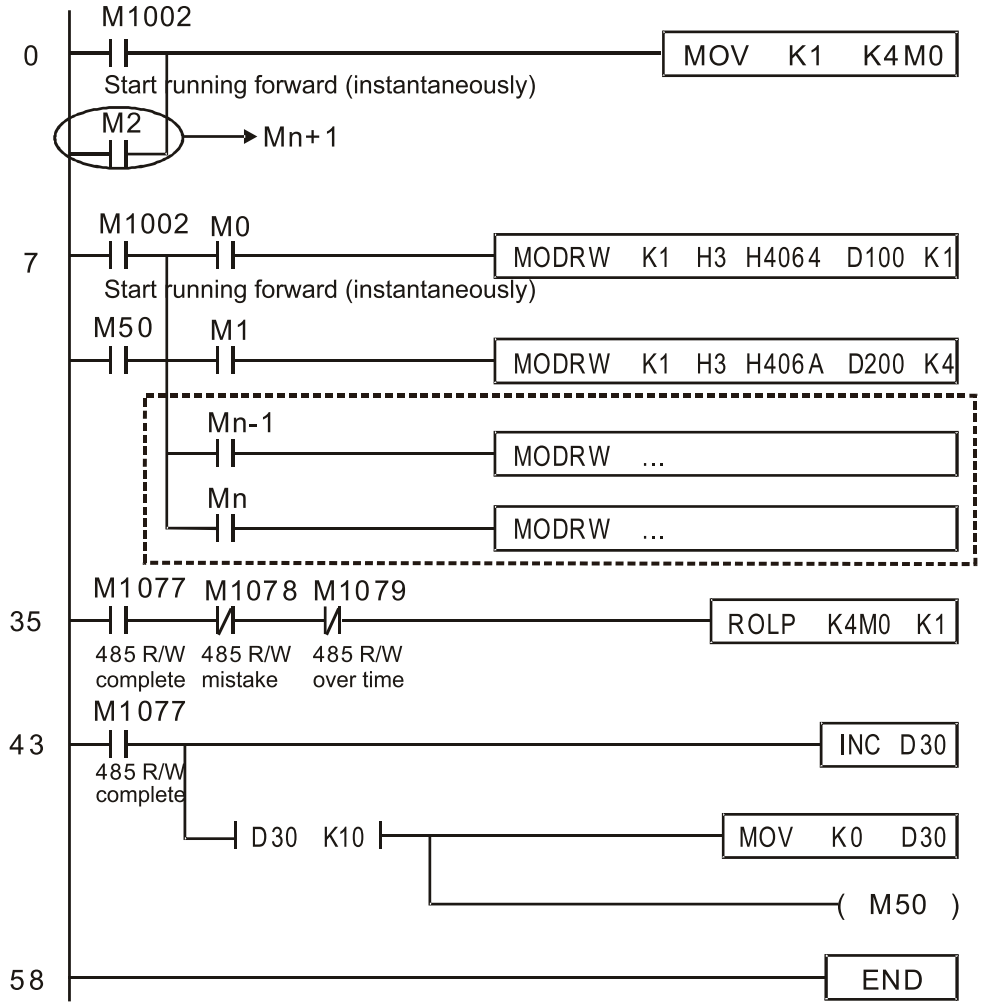

API 160	TCMP	P	S1 S2 S3 S n	Comparison of calendar data

	Bit device			Word device							
	X	Y	M	K	H	KnX	KnY	KnM	T	C	D
S1				*	*	*	*	*	*	*	*
S2				*	*	*	*	*	*	*	*
S3				*	*	*	*	*	*	*	*
S									*	*	*
D		*	*								

Notes on operand usage:
Please refer to the function specifications table for each device in series for the scope of device usage

16-bit command (11 STEP)

TCMP	Continuous execution type	TCMPP	Pulse execution type

32-bit command

-	-	-	-

Flag signal: none

Explanation

- **S_1**: Sets the hours of the comparison time, setting range is "K0–K23." **S_2**: Sets the minutes of the comparison time, setting range is "K0–K59." **S_3**: Sets the seconds of the comparison time, setting range is "K0–K59." **S**: current calendar time. **D**: Results of comparison.
- Compares the time in hours, minutes, and seconds set in **S_1–S_3** with the current calendar time in hours, minutes, and seconds, with the results of comparison expressed in **D**.
- **S** The hour content of the current calendar time is "K0–K23." **S** +1 comprises the minutes of the current calendar time, and consists of "K0–K59." **S** +2 comprises the seconds of the current calendar time, and consists of "K0–K59."
- The current calendar time designated by **S** is usually compared using the TCMP command after using the TRD command to read the current calendar time. If the content value of **S** exceeds the range, this is considered an operating error, the command will not execute, and M1068 = ON.

Example

- When X10 = ON, the command will execute, and the current calendar time in D20–D22 will be compared with the preset value of 12:20:45; the results will be displayed in M10–M12. When X10 ON→OFF, the command will not be executed, but the ON/OFF status prior to M10–M12 will be maintained.
- If results in the form of ≥, ≤, or ≠ are needed, they can be obtained by series and parallel connection of M10–M12.

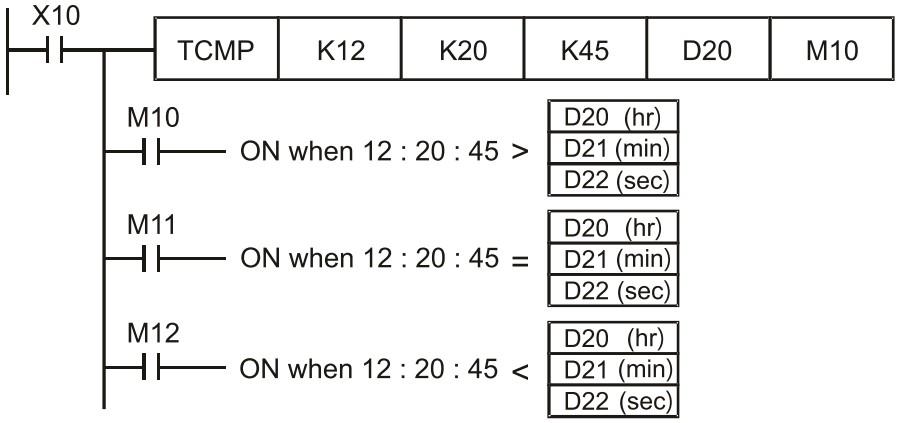

API 161	TZCP P	S1 S2 S D	Comparison of calendar data

	Bit device			Word device							
	X	Y	M	K	H	KnX	KnY	KnM	T	C	D
S1									*	*	*
S2									*	*	*
S									*	*	*
D		*	*								

Notes on operand usage:
Please refer to the function specifications table for each device in series for the scope of device usage

16-bit command (9 STEP)

TZCP	Continuous execution type	TZCPP	Pulse execution type

32-bit command

-	-	-	-

Flag signal: none

Explanation

- **S_1**: Sets the lower limit of the comparison time. **S_2**: Sets the upper limit of the comparison time. **S**: current calendar time. **D**: Results of comparison.
- Performs range comparison by comparing the hours, minutes, and seconds of the current calendar time designated by **S** with the lower limit of the comparison time set as **S_1** and the upper limit of the comparison time set as **S_2**, and expresses the results of comparison in **D**.
- **S_1**, **S_1** +1, **S_1** +2: Sets the hours, minutes, and seconds of the lower limit of the comparison time.
- **S_2**, **S_2** +1, **S_2** +2: Sets the hours, minutes, and seconds of the upper limit of the comparison time.
- **S**, **S** +1, **S** +2: The hours, minutes, and seconds of the current calendar time
- The D0 designated by the **S** listed in this program is usually obtained by comparison using the TZCP command after using the TRD command in advance to read the current calendar time. If the value of **S_1**, **S_2**, or **S** exceeds the range, this is considered an operating error, the command will not execute, and M1068=On.
- When the current time **S** is less than the lower limit value **S_1** and **S** is less than the upper limit value **S_2**, **D** will be On. When the current time **S** is greater than the lower limit value **S_1** and **S** is greater than the upper limit value **S_2**, **D** +2 will be On; **D** +1 will be On under other conditions.

Example

- When X10 = ON, the TZCP command executes, and one of M10–M12 will be ON. When X10 = OFF, the TZCP command will not execute, and M10–M12 will remain in the X10 = OFF state.

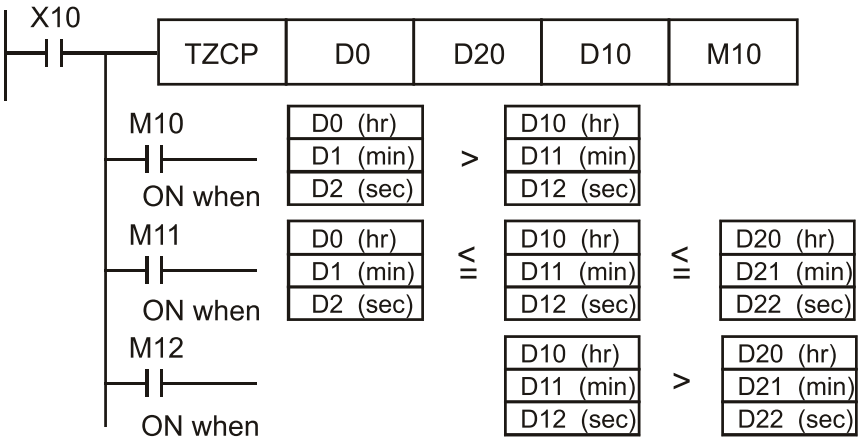

API 162	TADD P	(S1) (S2) (D)	Calendar data addition

	Bit device			Word device							
	X	Y	M	K	H	KnX	KnY	KnM	T	C	D
S1									*	*	*
S2									*	*	*
D									*	*	*

Notes on operand usage:
Please refer to the function specifications table for each device in series for the scope of device usage

16-bit command (7 STEP)

TADD	Continuous execution type	TADDP	Pulse execution type

32-bit command

-	-	-	-

- Flag signal: M1020 Zero flag
  M1022 Carry flag
  M1068 Calendar error

Explanation

- **S_1**: time addend. **S_2**: time augend. **D**: time sum.
- The calendar data in hours, minutes, and seconds designated by **S_2** is added to the calendar data in hours, minutes, and seconds designated by **S_1**, and the result is stored as hours, minutes, and seconds in the register designated by **D**.
- If the value of **S_1** or **S_2** exceeds the range, this is considered an operating error, the command will not execute, M1067, M1068 = ON, and D1067 will record the error code 0E1A(HEX).
- If the results of addition are greater than or equal to 24 hours, carry flag M1022 = ON, and **D** will display the results of addition minus 24 hours.
- If the results of addition are equal to 0 (0 hours, 0 minutes, 0 seconds), zero flag M1020 = ON.

Example

- When X10 = ON, the TADD command will be executed, and the calendar data in hours, minutes, and seconds designated by D0 to D2 will be added to the calendar data in hours, minutes, and seconds designated by D10 to D12, and the results are stored as a total number of hours, minutes, and seconds in the registers designated by D20 to D22.

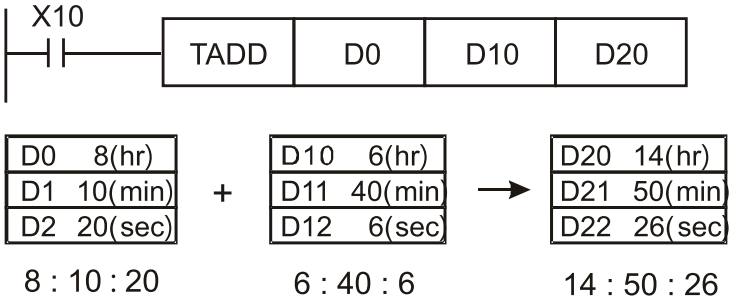

API 163	TSUB	P	S1 S2 D	Calendar data subtraction

	Bit device			Word device							
	X	Y	M	K	H	KnX	KnY	KnM	T	C	D
S1									*	*	*
S2									*	*	*
D									*	*	*

Notes on operand usage:
Please refer to the function specifications table for each device in series for the scope of device usage

16-bit command (7 STEP)

TSUB	Continuous execution type	TSUBP	Pulse execution type

32-bit command

-	-	-	-

- Flag signal: M1020 Zero flag
  M1022 Carry flag
  M1068 Calendar error

Explanation

- **S_1**: time minuend. **S_2**: time augend. **D**: time sum.
- Subtracts the calendar data in hours, minutes, and seconds designated by **S_2** from the calendar data in hours, minutes, and seconds designated by **S_1**, and the result is temporarily stored as hours, minutes, and seconds in the register designated by **D**.
- If the value of **S_1** or **S_2** exceeds the range, this is considered an operating error, the command will not execute, M1067, M1068 = ON, and D1067 will record the error code 0E1A(HEX).
- If subtraction results in a negative number, borrow flag M1021 = ON, and the result of that negative number plus 24 hours will be displayed in the register designated by **D**.
- If the results of subtraction are equal to 0 (0 hours, 0 minutes, 0 seconds), zero flag M1020 = ON.

Example

- When X10 = ON, the TADD command will be executed, and the calendar data in hours, minutes, and seconds designated by D10 to D12 will be subtracted from the calendar data in hours, minutes, and seconds designated by D0 to D2, and the results are stored as a total number of hours, minutes, and seconds in the registers designated by D20 to D22.

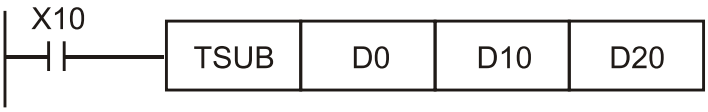

D0 20(hr)		D10 14(hr)		D20 5(hr)
D1 20(min)	–	D11 30(min)	→	D21 49(min)
D2 5(sec)		D12 8(sec)		D22 57(sec)
20 : 20 : 5		14 : 30 : 8		5 : 49 : 57

API 166		TRD	P	D	Calendar data read

	Bit device			Word device							
	X	Y	M	K	H	KnX	KnY	KnM	T	C	D
D									*	*	*

Notes on operand usage:
Please refer to the function specifications table for each device in series for the scope of device usage

16-bit command (3 STEP)			
TRD	Continuous execution type	TRDP	Pulse execution type

32-bit command			
-	-	-	-

- Flag signal: none

Explanation

- **S_1**: time minuend. **S_2**: time augend. **D**: time sum.
- **D**: device used to store the current calendar time after reading.
- The EH/EH2/SV/EH3/SV2/SA/SX/SC main units have a built-in calendar clock, and the clock provides seven sets of data comprising year, week, month, day, hour, minute, and second stored in D1063 to D1069. The TRD command function allows program designers to directly read the current calendar time into the designated seven registers.
- D1063 only reads the two right digits of the Western calendar year.

Example

- When X0 = ON, the current calendar time is read into the designated registers D0 to D6.
- In D1064, 1 indicates Monday, 2 indicates Tuesday, and so on, with and 7 indicating Sunday.

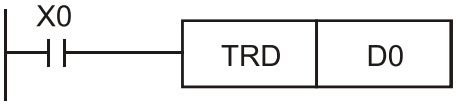

Special D	Item	Content		General D	Item
D1063	Year (Western)	00–99	→	D0	Year (Western)
D1064	Weeks	1–7	→	D1	Weeks
D1065	Month	1–12	→	D2	Month
D1066	Day	1–31	→	D3	Day
D1067	Hour	0–23	→	D4	Hour
D1068	Minute	0–59	→	D5	Minute
D1069	Second	0–59	→	D6	Second

API 170	D	GRY	P	S D	BIN→GRAY code transformation

	Bit device			Word device							
	X	Y	M	K	H	KnX	KnY	KnM	T	C	D
S				*	*	*	*	*	*	*	*
D							*	*	*	*	*

Notes on operand usage:
Please refer to the function specifications table for each device in series for the scope of device usage

16-bit command (5 STEP)			
GRY	Continuous execution type	GRYP	Pulse execution type

32-bit command (9 STEP)			
DGRY	Continuous execution type	DGRYP	Pulse execution type

- Flag signal: none

Explanation

- **S**: source device. **D**: device storing GRAY code.
- Transforms the content value (BIN value) of the device designated by **S** to GRAY code, which is stored in the device designated by **D**.
- The valid range of **S** is as shown below; if this range is exceeded, it will be considered an error, and the command will not execute.
- 16-bit command: 0–32,767
- 32-bit command: 0–2,147,483,647

Example

- When X0 = ON, the constant K6513 will be transformed to GRAY code and stored in D0.

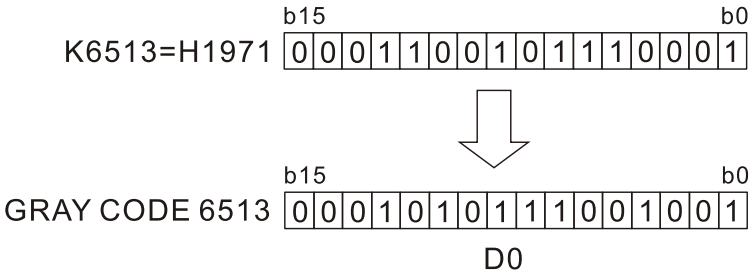

API 171	D	GBIN	P	S D	GRAY code →BIN transformation

	Bit device			Word device							
	X	Y	M	K	H	KnX	KnY	KnM	T	C	D
S				*	*	*	*	*	*	*	*
D							*	*	*	*	*

Notes on operand usage:
Please refer to the function specifications table for each device in series for the scope of device usage

16-bit command (5 STEP)

GBIN	Continuous execution type	GBINP	Pulse execution type

32-bit command (9 STEP)

DGBIN	Continuous execution type	DGBINP	Pulse execution type

- Flag signal: none

Explanation

- **S**: source device used to store GRAY code. **D**: device used to store BIN value after transformation.
- The GRAY code corresponding to the value of the device designated by **S** is transformed into a BIN value, which is stored in the device designated by **D**.
- This command will transform the value of the absolute position encoder connected with the PLC's input and (this encoder usually has an output value in the form of GRAY code) into a BIN value, which is stored in the designated register.
- The valid range of **S** is as shown below; if this range is exceeded, it will be considered an error, and the command will not execute.
- 16-bit command: 0–32,767
- 32-bit command: 0–2,147,483,647

Example

- When X20 = ON, the GRAY code of the absolute position encoder connected with input points X0 to X17 will be transformed into BIN value and stored in D10.

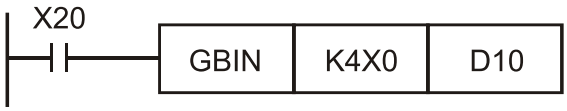

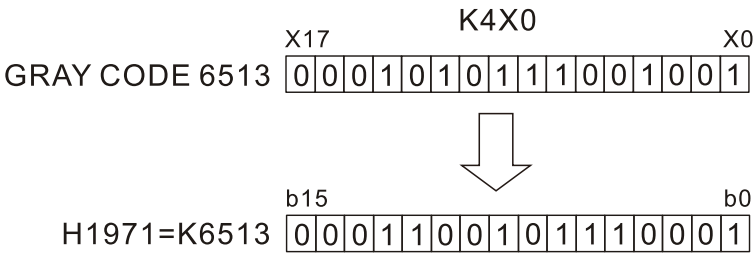

API 215–217	D	LD#		S1 S2	Contact form logical operation LD#

	Bit device			Word device							
	X	Y	M	K	H	KnX	KnY	KnM	T	C	D
S1				*	*	*	*	*	*	*	*
S2				*	*	*	*	*	*	*	*

Notes on operand usage: # : & 、| 、^
Please refer to the function specifications table for each device in series for the range of device usage

16-bit command (5 STEP)

LD#	Continuous execution type	-	-

32-bit command (9 STEP)

DLD#	Continuous execution type	-	-

Flag signal: none

Explanation

- **S_1**: data source device 1. **S_2**: data source device 2.
- This command performs comparison of the content of **S_1** and **S_2**; when the result of comparison is not 0, this command will be activated, but this command will not be activated when the result of comparison is 0.
- The LD#This command can be used while directly connected with the busbar

API No.	16-bit Commands	32-bit Commands	Conditions for Activation	Conditions for Inactivation
215	LD&	**D**LD&	S_1 & S_2 $\neq 0$	S_1 & S_2 $=0$
216	LD|	**D**LD|	S_1 | S_2 $\neq 0$	S_1 | S_2 $=0$
217	LD^	**D**LD^	S_1 ^ S_2 $\neq 0$	S_1 ^ S_2 $=0$

- &: logical AND operation.
- |: logical OR operation.
- ^: logical XOR operation.

Example

- When the content of C0 and C10 is subjected to the logical AND operation, and the result is not equal to 0, Y10 = ON.
- When the content of D200 and D300 is subjected to the logical OR operation, and the result is not equal to 0, and X1 = ON, Y11 = ON and remains in that state.

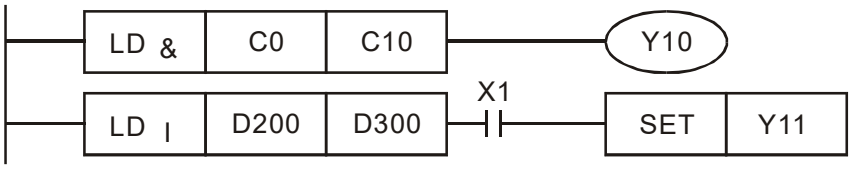

API 218–220	D	AND#		S1 S2	Contact form logical operation AND#

	Bit device			Word device							
	X	Y	M	K	H	KnX	KnY	KnM	T	C	D
S1				*	*	*	*	*	*	*	*
S2				*	*	*	*	*	*	*	*

Notes on operand usage: # : & 、| 、^
Please refer to the function specifications table for each device in series for the scope of device usage

16-bit command (5 STEP)

AND#	Continuous execution type	-	-

32-bit command (9 STEP)

DAND#	Continuous execution type	-	-

Flag signal: none

Explanation

- **S_1**: data source device 1. **S_2**: data source device 2.
- This command performs comparison of the content of **S_1** and **S_2**; when the result of comparison is not 0, this command will be activated, but this command will not be activated when the result of comparison is 0.
- The AND# command is an operation command in series with the contact.

API No.	16-bit Commands	32-bit Commands	Conditions for Activation	Conditions for Inactivation
218	AND&	**D**AND&	S_1 & S_2 ≠0	S_1 & S_2 =0
219	AND|	**D**AND|	S_1 | S_2 ≠0	S_1 | S_2 =0
220	AND^	**D**AND^	S_1 ^ S_2 ≠0	S_1 ^ S_2 =0

- &: logical AND operation.
- |: logical OR operation.
- ^: logical XOR operation.

Example

- When X0 = ON and the content of C0 and C10 is subjected to the logical AND operation, and the result is not equal to 0, Y10 = ON.
- When X1 = OFF and D10 and D0 is subjected to the logical OR operation, and the result is not equal to 0, Y11 = ON and remains in that state.
- When X2 = ON and the content of the 32-bit register D200 (D201) and 32-bit register D100 (D101) is subjected to the logical XOR operation, and the result is not equal to 0 or M3 = ON, M50 = ON.

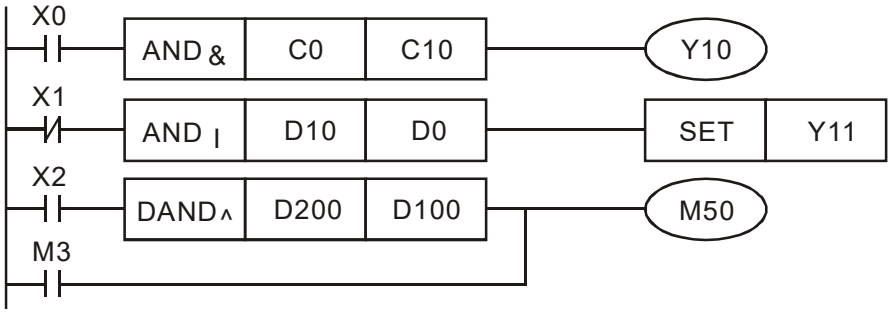

API 221–223	D	OR#		S1 S2	Contact form logical operation OR#

	Bit device			Word device							
	X	Y	M	K	H	KnX	KnY	KnM	T	C	D
S1				*	*	*	*	*	*	*	*
S2				*	*	*	*	*	*	*	*

Notes on operand usage: # : & 、| 、^
Please refer to the function specifications table for each device in series for the scope of device usage

16-bit command (5 STEP)

OR#	Continuous execution type	-	-

32-bit command (9 STEP)

DOR#	Continuous execution type	-	-

Flag signal: none

Explanation

- **S_1**: data source device 1. **S_2**: data source device 2.
- This command performs comparison of the content of **S_1** and **S_2**; when the result of comparison is not 0, this command will be activated, but this command will not be activated when the result of comparison is 0.
- The OR# command is an operation command in series with the contact.

API No.	16-bit Commands	32-bit Commands	Conditions for Activation	Conditions for Inactivation
221	OR&	**D**OR&	S_1 & S_2 $\neq 0$	S_1 & S_2 $=0$
222	OR|	**D**OR|	S_1 | S_2 $\neq 0$	S_1 | S_2 $=0$
223	OR^	**D**OR^	S_1 ^ S_2 $\neq 0$	S_1 ^ S_2 $=0$

- &: logical AND operation.
- |: logical OR operation.
- ^: logical XOR operation.

Example

- When X1 = ON or the content of C0 and C10 is subjected to the logical AND operation, and the result is not equal to 0, Y0=On.
- When X2 and M30 are both equal to ON, or the content of 32-bit register D10 (D11) and 32-bit register D20 (D21) is subjected to the logical OR operation, and the result is not equal to 0, or the content of the 32-bit counter C235 and the 32-bit register D200 (D201) is subjected to the logical XOR operation, and the result is not equal to 0, M60 = ON.

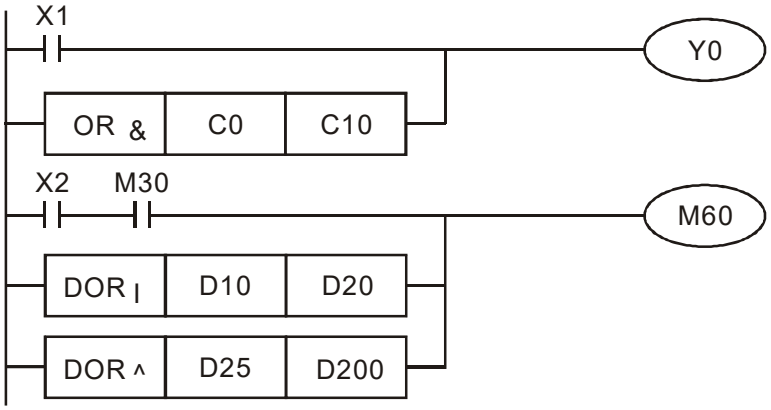

API 224–230	D	LD※		S1 S2	Contact form compare LD*

	Bit device			Word device							
	X	Y	M	K	H	KnX	KnY	KnM	T	C	D
S1				*	*	*	*	*	*	*	*
S2				*	*	*	*	*	*	*	*

Notes on operand usage: ※ : = 、 > 、 < 、 <> 、 ≤ 、 ≥

Please refer to the function specifications table for each device in series for the scope of device usage

16-bit command (5 STEP)

LD※	Continuous execution type	-	-

32-bit command (9 STEP)

DLD※	Continuous execution type	-	-

Flag signal: none

Explanation

- **S_1**: data source device 1. **S_2**: data source device 2.
- This command compares the content of **S_1** and **S_2**. Taking API 224 (LD=) as an example, this command will be activated when the result of comparison is "equal," and will not be activated when the result is "unequal."
- The LD* can be used while directly connected with the busbar

API No.	16-bit Commands	32-bit Commands	Conditions for Activation	Conditions for Inactivation
224	LD =	**D**LD＝	**$S_1 = S_2$**	**$S_1 \neq S_2$**
225	LD >	**D**LD >	**$S_1 > S_2$**	**$S_1 \leq S_2$**
226	LD <	**D**LD <	**$S_1 < S_2$**	**$S_1 \geq S_2$**
228	LD < >	**D**LD < >	**$S_1 \neq S_2$**	**$S_1 = S_2$**
229	LD < =	**D**LD < =	**$S_1 \leq S_2$**	**$S_1 > S_2$**
230	LD＞＝	**D**LD > =	**$S_1 \geq S_2$**	**$S_1 < S_2$**

Example

- When the content of C10 is equal to K200, Y10 = ON.
- When the content of D200 is greater than K-30, and X1 = ON, Y11 = ON and remains in that state.

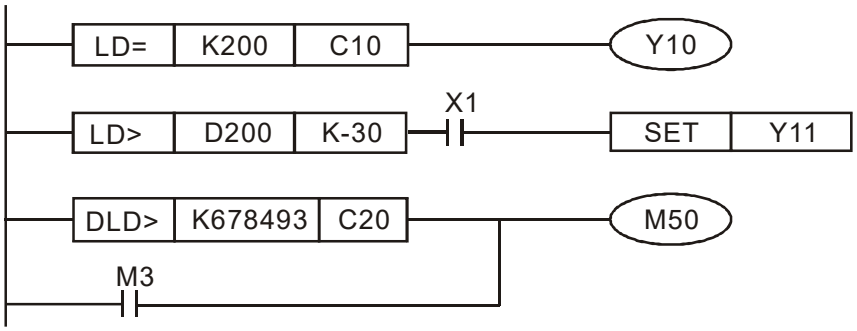

API 232–238	D	AND※		S1 S2	Contact form compare AND*

	Bit device			Word device							
	X	Y	M	K	H	KnX	KnY	KnM	T	C	D
S1				*	*	*	*	*	*	*	*
S2				*	*	*	*	*	*	*	*

Notes on operand usage: ※ : = 、 > 、 < 、 <> 、 ≤ 、 ≥

Please refer to the function specifications table for each device in series for the scope of device usage

16-bit command (5 STEP)

AND※	Continuous execution type	-	-

32-bit command (9 STEP)

DAND※	Continuous execution type	-	-

Flag signal: none

Explanation

- **S_1**: data source device 1. **S_2**: data source device 2.
- This command compares the content of **S_1** and **S_2**. Taking API 232 (AND=) as an example, when the result of comparison is equal, this command will be activated; when the result of comparison is unequal, this command will not be activated.
- The AND* command is a comparison command in series with a contact.

API No.	16-bit Commands	32-bit Commands	Conditions for Activation	Conditions for Inactivation
232	AND =	**D**AND＝	**$S_1 = S_2$**	**$S_1 \neq S_2$**
233	AND >	**D**AND >	**$S_1 > S_2$**	**$S_1 \leq S_2$**
234	AND <	**D**AND <	**$S_1 < S_2$**	**$S_1 \geq S_2$**
236	AND < >	**D**AND < >	**$S_1 \neq S_2$**	**$S_1 = S_2$**
237	AND < =	**D**AND < =	**$S_1 \leq S_2$**	**$S_1 > S_2$**
238	AND＞＝	**D**AND > =	**$S_1 \geq S_2$**	**$S_1 < S_2$**

Example

- When X0 = ON and the current value of C10 is also equal to K200, Y10 = ON.
- When X1 = OFF and the content of register D0 is not equal to K-10, Y11 = ON and remains in that state.
- When X2 = ON and the content of the 32-bit register D0 (D11) is less than 678,493, or M3 = ON, M50 = ON.

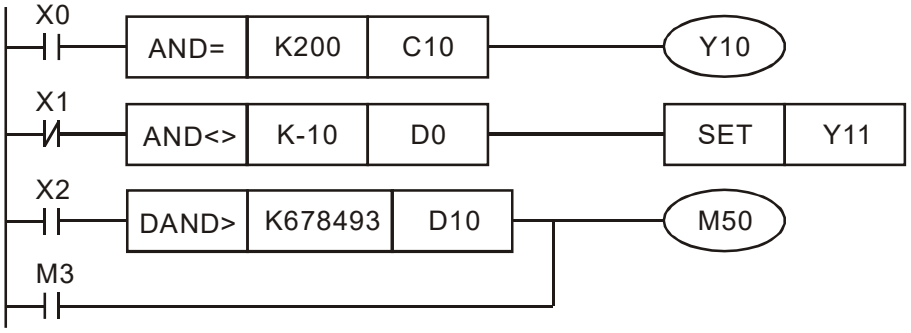

API 240–246	D	OR※		S1 S2	Contact form compare OR*

	Bit device			Word device							
	X	Y	M	K	H	KnX	KnY	KnM	T	C	D
S1				*	*	*	*	*	*	*	*
S2				*	*	*	*	*	*	*	*

Notes on operand usage: ※ : = 、 > 、 < 、 <> 、 ≦ 、 ≧

Please refer to the function specifications table for each device in series for the scope of device usage

16-bit command (5 STEP)

OR※	Continuous execution type	-	-

32-bit command (9 STEP)

DOR※	Continuous execution type	-	-

Flag signal: none

Explanation

- **S_1**: data source device 1. **S_2**: data source device 2.
- This command compares the content of **S_1** and **S_2**. Taking API 240 (OR=) as an example, when the result of comparison is equal, this command will be activated; when the result of comparison is unequal, this command will not be activated.
- The OR* command is a compare command in parallel with a contact.

API No.	16-bit Commands	32-bit Commands	Conditions for Activation	Conditions for Inactivation
240	OR =	**D**OR＝	**$S_1 = S_2$**	**$S_1 \neq S_2$**
241	OR >	**D**OR >	**$S_1 > S_2$**	**$S_1 \leq S_2$**
242	OR <	**D**OR <	**$S_1 < S_2$**	**$S_1 \geq S_2$**
244	OR < >	**D**OR < >	**$S_1 \neq S_2$**	**$S_1 = S_2$**
245	OR < =	**D**OR < =	**$S_1 \leq S_2$**	**$S_1 > S_2$**
246	OR＞＝	**D**OR > =	**$S_1 \geq S_2$**	**$S_1 < S_2$**

Example

- When X0 = ON and the current value of C10 is also equal to K200, Y10 = ON.
- When X1 = OFF and the content of register D0 is not equal to K-10, Y11 = ON and remains in that state.
- When X2 = ON and the content of the 32-bit register D0 (D11) is less than 678,493, or M3 = ON, M50 = ON.

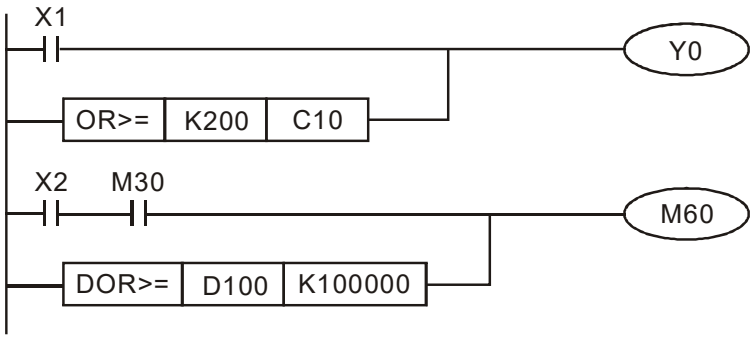

API 275–280	FLD※	(S1) (S2)	Floating point number contact form compare LD*

	Bit device			Word device							
	X	Y	M	K	H	KnX	KnY	KnM	T	C	D
S1									*	*	*
S2									*	*	*

Notes on operand usage: # : & 、| 、^

Please refer to the function specifications table for each device in series for the scope of device usage

16-bit command			
-	-	-	-

32-bit command (9 STEP)			
FLD※	Continuous execution type	-	-

Flag signal: none

Explanation

- **S_1**: data source device 1. **S_2**: data source device 2.
- This command compares the content of **S_1** and **S_2**. Taking "FLD=" as an example, if the result of comparison is "equal," this command will be activated; but it will not be activated when the result is "unequal."
- The FLD* command can directly input floating point numerical values (for instance: F1.2) to the **S_1**, **S_2** operands, or store floating-point numbers in register D for use in operations.
- This command can be used while directly connected with the busbar

API No.	32-bit Commands	Conditions for Activation	Conditions for Inactivation
275	FLD＝	**$S_1 = S_2$**	**$S_1 \neq S_2$**
276	FLD >	**$S_1 > S_2$**	**$S_1 \leq S_2$**
277	FLD <	**$S_1 < S_2$**	**$S_1 \geq S_2$**
278	FLD < >	**$S_1 \neq S_2$**	**$S_1 = S_2$**
279	FLD < =	**$S_1 \leq S_2$**	**$S_1 > S_2$**
280	FLD > =	**$S_1 \geq S_2$**	**$S_1 < S_2$**

Example

- When the floating point number of register D200 (D201) is less than or equal to F1.2, and X1 activated, contact Y21 will be activated and remain in that state.

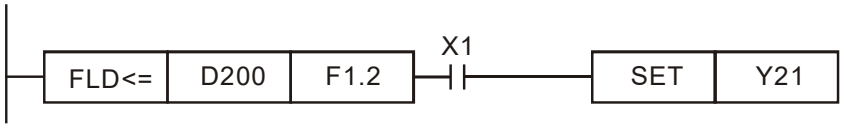

API 281–286		FAND※		(S1) (S2)	Floating point number contact form compare AND*

	Bit device			Word device							
	X	Y	M	K	H	KnX	KnY	KnM	T	C	D
S1									*	*	*
S2									*	*	*

Notes on operand usage: # : & 、| 、^
Please refer to the function specifications table for each device in series for the scope of device usage

16-bit command

-	-	-	-

32-bit command (9 STEP)

FAND※	Continuous execution type	-	-

Flag signal: none

Explanation

- **S_1**: data source device 1. **S_2**: data source device 2.
- This command compares the content of **S_1** and **S_2**. Taking "FAND=" as an example, if the result of comparison is "equal," this command will be activated; but it will not be activated when the result is "unequal."
- The FAND* command can directly input floating point numerical values (for instance: F1.2) to the **S_1**, **S_2** operands, or store floating-point numbers in register D for use in operations.
- This command can be used while directly connected with the busbar

API No.	32-bit Commands	Conditions for Activation	Conditions for Inactivation
281	FAND=	**$S_1 = S_2$**	**$S_1 \neq S_2$**
282	FAND >	**$S_1 > S_2$**	**$S_1 \leq S_2$**
283	FAND <	**$S_1 < S_2$**	**$S_1 \geq S_2$**
284	FAND < >	**$S_1 \neq S_2$**	**$S_1 = S_2$**
285	FAND < =	**$S_1 \leq S_2$**	**$S_1 > S_2$**
286	FAND > =	**$S_1 \geq S_2$**	**$S_1 < S_2$**

Example

- When X1 = OFF, and the floating point number in register D100 (D101) is not equal to F1.2, Y21 = ON and remains in that state.

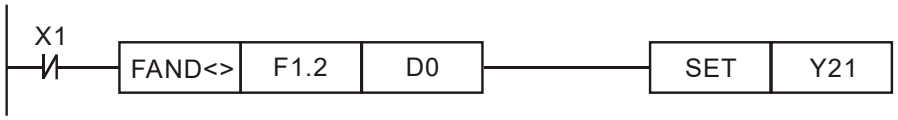

API 287–292	FOR※	(S1) (S2)	Floating point number contact form compare OR*

	Bit device			Word device							
	X	Y	M	K	H	KnX	KnY	KnM	T	C	D
S1									*	*	*
S2									*	*	*

Notes on operand usage: # : & 、| 、^
Please refer to the function specifications table for each device in series for the scope of device usage

16-bit command			
-	-	-	-

32-bit command (9 STEP)			
FOR※	Continuous execution type	-	-

Flag signal: none

Explanation

- **S_1**: data source device 1. **S_2**: data source device 2.
- This command compares the content of **S_1** and **S_2**. Taking "FOR=" as an example, if the result of comparison is "equal," this command will be activated; but it will not be activated when the result is "unequal."
- The FOR* command can directly input floating point numerical values (for instance: F1.2) to the **S_1**, **S_2** operands, or store floating-point numbers in register D for use in operations.
- This command can be used while directly connected with the busbar

API No.	32-bit Commands	Conditions for Activation	Conditions for Inactivation
287	FOR＝	**$S_1 = S_2$**	**$S_1 \neq S_2$**
288	FOR >	**$S_1 > S_2$**	**$S_1 \leq S_2$**
289	FOR <	**$S_1 < S_2$**	**$S_1 \geq S_2$**
290	FOR < >	**$S_1 \neq S_2$**	**$S_1 = S_2$**
291	FOR < =	**$S_1 \leq S_2$**	**$S_1 > S_2$**
292	FOR > =	**$S_1 \geq S_2$**	**$S_1 < S_2$**

Example

- When X2 and M30 are both equal to "ON," or the floating point number in register D100 (D101) is greater than or equal to F1.234, M60 = ON.

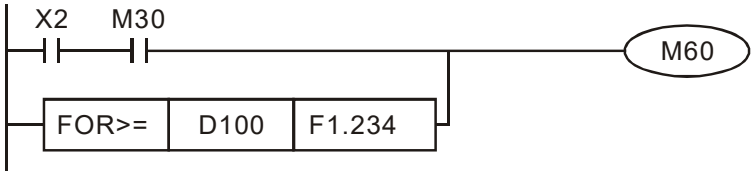

16-6-5 Detailed explanation of drive special applications commands

API 139	RPR	P	S1 S2	Read servo parameter

	Bit device			Word device							
	X	Y	M	K	H	KnX	KnY	KnM	T	C	D
S1				*	*						*
S2											*

Notes on operand usage: none

16-bit command (5 STEP)			
RPR	Continuous execution type	RPRP	Pulse execution type
32-bit command			
-	-	-	-

Flag signal: none

Explanation

- **S1**: Parameter address of data to be read. **S2**: Register where data to be read is stored.

API 140	WPR	P	S1 S2	Write servo parameter

	Bit device			Word device							
	X	Y	M	K	H	KnX	KnY	KnM	T	C	D
S1				*	*						*
S2				*	*						*

Notes on operand usage: none

16-bit command (5 STEP)			
WPR	Continuous execution type	WPRP	Pulse execution type
32-bit command			
-	-	-	-

Flag signal: none

Explanation

- **S1**: Data to write to specified page. **S2**: Parameter address of data to be written.

Example

- When the data in the CH2000 drive's parameter H01.00 is read and written to D0, data from H01.01 will be read and written to D1.
- When M0 = ON, the content of D10 will be written to the CH2000 drive parameter 04.00 (first speed of multiple speed levels).
- When the parameter has been written successfully, M1017 = ON.
- The CH2000's WPR command does not support writing to the 20XX address, but the RPR command supports reading of 21XX, 22XX.

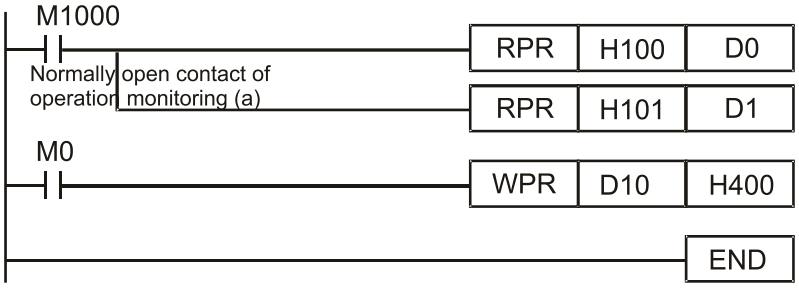

Recommendation

Take care when using the WPR command. When writing parameters, because most parameters are recorded as they are written, these parameters may only be revised 109 times; a memory write error may occur if parameters are written more than 10^9 times.

Because the following commonly-used parameters have special processing, there are **no** restrictions on the number of times they may be written.

Pr.00-10: Control method

Pr.00-11: Speed mode selection

Pr.00-12: P2P position mode

Pr.00-13: Torque mode select

Pr.00-27: User-defined value

Pr.01-12: Acceleration time 1

Pr.01-13: Deceleration time 1

Pr.01-14: Acceleration time 2

Pr.01-15: Deceleration time 2

Pr.01-16: Acceleration time 3

Pr.01-17: Deceleration time 3

Pr.01-18: Acceleration time 4

Pr.01-19: Deceleration time 4

Pr.02-12: Select MI Conversion Time mode:

Pr.02-18: Select MO Conversion Time mode:

Pr.04-50–Pr.04-69: PLC register parameter 0 - 19

Pr.08-04: Upper limit of integral

Pr.08-05: PID output upper limit

Pr.10-17: Electronic gear A

Pr.10-18: Electronic gear B

Pr.11-34: Torque command

Pr.11-43: P2P highest frequency

Pr.11-44: Position control acceleration time

Pr.11-45: Position control deceleration time

Calculation of the number of times written is based on whether the written value is modified. For instance, writing the same value 100 times at the same time counts as writing only once.

When writing a PLC program, if unsure of usage of the WPR command, we recommend that you use the WPRP command.

API 141	FPID	P	S1 S2 S3 S4	Drive PID control mode

	Bit device			Word device							
	X	Y	M	K	H	KnX	KnY	KnM	T	C	D
S1				*	*						*
S2				*	*						*
S3				*	*						*
S4				*	*						*

Notes on operand usage: none

16-bit command (9 STEP)			
FPID	Continuous execution type	FPIDP	Pulse execution type

32-bit command			
-	-	-	-

Flag signal: none

Explanation

- **S1**: Terminal selection of PID feedback. **S2**: PID function proportional gain P. **S3**: PID function integral time I. **S4**: PID function differential time D.
- The FPID command can directly control the drive's feedback control of PID Pr.08-00 Terminal selection of PID feedback, Pr.08-01 proposal gain P, Pr.08-02 integral time I, and Pr.08-03 differential time D.

Example

- When M0 = ON, the set terminal selection of PID feedback is 0 (no PID function), the PID function proportional gain P is 0, the PID function integral time I is 1 (units: 0.01 sec.), and the PID function differential time D is 1 (units: 0.01 sec.).
- When M1 = ON, the set terminal selection of PID feedback is 0 (no PID function), the PID function proportional gain P is 1 (units: 0.01), the PID function integral time I is 0, and the PID function differential time D is 0.
- When M2 = ON, the set terminal selection of PID feedback is 1 (negative feedback through analog input Pr.03-00–03-02), the PID function proportional gain P is 1 (units: 0.01), the PID function integral time I is 0, and the PID function differential time D is 0.
- D1027: Frequency command after PID operation.

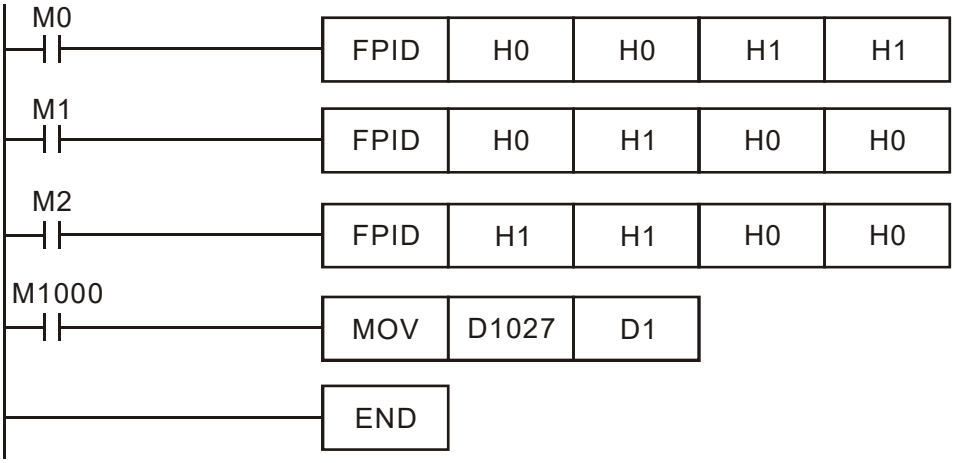

API 142	FREQ P	S1 S2 S3	Drive speed control mode

	Bit device			Word device							
	X	Y	M	K	H	KnX	KnY	KnM	T	C	D
S1				*	*						*
S2				*	*						*
S3				*	*						*

Notes on operand usage: none

16-bit command (7 STEP)

FREQ	Continuous execution type	FREQP	Pulse execution type

32-bit command

-	-	-	-

Flag signal: M1015

Explanation

- **S1**: Frequency command. **S2**: Acceleration time. **S3**: Deceleration time
- S2,S3: In acceleration/deceleration time settings, the number of decimal places is determined by the definitions of Pr.01-45.
- Example

  When Pr.01-45 = 0: units of 0.01 sec.

  The setting of 50 for S2 (acceleration time) in the ladder diagram below implies 0.5 sec., and the S3 (deceleration time) setting of 60 implies 0.6 sec.

  The FREQ command can control drive frequency commands, and acceleration and deceleration time; it also uses special register control actions, such as:

  M1025: Control drive RUN (ON) / STOP (OFF) (RUN requires Servo ON (M1040 ON) to be effective)

  M1026: Control drive operating direction FWD (OFF) / REV (ON)

  M1040: Control Servo ON / Servo OFF.

  M1042: Trigger quick stop (ON) / does not trigger quick stop (OFF).

  M1044: Pause (ON) / release pause (OFF)

  M1052: Lock frequency (ON) / release lock frequency (OFF)

Example

- M1025: Drive RUN (ON) / STOP (OFF), M1026: drive operating direction FWD (OFF) / REV (ON). M1015: frequency reached.
- When M10 = ON, sets the drive frequency command K300 (3.00 Hz), with an acceleration / deceleration time of 0.
- When M11 = ON, sets the drive frequency command K3000 (30.00 Hz), with an acceleration time of 50 (0.5 sec.) and deceleration time of 60 (0.6 sec.). (When Pr.01-45 = 0)
- When M11 = OFF, the drive frequency command will now change to 0

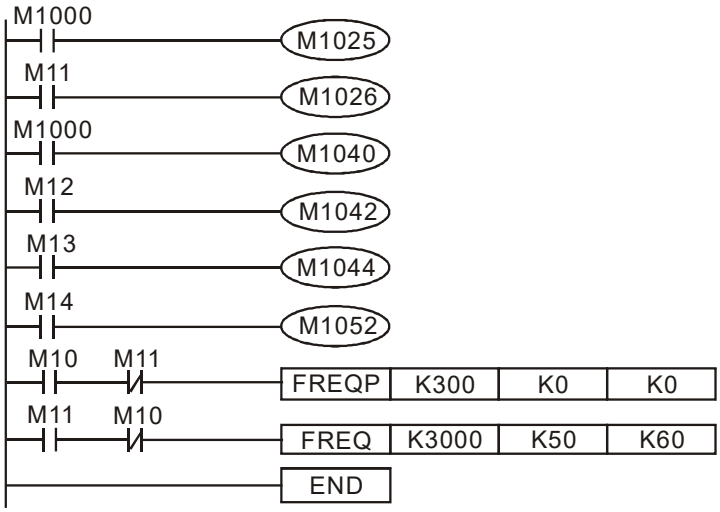

- Pr.09-33 are defined on the basis of whether reference commands have been cleared before PLC operation.

  bit0: Prior to PLC scanning procedures, whether the target frequency has been cleared is 0. (This will be written to the FREQ command when the PLC is ON)

  bit1: Prior to PLC scanning procedures, whether the target torque has been cleared is 0. (This will be written to the TORQ command when the PLC is ON)

  bit2: Prior to PLC scanning procedures, whether speed limits in the torque mode have been cleared is 0. (This will be written to the TORQ command when the PLC is ON)

  Example: When using r to write a program

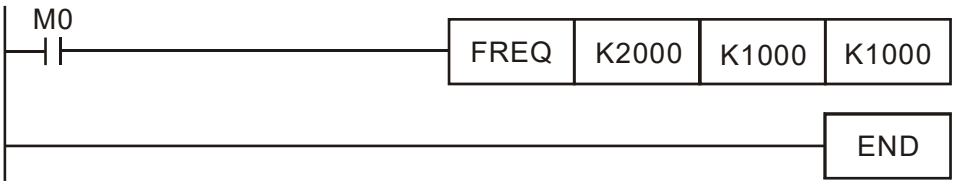

  If we force M0 to be 1, the frequency command will be 20.00 Hz; but when M0 is set as 0, there will be a different situation.

  Case 1: When the Pr.09-33 bit 0 is 0, and M0 is set as 0, the frequency command will remain at 20.00 Hz.

  Case 2: When the Pr.09-33 bit 0 is 1, and M0 is set as 0, the frequency command will change to 0.00 Hz.

  The reason for this is that when the Pr.09-33 bit 0 is 1 prior to PLC scanning procedures, the frequency will first revert to 0.

  When the Pr.09-33 bit 0 is 0, the frequency will not revert to 0.

API 263	TORQ P	(S1) (S2)	Drive torque control mode

	Bit device			Word device							
	X	Y	M	K	H	KnX	KnY	KnM	T	C	D
S1				*	*						*
S2				*	*						*

Notes on operand usage: none

16-bit command (5 STEP)

TORQ	Continuous execution type	TORQ P	Pulse execution type

32-bit command

-	-	-	-

Flag signal: M1063

Explanation

- **S1**: Torque command (numbered, no more than one digit). **S2**: Speed limit.
- The TORQ command can control the drive torque command and speed limits; it also uses special register control actions, such as:
- M1040: Controls Servo ON / Servo OFF. When Servo is ON, if a TORQ command is executed, the torque will output the torque defined by the TORQ command, and the frequency restrictions will similarly be controlled by the TORQ command.

Example

- M1040: Control Servo ON / Servo OFF. M1063: set torque attained. D1060 is the mode controls. D1053 is the actual torque.
- When M0 = OFF, set the drive torque command K+500 (+50.0%), rotational speed restrictions is 3000 (30 Hz).
- When M0 = ON, sets the drive torque command K-300 (-30.0%), rotational speed restrictions is 3000 (30 Hz).
- When M10 = ON, drive began output torque command.
- When set torque is attained, M1063 will go ON; this flag usually jumps continuously, however.

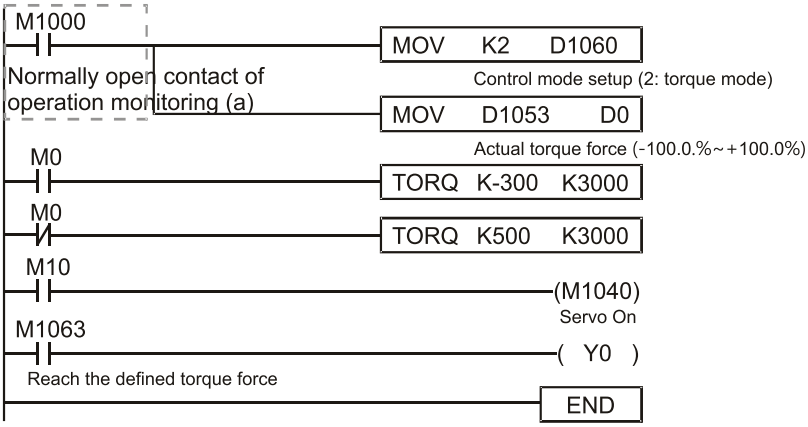

- Pr.09-33 are defined on the basis of whether reference commands have been cleared before PLC operation.
  bit0: Prior to PLC scanning procedures, whether the target frequency has been cleared is 0. (This will be written to the FREQ command when the PLC is ON)
  bit1: Prior to PLC scanning procedures, whether the target torque has been cleared is 0. (This will be written to the TORQ command when the PLC is ON)
  bit2: Prior to PLC scanning procedures, whether speed limits in the torque mode have been cleared is 0. (This will be written to the TORQ command when the PLC is ON)

  Example:

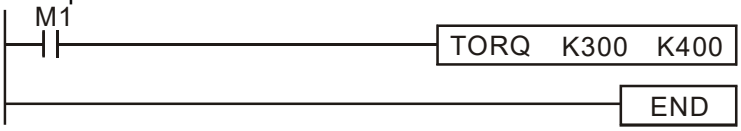

  If we now force M1 to be 1, the torque command will be K+300 (+30%), and the speed limit will be 400 (40 Hz). But when M1 is set as 0, there will be a different situation.
  Case 1: When bit 1 and bit 2 of Pr.09-33 are both set as 0, and M1 is set as 0, the torque command will remain at +30%, and the speed limit will be set as 40 Hz.
  Case 2: When bit 2 of Pr.09-33 are both 1, and M1 is set as 0, the torque command will revert 0%, and the speed limit will be set as 0Hz.

API 262		DPOS	P	S1	Drive point-to-point control

	Bit device			Word device							
	X	Y	M	K	H	KnX	KnY	KnM	T	C	D
				*	*						*

Notes on operand usage: none

16-bit command			
-	-	-	-

32-bit command (5 STEP)			
DPOS	Continuous execution type	DPOSP	Pulse execution type

Flag signal: M1064, M1070

Explanation

- **S1**: Target (must have a number).
- The DPOS command can control the drive's position commands, and employs special register control actions, such as:
- M1040: Control Servo ON /Servo OFF. M1055 search for origin. M1048 move to new position. If the control mode is position mode (D1060 = 1), and the converter is in the Servo ON state (M1040 = 1), if the DPOS command is executed, the drive will move to a new position in conjunction with activation of M1048 once (OFF to ON).

Example

- M1040: Control Servo ON / Servo OFF. M1064: set position attained. D1060 is the mode control. D1051(L) and D1052(H) are the actual position points.
- When X0 = ON, M1040 will be On (Servo ON).
- When X1 = ON, sets DPOS position as +300000, and M1048 will change to ON (move to new position) after a delay of 1 sec. Check whether the value of D1051 has changed at this time; after the set position point has been reached, M1064 will go ON, and Y0 will output ON.

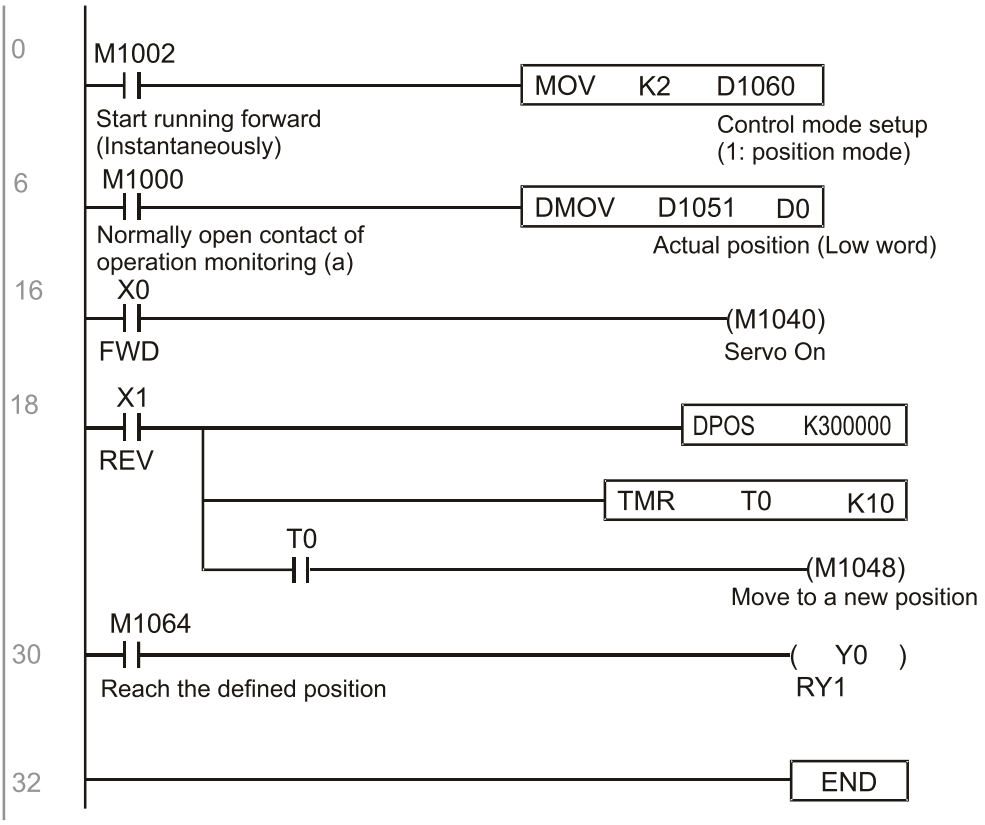

API 261	CANRX P	S1 S2 S3 D	Read CANopen slave station data

	Bit device			Word device							
	X	Y	M	K	H	KnX	KnY	KnM	T	C	D
S1				*	*						
S2				*	*						
S3				*	*						
D									*	*	*

Notes on operand usage: none

16-bit command (9 STEP)			
CANRX	Continuous execution type	CANRX P	Pulse execution type

32-bit command			
-	-	-	-

Flag signal

Explanation

- **S1**: Slave station number. **S2**: Main index. **S3**: Subindex+bit length. **D**: Preset address.
- The CANRX command can read the index of the corresponding slave station. When it is executed, it will send the SDO message format to the slave station. M1066 and M1067 will both be 0 at that time, and M1066 will be set as 1 after reading. If the slave station gives the correct response, it will write the value to the preset register, and set M1067 as 1. If the slave station has a response error, M1067 will be set as 0, and an error message will be recorded to D1076 to D1079.

Example

M1002: When the PLC runs, the command will be triggered once and will set K4M400 = K1

Afterwards, each time M1066 is 1, it will switch to a different message.

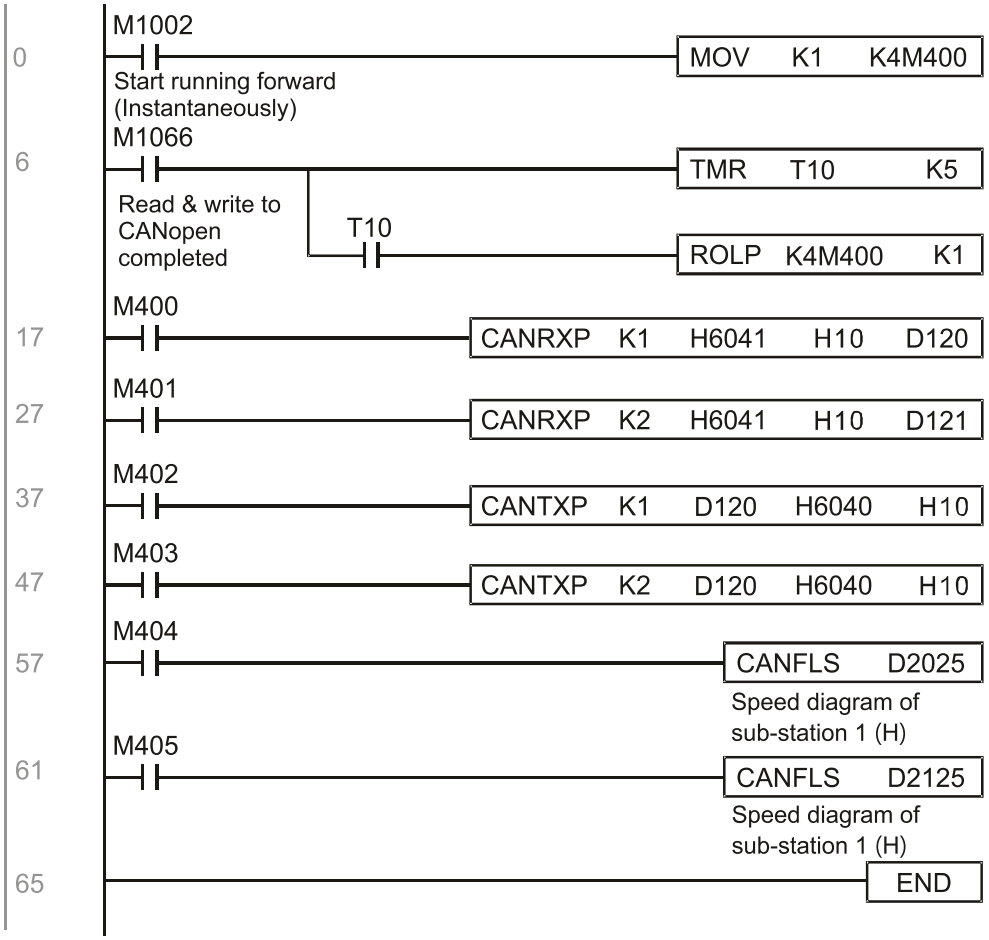

API 264	CANTX	P	S1 S2 S3 S4	Write CANopen slave station data

	Bit device			Word device							
	X	Y	M	K	H	KnX	KnY	KnM	T	C	D
S1				*	*						
S2				*	*				*	*	*
S3				*	*						
S4				*	*						

Notes on operand usage: none

16-bit command (9 STEP)			
CANTX	Continuous execution type	CANTXP	Pulse execution type
32-bit command			
-	-	-	-

Flag signal

Explanation

- **S1**: Slave station number. **S2**: Address to be written. **S3**: Main index. **S4**: Subindex+bit length.
- The CANTX command can write a value to the index of the corresponding slave station. When it is executed, it will send the SDO message format to the slave station. M1066 and M1067 will both be 0 at that time, and M1066 will be set as 1 after reading. If the slave station gives the correct response, it will write the value to the preset register, and set M1067 as 1. If the slave station has a response error, M1067 will be set as 0, and an error message will be recorded to D1076 to D1079.

API 265		CANFLS	P	D	Refresh special D corresponding to CANopen

	Bit device			Word device							
	X	Y	M	K	H	KnX	KnY	KnM	T	C	D
D				*	*						

Notes on operand usage: none

16-bit command (3 STEP)

CANFLS	Continuous execution type	CANFLSP	Pulse execution type

32-bit command

-	-	-	-

Flag signal

Explanation

- **D**: Special D to be refreshed.
- The CANFLS command can refresh special D commands. When is a read only attribute, executing this command will send a message equivalent to that of CANRX to the slave station, and the number of the slave station will be transmitted back and refreshed to this special D. When there is a read/write attribute, executing this command will send a message equivalent to that of CANTX to the slave station, and the value of this special D will be written to the corresponding slave station.
- When M1066 and M1067 are both 0, and M1066 is set as 1 after reading, if the slave station gives a correct response, the value will be written to the designated register, and M1067 will be set as 1. If the slave station's response contains an error, then M1067 will be set as 0, and an error message will be recorded to D1076–D1079.

API 320	D	ICOMR	P	S1 S2 S3 D	Internal communications read

	Bit device			Word device							
	X	Y	M	K	H	KnX	KnY	KnM	T	C	D
S1				*	*						*
S2				*	*						*
S3				*	*						*
D				*	*						*

Notes on operand usage: none

16-bit command (9 STEP)

ICOMR	Continuous execution type	ICOMRP	Pulse execution type

32-bit command (17 STEP)

DICOMR	Continuous execution type	DICOMRP	Pulse execution type

Flag signal: M1077 M1078 M1079

Explanation

- **S1**: Selection of slave device. **S2**: Device selection (0: converter, 1: internal PLC). **S3**: Read address. **D**: Saving target.
- The ICOMR command can obtain the slave station's converter and the internal PLC's register value.

API 321	D	ICOMW	P	S1 S2 S3 D	Internal communications write

	Bit device			Word device							
	X	Y	M	K	H	KnX	KnY	KnM	T	C	D
S1				*	*						*
S2				*	*						*
S3				*	*						*
D				*	*						*

Notes on operand usage: none

16-bit command (9 STEP)			
ICOMW	Continuous execution type	ICOMW P	Pulse execution type

32-bit command (17 STEP)			
DICOM W	Continuous execution type	DICOM WP	Pulse execution type

Flag signal: M1077 M1078 M1079

Explanation

- **S1**: Selection of slave device. **S2**: Device selection (0: converter, 1: internal PLC). **S3**: Read address. **D**: Saving target.
- The ICOMW command write a value to the slave station's converter and the internal PLC's register.

Example

Please refer to the following example:

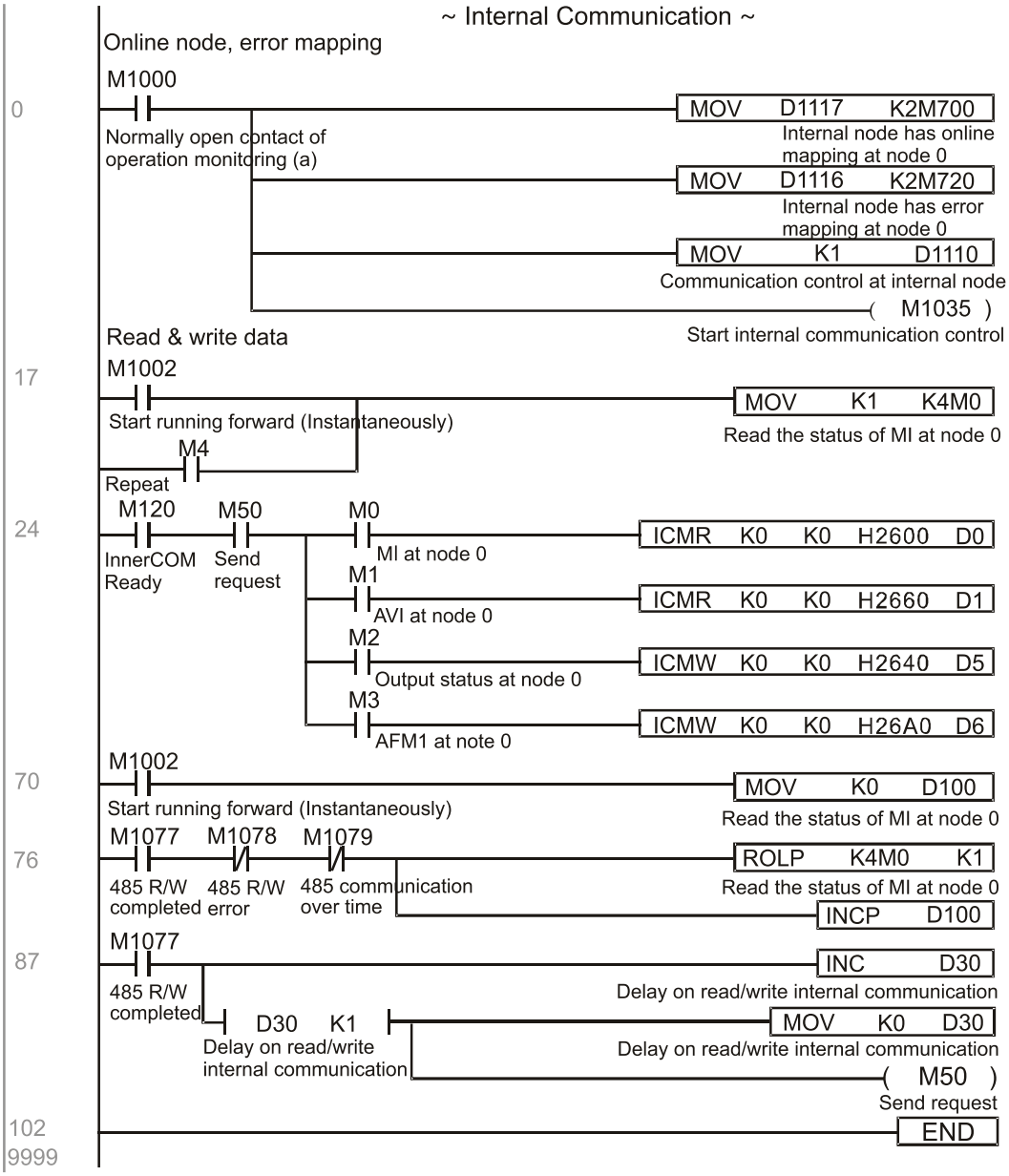

API 323	WPRA	P	S1 S2	Drive parameters write-in

	Bit device			Word device							
	X	Y	M	K	H	KnX	KnY	KnM	T	C	D
S1				*	*						*
S2				*	*						*

Notes on operand usage: none

16-bit command (5 STEP)			
WORA	Continuous execution type	WORAP	Pulse execution type

32-bit command			
-	-	-	-

Flag signal: none

Explanation

- **S1**: Data that is going to write in **S2**: Parameter address of the write-in data

Example

- Read the data of CH2000 drive's parameter H01.00 and write into D0, read data of H01.01 and write into D1.
- When M0 is ON, write the content of D10 into CH2000 drive's Pr.04-00 (1st step speed frequency).
- When parameter writes-in successfully, M1017 is ON.
- The WPR command does not support the write-in of 20XX address, but the RPR command supports the read-out of 21XX and 22XX.

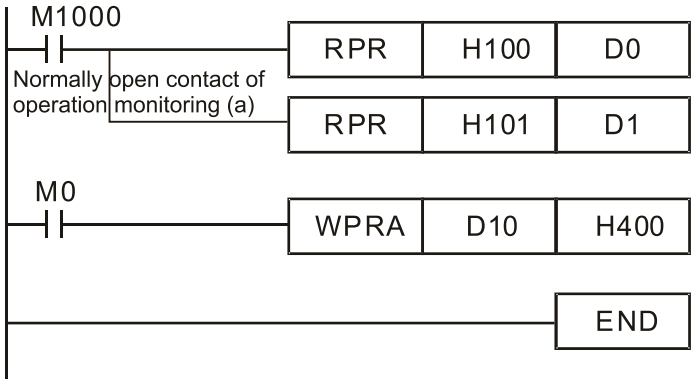

Recommendation

- When WPRA executes, the data is only written into the RAM area, and will get back to previous record when the power is off.

16-7 Error Display and Handling

Code	ID	Descript	Recommended handling approach
PLrA	47	RTC time check	Turn power ON and OFF when resetting the keypad time
PLrt	49	Incorrect RTC time	Turn power ON and OFF after making sure that the keypad is securely connected
PLod	50	Data writing memory error	Check whether the program has an error and download the program again
PLSv	51	Data write memory error during program execution	Restart power and download the program again
PLdA	52	Program transmission error	Try uploading again; if the error persists, sent to the manufacturer for service
PLFn	53	Command error while downloading program	Check whether the program has an error and download the program again
PLor	54	Program exceeds memory capacity or no program	Restart power and download the program again
PLFF	55	Command error during program execution	Check whether the program has an error and download the program again
PLSn	56	Check code error	Check whether the program has an error and download the program again
PLEd	57	Program has no END stop command	Check whether the program has an error and download the program again
PLCr	58	MC command has been used continuously more than nine times	Check whether the program has an error and download the program again
PLdF	59	Download program error	Check whether the program has an error and download again
PLSF	60	PLC scan time excessively long	Check whether the program code has a writing error and download again

16-8 CANopen Master Control Applications

Control of a simple multi-axis application is required in certain situations. If the device supports the CANopen protocol, a CH2000 can serve as the master in implementing simple control (position, speed, homing, and torque control). The setting method comprises the following seven steps:

Step 1: Activating CANopen Master Functions

1. Pr.09-45 = 1 (initiates Master functions); restart power after completing setting, the status bar on the KPC-CC01 digital keypad will display "CAN Master".
2. Pr.00-02 = 6 reset PLC (please note that this action will reset the program and PLC registers to the default values)
3. Turn power off and on again.
4. Use the KPC-CC01 digital keypad to set the PLC control mode as **"PLC Stop"** (if a newly-introduced drive is used, the blank internal PLC program will cause a PLFF warning code to be issued).

Step 2: Master memory settings

1. After connecting the 485 communications cable, use WPL Soft to set the PLC **status** as Stop (if the PLC mode has been switched to the **"PLC Stop"** mode, the PLC **status** should already be Stop)
2. Set the address and corresponding station number of the slave station to be controlled. For instance, if it is wished to control two slave stations (a maximum of 8 stations can be controlled simultaneously), and the station numbers are 21 and 22, it is only necessary to set D2000 and D2100 as 20 and 21, and then set D2200, D2300, D2400, D2500, D2600, and D2700 as 0. The setting method involves use of the PLC's WPL editing software WPL as follows:
   (1) Open WPL and implement communications > register edit (T C D) function

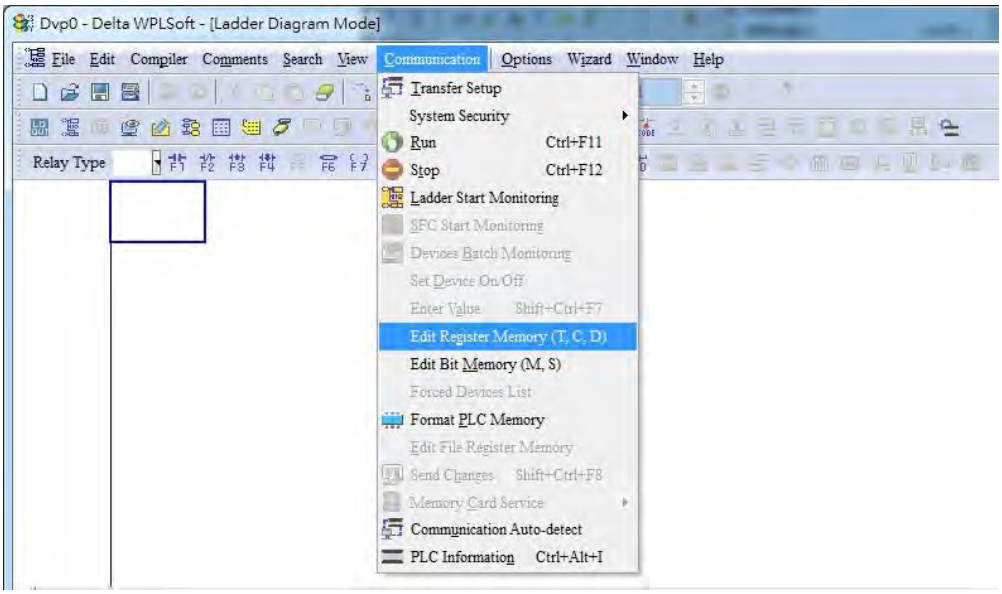

(2) After leaving the PLC register window, the register setting screen will appear, as shown below:

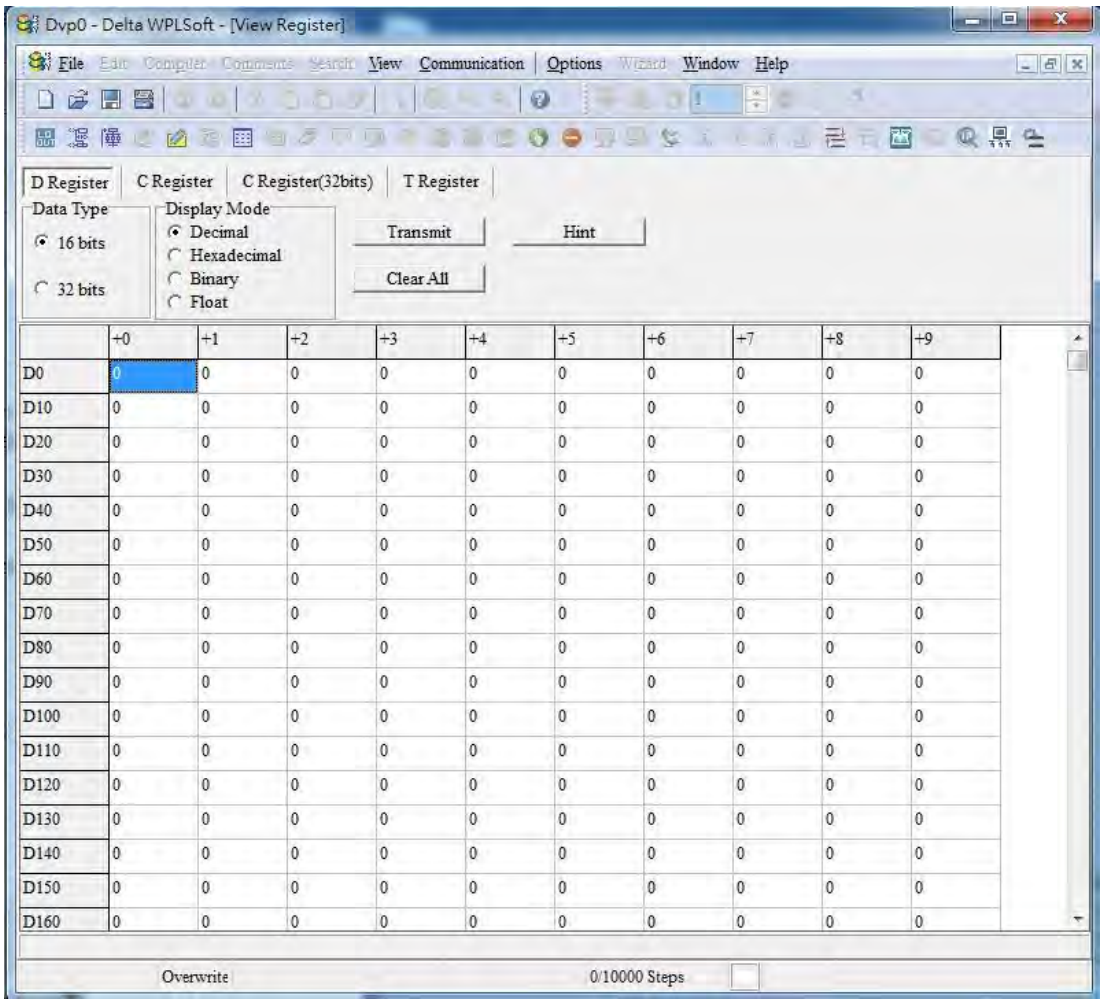

If there is a new PLC program and no settings have been made yet, you can read default data from the converter, and merely edit it to suit the current application.

If settings have already been made, however, the special D in the CANopen area will display the saved status (the CANopen D area is located at D1090 to D1099 and D2000 to D2799).

Assuming it is a new program, we will first read the default data from the converter; check the communications format if there is no communications link (the default PLC station number is 2, 9600, 7N2, ASCII). Perform the following steps:

1. Switch the PLC to Stop status
2. Press the transmit button
3. Click on read memory after exiting the window
4. Ignore D0–D399
5. Click on the confirm button.

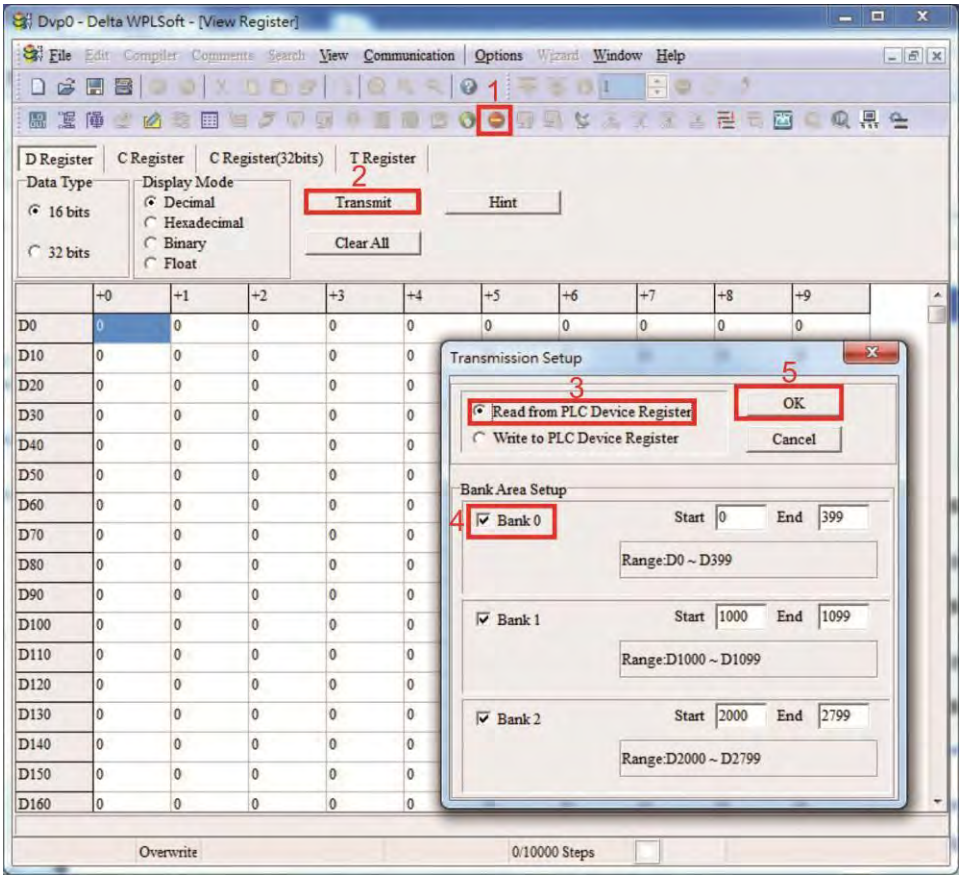

After reading the data, it is necessary to perform some special D settings. Before proceeding, we will first introduce the special D implications and setting range.

The CANopen Master's special D range is currently D1070 to D1099 and D2000 to D2799; this range is divided into 3 blocks:

- The first block is used to display CANopen's current status, and has a range of D1070–D1089
- The second block is used for CANopen's basic settings, and has a range of D1090–D1099
- The third block is the slave station mapping and control area, and has a range of D2000–D2799.

These areas are therefore introduced as follows:

The first contains the current CANopen status display:

When the master initializes a slave station, we can find out from D1070 whether configuration of the slave device has been completed; we can find out whether an error occurred in the configuration process from D1071 and whether the configuration is inappropriate from D1074. After entering normal control, we can find out whether the slave device is offline from D1073. In addition, we can check the slave device's read/write information using the CANRX, CANTX, and CANFLS commands; error information can be obtained from D1076 to D1079 if there has been a read / write failure.

Special D	Description of Function	R/W
D1070	Channel opened by CANopen initialization (bit0=Machine code0 …….)	R
D1071	Error channel occurring in CANopen initialization process (bit0=Machine code0 …….)	R
D1072	Reserved	-
D1073	CANopen break channel (bit0=Machine code0 …….)	R

Special D	Description of Function	R/W
D1074	Error code of master error 0: No error 1: Slave station setting error 2: Synchronizing cycle setting error (too small)	R
D1075	Reserved	-
D1076	SDO error message (main index value)	R
D1077	SDO error message (secondary index value)	R
D1078	SDO error message (error code L)	R
D1079	SDO error message (error code H)	R

The second area is for basic CANopen settings: (the PLC must have **stopped** when this area is used to make settings)

We must set the information exchange time for the master and slave station,

Special D	Description of Function	Default:	R/W
D1090	Synchronizing cycle setting	4	RW

Use D1090 to perform settings; setting time relationships include:

$$\text{Sync time} \geq \frac{1M}{Rate} * \frac{N}{4}$$

N: TXPDO + RXPDO

For instance, when communications speed is 500K, TXPDO + RXPDO have 8 sets, and synchronizing time will require more than 4 ms

We must also define how many slave stations will be opened. D1091 is the channel for defining station opening, and D2000+100*n is the station number defining this channel. See the detailed explanation below.

Slave station number **n**=0–7

Special D	Description of Function	R/W
D1091	Sets slave station ON or OFF (bit 0-bit 7 correspond to slave stations number 0-7)	RW
D2000+100***n**	Slave station number	RW

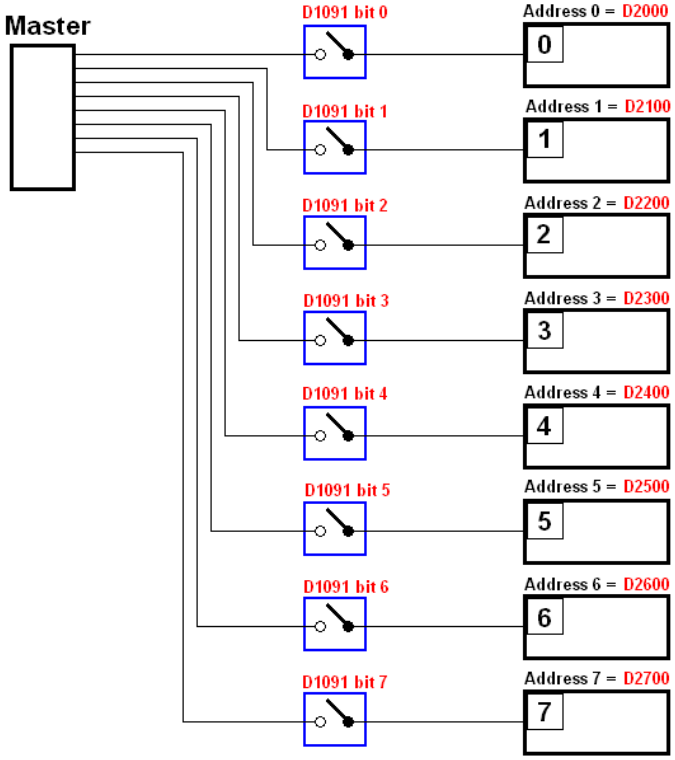

If slave devices have a slow start-up, the master can delay for a short time before performing slave station configuration; this time delay can be set via D1092.

Special D	Description of Function	Default	R/W
D1092	Delay before start of initialization	0	RW

With regard to slave device initialization, a delay time can be set to judge whether failure has occurred. If the communications speed is relatively slow, the delay time can be adjusted to judge whether initialization has been completed, which will ensure that there is time to perform slave device initialization.

Special D	Description of Function	Default	R/W
D1099	Initialization completion delay time Setting range: 1 to 60000 sec.	15 sec.	RW

After communication is successful, the system must detect whether there is a break in communications with the slave station. D1093 is used to set detection time, and D1094 sets the number of consecutive errors that will trigger a break error.

Special D	Description of Function	Default	R/W
D1093	Break time detection	1000ms	RW
D1094	Break number detection	3	RW

The packet type transmitted by PDO is set before establishing normal communications and generally does not require adjustment.

Special D	Description of Function	Default	R/W
D1097	Corresponding real-time transmission type (PDO) Setting range: 1–240	1	RW
D1098	Corresponding real-time receiving type (PDO) Setting range: 1–240	1	RW

The third block is the slave station mapping and control area.

CANopen provides a PDO method to perform mapping of the master and slave station memory, and enables the master to directly access read / write data in a certain memory area. The master will automatically perform data exchange with the corresponding slave device, and the read/write values can be seen directly from the special D area after real-time exchange (M1034 = 1 time) has been established. The CH2000 currently supports real-time mapping of four PDOs, and there are two types of PDO RXPDO (reads slave device information) and TXPDO (writes to slave device). In addition, in order to facilitate control, the CH2000 cannot perform mapping of commonly-used registers; the following is an overview of the current PDO mapping situation:

TXPDO							
PDO4 (Torque)		**PDO3 (Position)**		**PDO2 (Remote I/O)**		**PDO1 (Speed)**	
Description	Special D	Description	Special D	Description	Special D	Description	Special D
Controller word	D2008+100*n	Controller word	D2008+100*n	Slave device DO	D2027+100*n	Controller word	D2008+100*n
Target torque	D2017+100*n	Target position	D2020+100*n D2021+100*n	Slave device AO1	D2031+100*n	Target speed	D2012+100*n
Control method	D2010+100*n	Control method	D2010+100*n	Slave device AO2	D2032+100*n		
				Slave device AO3	D2033+100*n		

RXPDO							
PDO4 (Torque)		**PDO3 (Position)**		**PDO2 (Remote I/O)**		**PDO1 (Speed)**	
Description	Special D	Description	Special D	Description	Special D	Description	Special D
Mode word	D2009+100*n	Mode word	D2009+100*n	Slave device DI	D2026+100*n	Mode word	D2009+100*n
Actual torque	D2018+100*n	Actual position	D2022+100*n D2023+100*n	Slave device AI1	D2028+100*n	Actual frequency	D2013+100*n
Actual mode	D2011+100*n	Actual mode	D2011+100*n	Slave device AI2	D2029+100*n		
				Slave device AI3	D2030+100*n		

Because usage requires only simple to open the corresponding PDO, where TXPDO employs D2034+100*n settings and RXPDO employs D2067+100*n settings.

These two special D areas are defined as follows:

	PDO4		PDO3		PDO2		PDO1	
Default definition	Torque		Position		Remote I/O		Speed	
bit	15	14–12	11	10–8	7	6–4	3	2–0
Definition	En	Length	En	Length	En	Length	En	Length

En: indicates whether PDO is used

Length: indicates mapping of several variables

In a simple example, if we want to control a CH2000 slave device and make it to operate in speed mode, we only have to make the following settings:

D2034+100*n =000Ah

Length	TX PDO							
	PDO4		**PDO3**		**PDO2**		**PDO1**	
	Description	Special D	Description	Special D	Description	Special D	Description	Special D
1	Controller Word	D2008+100*n	Controller Word	D2008+100*n	Slave device DO	D2027+100*n	Controller Word	D2008+100*n
2	Target torque	D2017+100*n	Target	D2020+100*n D2021+100*n	Slave device AO1	D2031+100*n	Target speed	D2012+100*n
3	Control method	D2010+100*n	Control method	D2010+100*n	Slave device AO2	D2032+100*n		
4					Slave device AO3	D2033+100*n		

	PDO4		PDO3		PDO2		PDO1	
Definition	Torque		Position		Remote I/O		Speed	
bit	15	14–12	11	10–8	7	6–4	3	2–0
Definition	0	0	0	0	0	0	1	2

D2067+100*n =000Ah

Length	TX PDO							
	PDO4		PDO3		PDO2		PDO1	
	Description	Special D	Description	Special D	Description	Special D	Description	Special D
1	Controller Word	D2009+100*n	Controller Word	D2009+100*n	Slave device DI	D2026+100*n	Controller Word	D2009+100*n
2	Actual torque	D2018+100*r	Actual position	D2022+100*n D2023+100*n	Slave device AI1	D2028+100*n	Actual frequency	D2013+100*n
3	Actual mode	D2011+100*n	Actual mode	D2011+100*n	Slave device AI2	D2029+100*n		
4					Slave device AI3	D2030+100*n		

	PDO4		PDO3		PDO2		PDO1	
Definition	Torque		Position		Remote I/O		Speed	
bit	15	14–12	11	10–8	7	6–4	3	2–0
Definition	0	0	0	0	0	0	1	2

Switch the PLC to Run after completing settings. Now wait for successful initialization of CANopen (M1059 = 1 and M1061 = 0), and then initiate CANopen memory mapping (M1034 = 1). The control word and frequency command will now automatically refresh to the corresponding slave device (D2008+n*100 and D2012+n*100), and the slave device's status word and currently frequency will also be automatically sent back to the master station (D2009+n*100 and D2013+n*100). This also illustrates how the master can handle these tasks through read / write operations in the special D area.

Furthermore, it should be noted that the remote I/O of PDO2 can obtain the slave device's current DI and AI status, and can also control the slave device's DO and AO status. Nevertheless, after introducing a fully automatic mapping special D, the CH2000 CANopen master also provides additional information refreshes. For instance, while in speed mode, acceleration/deceleration settings may have been refreshed. The special D therefore also stores some seldom-used real-time information, and these commands can be refreshed using the CANFLS command. The following is the CH2000's current CANopen master data conversion area, which has a range of D2001+100*n–D2033+100*n, as shown below:

1. The range of n is 0–7
2. ●Indicates PDOTX, ▲Indicates PDORX; unmarked special D can be refreshed using the CANFLS command

Special D	Description of Function	Default	PDO Default				R/W
			1	2	3	4	
D2000+100*n	Station number n of slave station Setting range: 0–127 0: No CANopen function	0					RW
D2002+100*n	Manufacturer code of slave station number n (L)	0					R
D2003+100*n	Manufacturer code of slave station number n (H)	0					R
D2004+100*n	Manufacturer's product code of slave station number n (L)	0					R
D2005+100*n	Manufacturer's product code of slave station number n (H)	0					R

Basic definitions

Special D	Description of Function	Default	PDO Default				R/W
			1	2	3	4	
D2006+100*n	Communications break handling method of slave station number n	0					RW
D2007+100*n	Error code of slave station number n error	0					R
D2008+100*n	Control word of slave station number n	0	●		●	●	RW
D2009+100*n	Status word of slave station number n	0	▲		▲	▲	R
D2010+100*n	Control mode of slave station number n	2					RW
D2011+100*n	Actual mode of slave station number n	2					R

Velocity Control

Special D	Description of Function	Default	PDO Default				R/W
			1	2	3	4	
D2001+100*n	Torque restriction on slave station number n	0					RW
D2012+100*n	Target speed of slave station number n (rpm)	0	●				RW
D2013+100*n	Actual speed of slave station number n (rpm)	0	▲				R
D2014+100*n	Error speed of slave station number n (rpm)	0					R
D2015+100*n	Acceleration time of slave station number n (ms)	1000					RW
D2016+100*n	Deceleration time of slave station number n (ms)	1000					RW

Torque control

Special D	Description of Function	Default	PDO Default				R/W
			1	2	3	4	
D2017+100*n	Target torque of slave station number n (-100.0% – +100.0%)	0				●	RW
D2018+100*n	Actual torque of slave station number n (XX.X%)	0				▲	R
D2019+100*n	Actual current of slave station number n(XX.XA)	0					R

Position control

Special D	Description of Function	Default	PDO Default:				R/W
			1	2	3	4	
D2020+100*n	Target of slave station number n (L)	0			●		RW
D2021+100*n	Target of slave station number n (H)	0					RW
D2022+100*n	Actual position of slave station number n (L)	0			▲		R
D2023+100*n	Actual position of slave station number n (H)	0					R
D2024+100*n	Speed chart of slave station number n (L)	10000					RW
D2025+100*n	Speed chart of slave station number n (H)	0					RW

Remote I/O

Special D	Description of Function	Default	PDO Default:				R/W
			1	2	3	4	
D2026+100*n	MI status of slave station number n	0		▲			R
D2027+100*n	MO setting of slave station number n	0		●			RW
D2028+100*n	AI1 status of slave station number n	0		▲			R
D2029+100*n	AI2 status of slave station number n	0		▲			R
D2030+100*n	AI3 status of slave station number n	0		▲			R
D2031+100*n	AO1 setting of slave station number n	0		●			RW
D2032+100*n	AO2 setting of slave station number n	0		●			RW
D2033+100*n	AO3 setting of slave station number n	0		●			RW

After gaining an understanding of special D definitions, we return to setting steps. After entering the values corresponding to D1090 to D1099, D2000+100*n, D2034+100*n and D2067+100*n, we can begin to perform downloading, which is performed in accordance with the following steps:

1. D2000 and D2100 are set as 20 and 21, and D2200, D2300, D2400, D2500, D2600, and D2700 are set as 0; if a setting of 0 causes problems, D1091 can be set as 3, and slave stations 2 to 7 can be closed.
2. Switch PLC to Stop status.
3. Press the transmit button.
4. Click on write memory after exiting the window.
5. Ignore D0–D399.
6. Change the second range to D1090–D1099.
7. Click on Confirm.

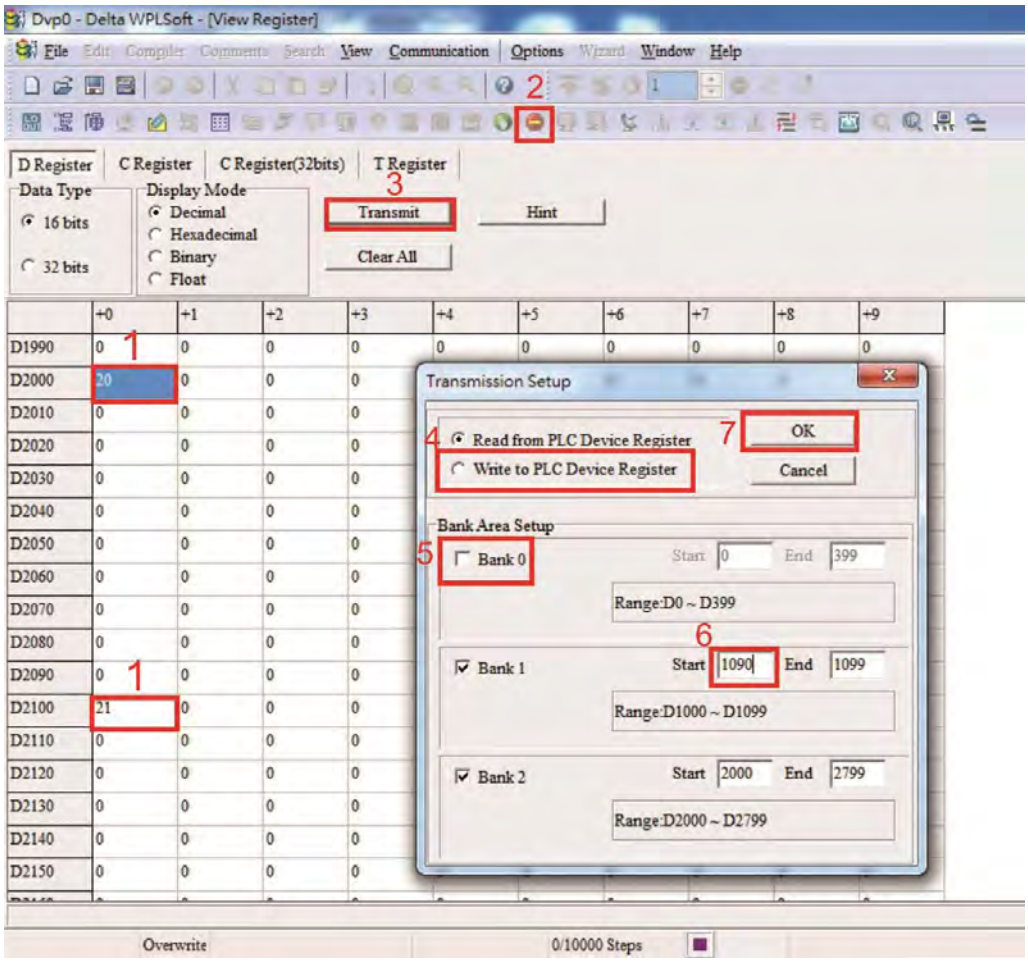

(3) Another method can be used to set D1091: Determine which of slave stations 0 to 7 will not be needed, and set the corresponding bits to 0. For instance, if it is not necessary to control slave stations 2, 6 and 7, merely set D1091 = 003B, and the setting method is the same as described above: Use WPL to initiate **communications > use register edit (T C D)** function to perform settings.

Step 3: Set the master's communications station number and communications speed

1. When setting the master's station number (Pr.09-46, default is set as 100), make sure not to use the same number as a slave station.
2. Set the CANopen communications speed (Pr.09-37); regardless of whether the drive is defined as a master or slave station, the communications speed is set via this parameter.

Step 4: Write program code

Real-time access: Can directly read/write to or from the corresponding D area.

Non real-time access:

- **Read command**: Use the CANRX command for reading. M1066 will be 1 when reading is completed; M1067 will be 1 if reading is successful, and M1067 will be 0 if an error has occurred.
- **Write command**: Use the CANTX command for writing. M1066 will be 1 when writing is completed; M1067 will be 1 if writing is successful, and M1067 will be 0 if an error has occurred.
- **Refresh command:** Use CANFLS command to refresh (if there are RW attributes, the master will write to the slave station; if there are RO attributes, the slave station will return the read values to the master); M1066 will be 1 if refresh has been completed; M1067 will be 1 if refresh is successful, and M1067 will be 0 if an error has occurred.

  NOTE:

  When using CANRX, CANTX or CANFLS, internal implementation commands will wait until M1066 is completed before executing the next CANRX, CANTX or CANFLS.

  Afterwards, download program to the drive (Please note that the PLC's default communications format is ASCII 7N2 9600, and the station number is 2. The WPL must therefore be modified, and the WPL setting pathway is **settings > communications settings**)

Step 5: Set the slave stations' station numbers, communications speed, control source, and command source

Delta's CH2000 and EC series devices currently support the CANopen communications interface drive, and the corresponding slave station numbers and communications speed parameters are as follows:

	Corresponding device parameters		Value	Definition
	CH2000	E-C		
Slave Station Address	09-36	09-20	0	Disable CANopen hardware interface
			1–127	CANopen Communication address
Communication Speed	09-37	09-21	0	1 Mbps
			1	500 Kbps
			2	250 Kbps
			3	125 Kbps
			4	100 Kbps
			5	50 Kbps
Control Source	00-21	-	3	
	-	02-01	5	

	Corresponding device parameters		Value	Definition
	CH2000	E-C		
Frequency Source	00-20	-	6	
	-	02-00	5	
Torque Source	11-33	-	3	
	-	-	-	
Position Source	11-40	-	3	
	-	-	-	

Delta's A2 Servo currently supports the CANopen communications interface, and the corresponding slave station numbers and communications speed parameters are as follows:

	Corresponding device parameters	Value	Definition
	A2		
Slave Station Address	03-00	1–127	CANopen Communication address
Communication Speed	03-01 bit 8-11 XRXX	R= 0	125Kbps
		R= 1	250Kbps
		R= 2	500Kbps
		R= 3	750Kbps
		R= 4	1Mbps
Control/Command Source	01-01	B	

Step 6: Connect hardware wiring

When performing wiring, note the head and tail terminal resistance; connection methods are as follows:

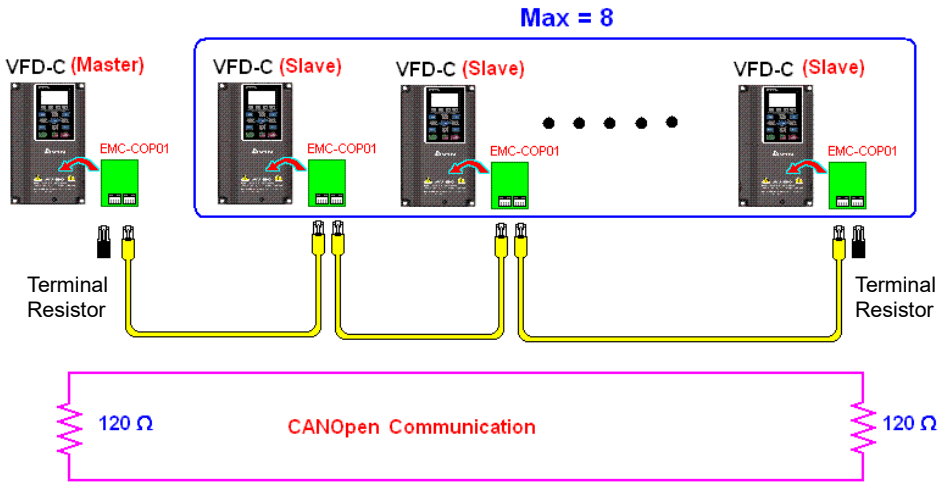

Step 7: Initiate control

After a program has been written and downloaded, switch the PLC mode to Run. Merely turn power to master and slave stations off and then on again.

Refer to CANMasterTest 1 vs. 2 drive.dvp

Example

CH2000 drive one-to-two control

Step 1: Activating CANopen Master functions

1. Pr.09-45 = 1 (initiates Master functions); restart power after completing setting, the status bar on the KPC-CC01 digital keypad will display "CAN Master".
2. Pr.00-02 = 6 reset PLC (please note that this action will reset the program and PLC registers to the default values)
3. Turn power off and on again.

4. Use the KPC-CC01 digital keypad to set the PLC control mode as "**PLC Stop**" (if a newly-introduced drive is used, the blank internal PLC program will cause a PLFF warning code to be issued).

Step 2: Master memory correspondences

1. Enable WPL
2. Use keypad set PLC mode as Stop (PLC 2)
3. WPL read D1070 to D1099, D2000 to D2799
4. Set D2000=10, D2100=11
5. Set D2100, 2200, 2300, 2400, 2500, 2600, 2700=0
6. Download D2000 to D2799 settings

Step 3: Set the master's communications station number and communications speed

1. When setting the master's station number (Pr.09-46, default is set as 100), make sure not to use the same number as a slave station.
2. Set the CANopen communications speed as 1M (Pr.09-37 = 0); regardless of whether the drive is defined as a master or slave station, the communications speed is set via this parameter.

Step 4: Write program code

Real-time access: Can directly read / write to or from the corresponding D area.

Non real-time access:

- **Read command**: Use the CANRX command for reading. M1066 will be 1 when reading is complete; M1067 will be 1 if reading is successful, and M1067 will be 0 if an error has occurred.
- **Write command**: Use the CANTX command for writing. M1066 will be 1 when writing is complete; M1067 will be 1 if writing is successful, and M1067 will be 0 if an error has occurred.
- **Refresh command:** Use CANFLS command to refresh (if there are RW attributes, the master will write to the slave station; if there are RO attributes, the slave station will return the read values to the master); M1066 will be 1 if refresh has been completed; M1067 will be 1 if refresh is successful, and M1067 will be 0 if an error has occurred.

  NOTE:

  When using CANRX, CANTX or CANFLS, internal implementation commands will wait until M1066 is completed before executing the next CANRX, CANTX or CANFLS.

  Afterwards, download program to the drive (Please note that the PLC's default communications format is ASCII 7N2 9600, and the station number is 2. The WPL must therefore be modified, and the WPL setting pathway is **settings > communications settings**)

Step 5: Set the slave stations' station numbers and communications speed

Slave station no. 1: Pr.09-37 = 0(Speed 1M) Pr.09-36 = 10 (Node ID 10)

Slave station no. 2: Pr.09-37 = 0(Speed 1M) Pr.09-36 = 10 (Node ID 11)

Step 6: Connect hardware wiring

When performing wiring, note the head and tail terminal resistance; connection methods are as follows:

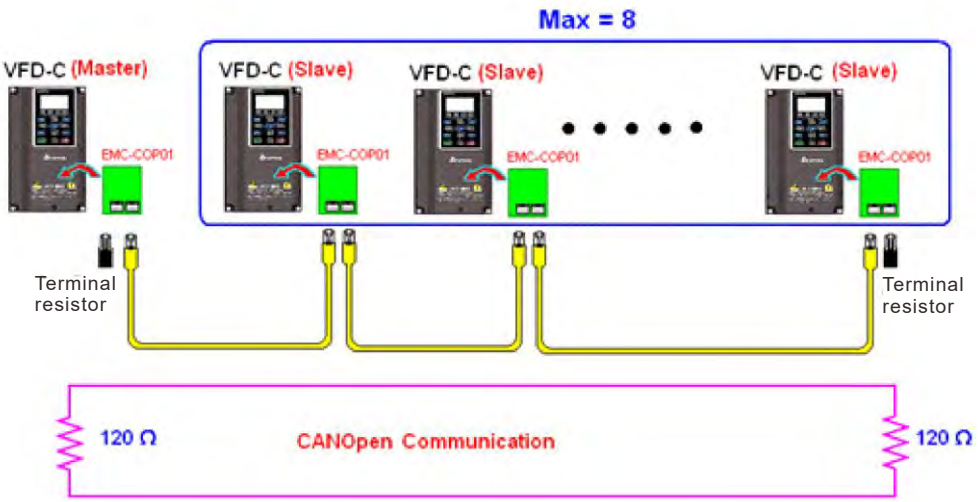

Step 7: Initiate control

After a program has been written and downloaded, switch the PLC mode to Run. Merely turn power to master and slave stations off and then on again.

Refer to CANMasterTest 1 vs. 2 driver.dvp

16-9 Explanation of Various PLC Mode Controls (Speed, Torque, Homing, and Position)

The torque mode and position mode are based on FOC vector control and speed mode also supports FOC vector control. Control therefore cannot be performed successfully unless finishing motor parameter auto tuning ahead of time for the torque mode and position mode, and the speed mode based on FOC.

In addition, motors are classified as two types: IM and PM. For IM, the auto tuning of the motor parameter will be enough. For PM, after completing motor parameter auto tuning, the auto tuning of motor origin angle of deviation should be completed as well. Please refer to Chapter 12-1 Pr.05-00 for detailed explanation.

NOTE: If a PM belongs to Delta's ECMA series, motor parameters can be directly input from data in the servo motor catalog, and parameter study will not be needed.

Control methods and settings are explained as follows:

Speed control:

Register table for speed mode:

Control special M

Special M	Description of Function	Attributes
M1025	Drive frequency = set frequency (ON) / drive frequency =0 (OFF)	RW
M1026	Drive operating direction FWD(OFF) / REV(ON)	RW
M1040	Hardware power (Servo On)	RW
M1042	Quick stop	RW
M1044	Pause (Halt)	RW
M1052	Lock frequency (lock, frequency locked at the current operating frequency)	RW

Status special M

Special M	Description of Function	Attributes
M1015	Frequency attained (when used together with M1025)	RO
M1056	Servo On Ready	RO
M1058	On Quick Stopping	RO

Control special D

Special D	Description of Function	Attributes
D1060	Mode setting (speed mode is 0)	RW

Status special D

Special D	Description of Function	Attributes
D1037	Converter output frequency (0.00–600.00)	RO
D1050	Actual operating mode (speed mode is 0)	RO

Speed mode control commands:

FREQ(P)	S1	S2	S3
	Target speed	The first acceleration time setting	The first deceleration time setting

Example of speed mode control:

Before performing speed control, if the FOC (magnetic field orientation) control method is used, setting of electromechanical parameters must first be completed.

1. Setting D1060 = 0 will shift the converter to the speed mode (default).
2. Use the FREQ command to control frequency, acceleration time, and deceleration time.
3. Set M1040 = 1, the drive will now be excited, but the frequency will be 0.
4. Set M1025 = 1, the drive frequency command will now jump to the frequency designated by FREQ, and acceleration/deceleration will be controlled on the basis of the acceleration time and deceleration time specified by FREQ.
5. M1052 can be used to lock the current operating frequency.
6. M1044 can be used to temporarily pause operation, and the deceleration method will comply with deceleration settings.
7. M1042 can be used to perform quick stop, and deceleration will be as quick as possible without giving rise to an error. (There may still be a jump error if the load is too large.)
8. Control user rights: M1040 (Servo ON) > M1042 (Quick Stop) > M1044 (Halt) > M1052 (LOCK)

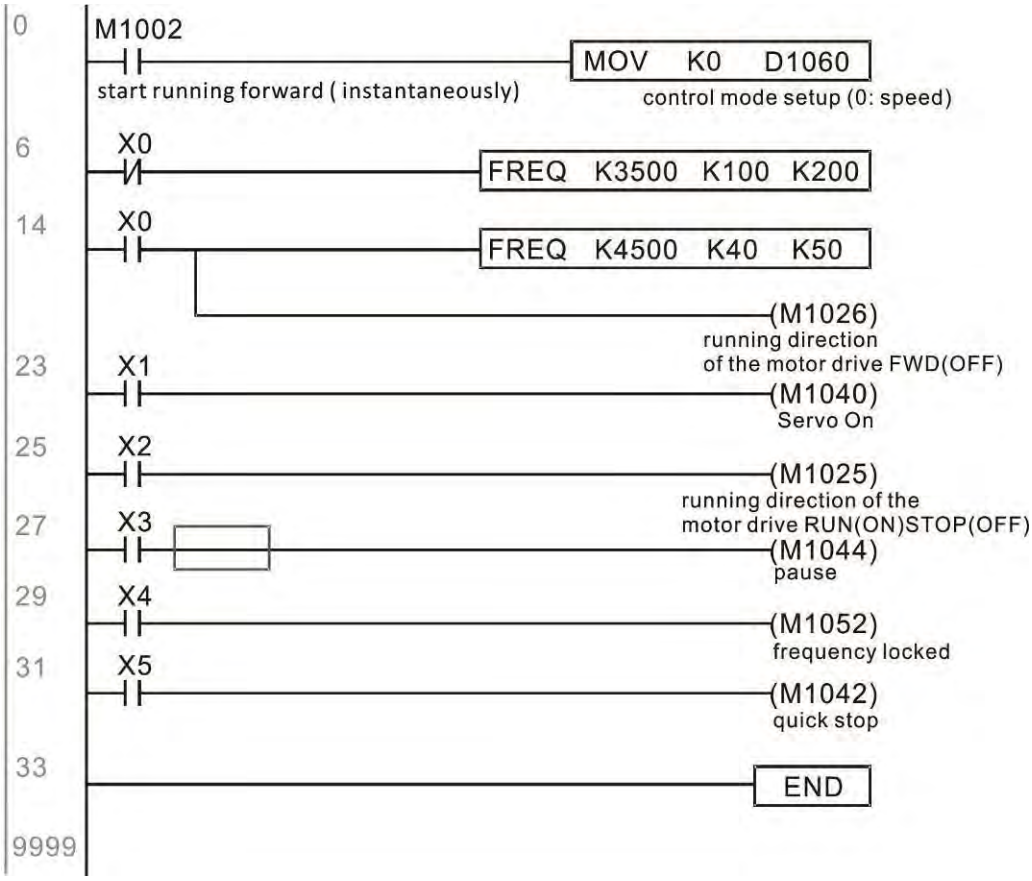

Torque control:

Register table for torque mode:

Control special M

Special M	Description of Function	Attributes
M1040	Servo On	RW

Status special M

Special M	Description of Function	Attributes
M1056	Servo On Ready	RO
M1063	Torque attained	RO

Control special D

Special D	Description of Function	Attributes
D1060	Operating mode setting (torque mode is 2)	RW

Status special D

Special D	Description of Function	Attributes
D1050	Actual operating mode (speed mode is 0)	RO
D1053	Actual torque	RO

Torque mode control commands:

TORQ(P)	S1	S2
	Target torque (with numbers)	Frequency restrictions

Example of torque mode control:

The setting of electromechanical parameters involved in torque control must be completed before implementing torque control.

1. Set D1060 = 2 to change the converted to the torque mode.
2. Use the TORQ command to implement torque control and speed limits.
3. Set M1040 = 1; the drive will now be excited, and immediately jump to the target torque or speed limit. D1053 can be used to find out the current torque.

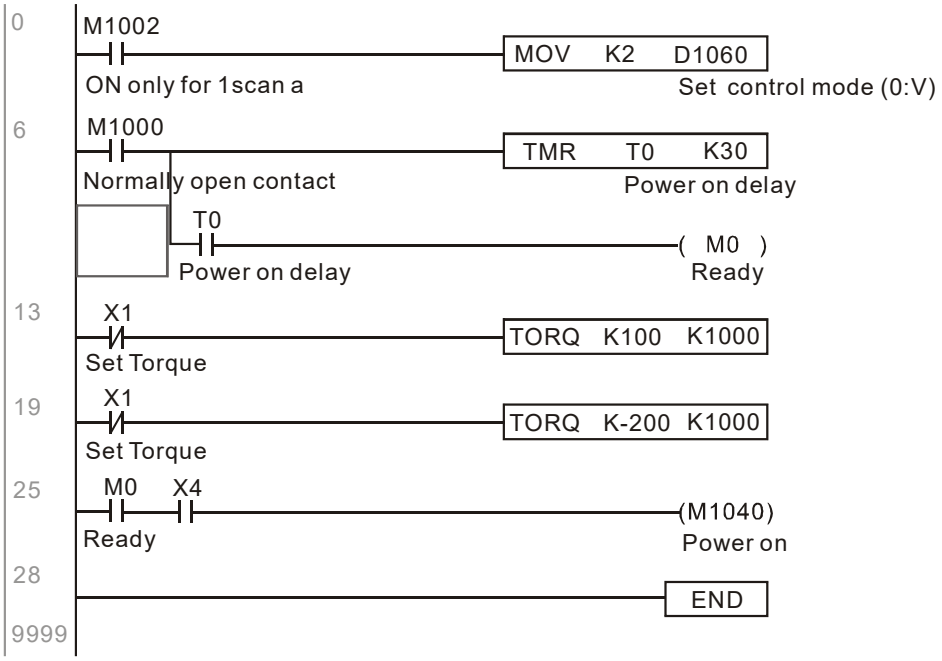

Homing control / position control:

Register table in homing mode / position mode:

Control special M

Special M	Description of Function	Attributes
M1040	Servo On	RW
M1048	Move to new position, must use control mode as position mode (D1060 = 1) and M1040 = 1	RW
M1050	Absolute position / relative position (0: relative / 1: absolute)	RW
M1055	Search for origin (home start), must use control mode as position mode (D1060 = 3) and M1040 = 1	RW

Status special M

Special M	Description of Function	Attributes
M1064	Target reached	RO
M1070	Return home complete	RO
M1071	Homing error	RO

Control special D

Special D	Description of Function	Attributes
D1060	Operating mode setting (position mode is 1, homing mode is 3)	RW

Status special D

Special D	Description of Function	Attributes
D1050	Actual operating mode (speed mode is 0)	RO
D1051	Actual position (Low word)	RO
D1052	Actual position (High word)	RO

NOTE: D1051 and D1052 must be combined to give the actual location, and it has a serial number.

Position mode control commands:

DPOS(P) S1
Target (with numbers)

Example of homing mode / position mode control:

First complete setting of electromechanical parameters connected with position before implementing homing control or position control.

1. Set Pr.00-40 to select the homing method and the corresponding limit sensors and origin. (Setting the MI function gives a reverse rotation limit of 44, a forward rotation limit of 45, and an origin proximity of 46. Because the CH2000 currently only supports a Z-phase origin, the encoder card must provide Z-phase.)
2. Set D1060 = 3 to change the converter to the homing mode.
3. Set M1040 = 1
   In the VF/SVC/VFPG mode, will enter the STANDBY mode (Pr.01-34 can be used to access the STANDBY mode's action options).
   In the FOC+PG mode, zero speed holding will occur
4. Set M1055 = 1, and the drive will now start to search for the origin.

5. When homing is complete, M1070 will change to ON. If you now set D1060 = 1, the control mode will switch to position mode (please note that M1040 will not change to off; this mechanical origin move).
6. The DPOS command can now be used to designate the drive's target location. M1050 or Pr.00-12 can be used to set a change in absolute or relative position.
7. Implement M1048 Pulse ON once (must be more than 1 ms in duration), and the converter will begin to move toward the target (M1040 must be 1 to be effective). The current position can be obtained from D1051 and D1052.

Part 1: The initialization mode is defined as the "homing" mode from the beginning (set D1060 = 3). X2 is used to implement converter excitation.

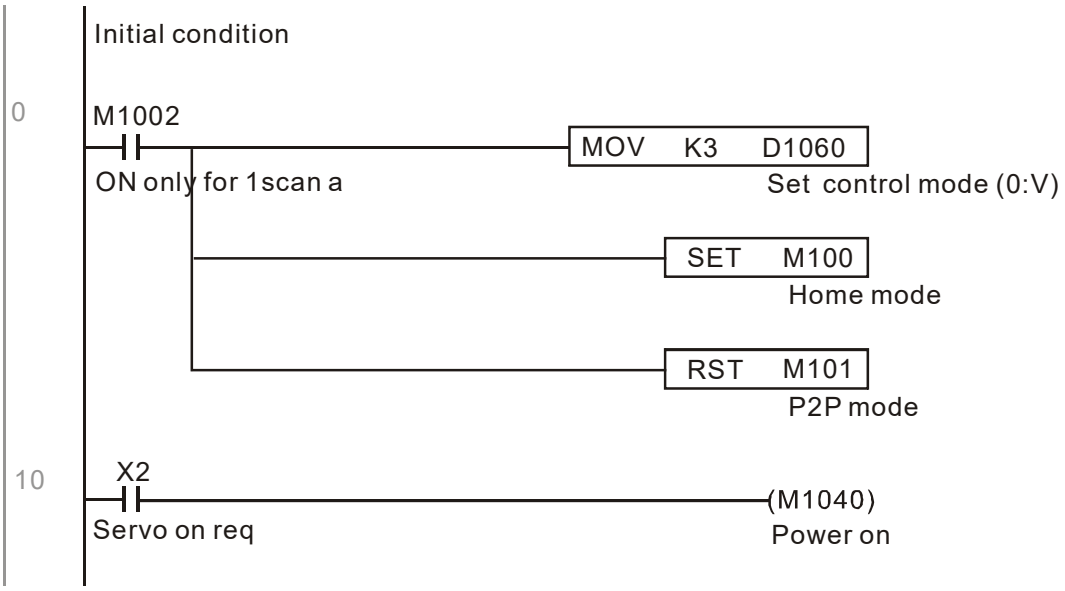

Part 2: Homing; Use X3 to trigger homing action; will automatically switch to position mode after completion.

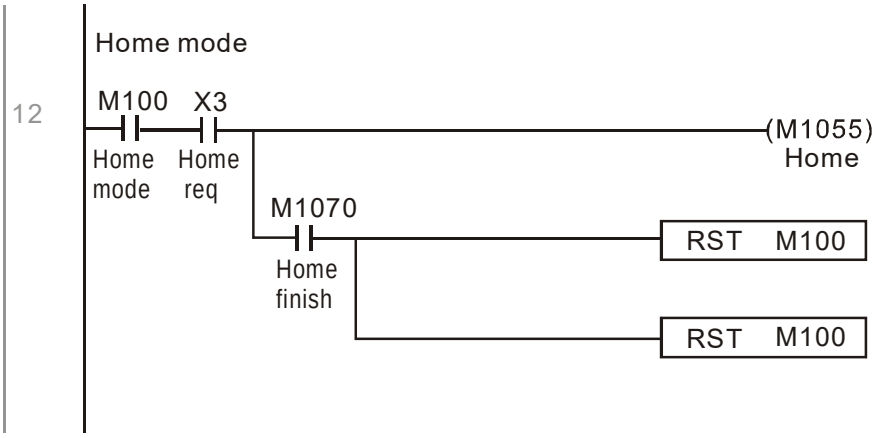

Part 3: Point-to-point movement; switch to position mode (set D1060 = 1), and move back and forth between position points. (+300000 – -300000)

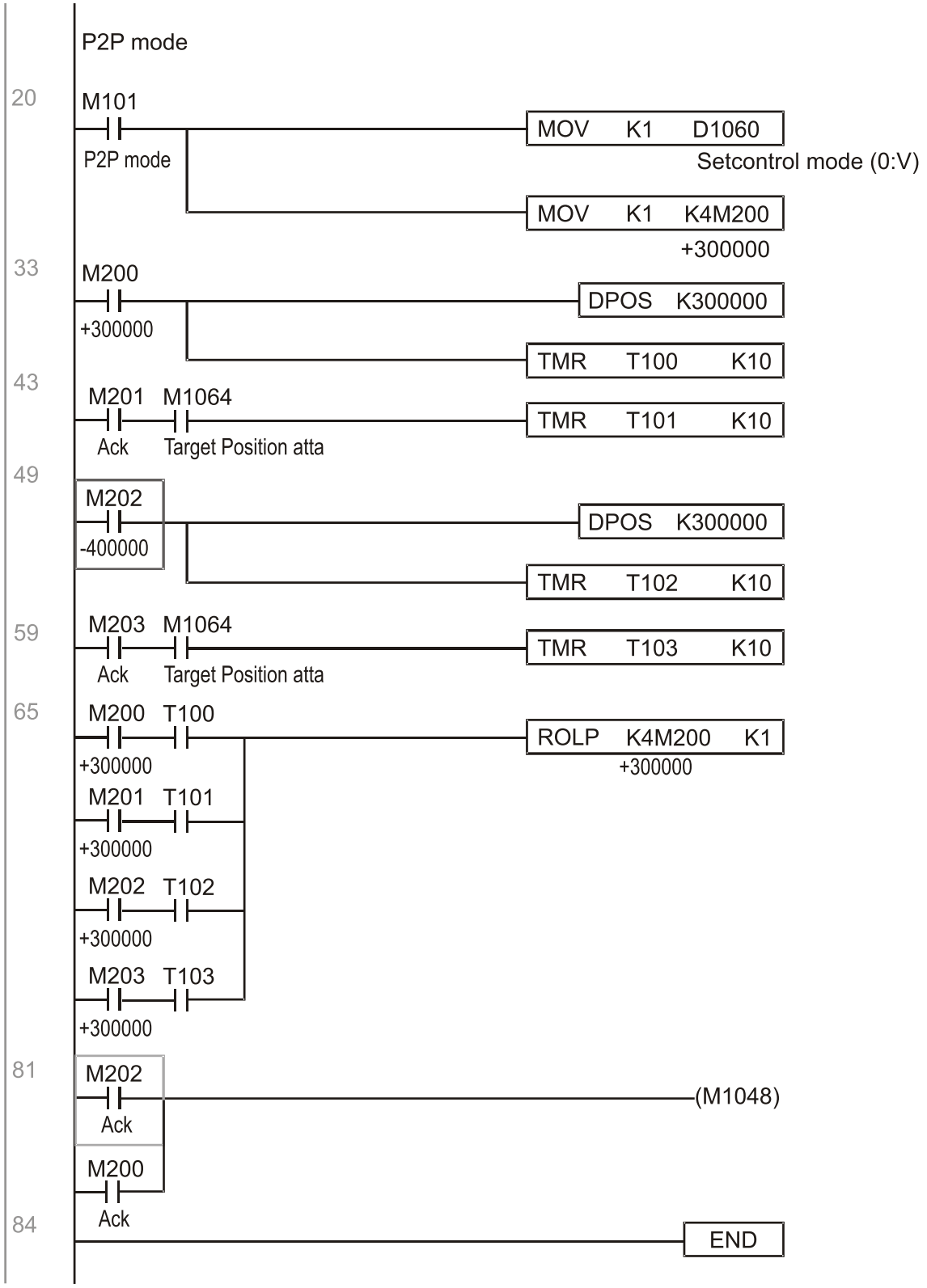

NOTE: If homing is not needed in an application, the first and second parts can be skipped. However, the M1040 condition from Part 1 must be included, and the writing method in Part 1 involve the use of X2 to achieve direct access. In addition, when M101 is used at the beginning of Part 3 to set the control mode, it can be rewritten as M1002, which will put the PLC immediately into the position mode when it starts running.

16-10 Internal Communications Main Node Control

The protocol has been developed in order to facilitate the use of RS-485 instead of CANopen in certain application situations. The RS-485 protocol offers similar real-time characteristics as CANopen. The maximum number of slave devices is 8.

Internal communications have a master-slave structure. The initiation method is very simple:

Slave device:
Set Pr.09-31 = -1 to -8 in order to access 8 nodes, and set Pr.00-20 = 1 to define the control source as RS-485 and access the reference sources that must be controlled, namely speed command (Pr.00-21 = 2), torque command (Pr.11-33 = 1), and position command (Pr.11-40 = 2). This will complete slave device settings. (PLC functions do not need to be activated)

System:
Setting the master is even simpler; it is only necessary to set Pr.09-31 = -10, and enable the PLC.

Hardware wiring: The master and slave stations are connected via the RS-485 serial port. The CH2000 provides two types of RS-485 serial port interfaces, see the figure below: (refer to Chapter 06 “Control Terminals” concerning detailed terminal connections)

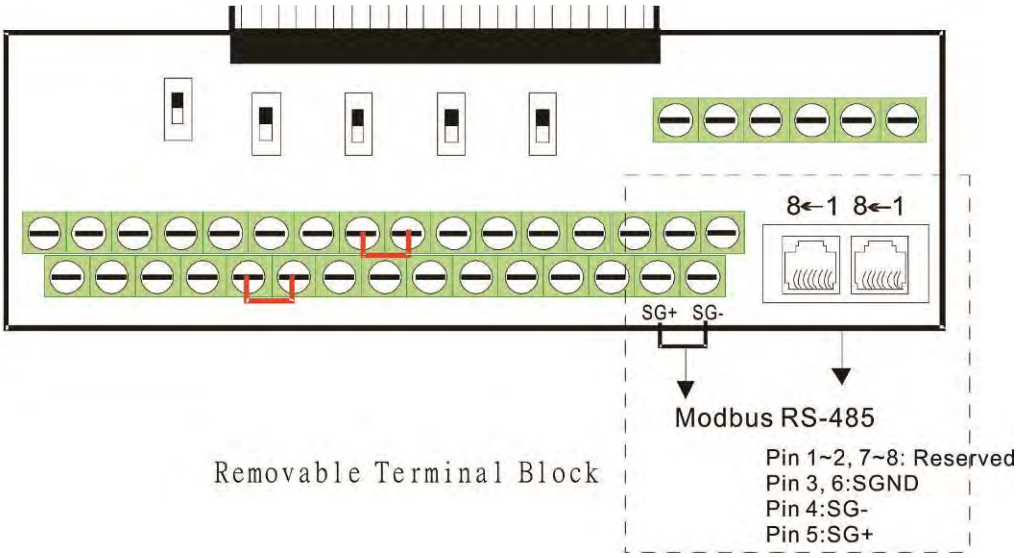

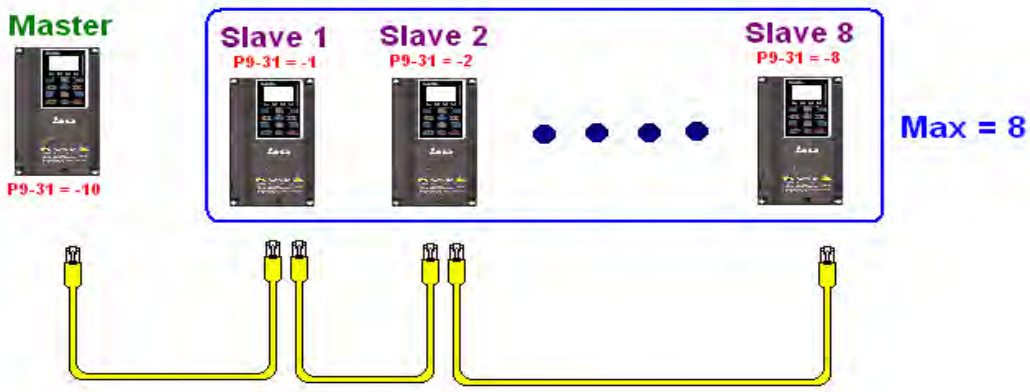

Master programming: In a program, D1110 can be used to define a slave station to be controlled (1–8, if set as 0, can jump between 8 stations). Afterwards, M1035 is set as 1, and the memory positions of the master and slave stations will correspond. At this time, it is only necessary to send commands to the correlation slave station address to control that station. The following is a register table connected with internal communications:

Control special M

Special M	Description of Function	Attributes
M1035	Initiates internal communications control	RW

Control special D

Special D	Description of Function	Attributes
D1110	Internal node communications number 1–8 (set the station number of the slave station to be controlled)	RW

Special D	Description of Function							Attributes
	Definition	bit	User Rights	Speed Mode	Location Mode	Torque Mode	Homing Mode	
D1120 + 10*N	Internal node N control command	0	4	Command functions	-	-	Homing Origin	RW
		1	4	Reverse rotation requirements	Immediate change	-	-	
		2	4	-	-	-	-	
		3	3	Temporary pause	Temporary pause	-	-	
		4	4	Frequency locking	-	-	Temporary pause	
		5	4	JOG	-	-	-	
		6	2	Quick Stop	Quick Stop	Quick Stop	Quick Stop	
		7	1	Servo ON	Servo ON	Servo ON	Servo ON	
		11–8	4	Speed interval switching	Speed interval switching	-	-	
		13–12	4	Deceleration time change	-	-	-	
		14	4	Enable Bit 13–8	Enable Bit 13–8	-	-	
		15	4	Clear error code	Clear error code	Clear error code	Clear error code	
D1121 + 10*N	Internal node N control mode			0	1	2	3	RW
D1122 + 10*N	Internal node N reference command L			Speed command (no number)	Position command (with numbers)	Torque command (with numbers)	-	RW
D1123 + 10*N	Internal node N reference command H			-		Speed limit	-	RW

NOTE: N = 0–7

Status special D

Special D	Description of Function	Attributes
D1115	Internal node synchronizing cycle (ms)	RO
D1116	Internal node error (bit0 = slave device 1, bit1 = slave device 2,…bit7 = slave device 8)	RO
D1117	Internal node online correspondence (bit0 = slave device 1, bit1 = slave device 2,…bit7 = slave device 8)	RO

Special D	Description of Function					Attributes
	bit	Speed Mode	Location Mode	Torque Mode	Homing Mode	
D1126 + 10*N	0	Frequency command arrival	Position command attained	Torque command attained	Zero command completed	RO
	1	Clockwise	Clockwise	Clockwise	Clockwise	
		Counterclockwise:	Counterclockwise:	Counterclockwise:	Counterclockwise:	
	2	Warning	Warning	Warning	Warning	
	3	Error	Error	Error	Error	
	5	JOG				
	6	Quick Stop	Quick Stop	Quick Stop	Quick Stop	
	7	Servo ON	Servo ON	Servo ON	Servo ON	
D1127 + 10*N		Actual frequency	Actual position (with numbers)	Actual torque (with numbers)	-	RO
D1128 + 10*N		-		-	-	

NOTE: N = 0 – 7

Example: Assume it is desired to control slave station 1 operation at frequencies of 30.00 Hz and 60.00 Hz, status, and online node correspondences:

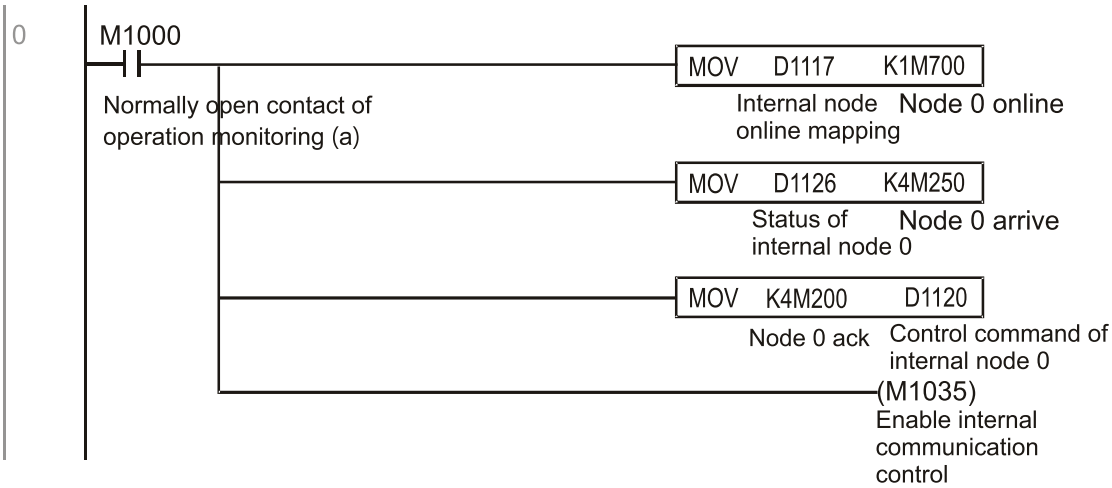

When it is judged that slave station 1 is online, delay 3 sec. and begin control

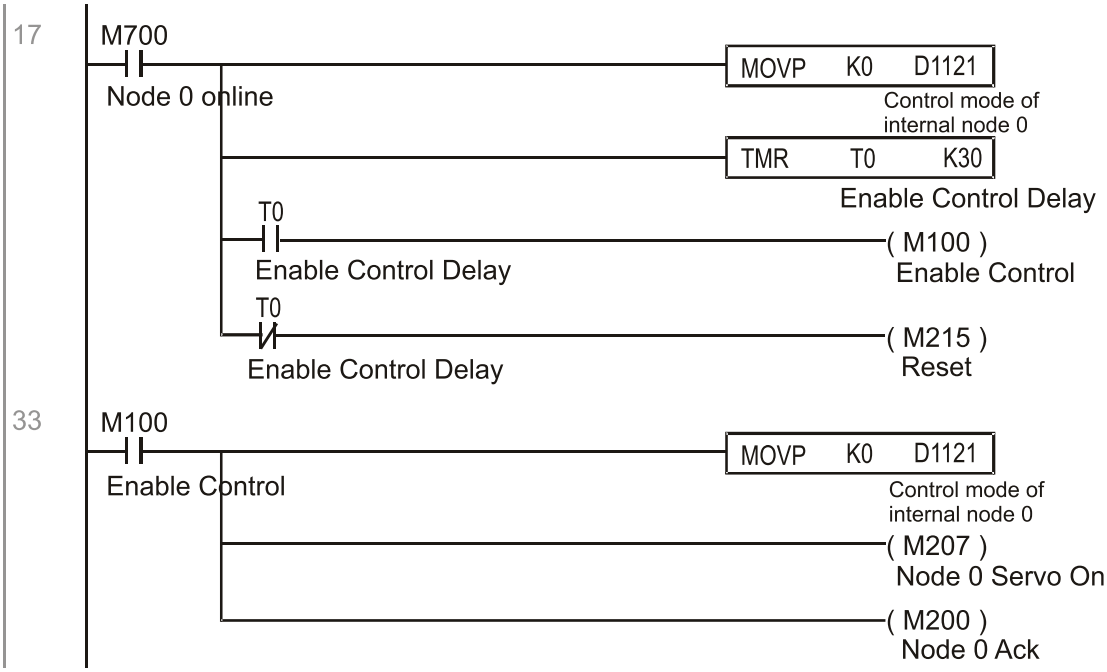

It is required slave station 1 maintains forward rotation at 30.00Hz for 1 sec., and maintains reverse rotation at 60.00 Hz for 1 sec., and repeat this cycle continuously.

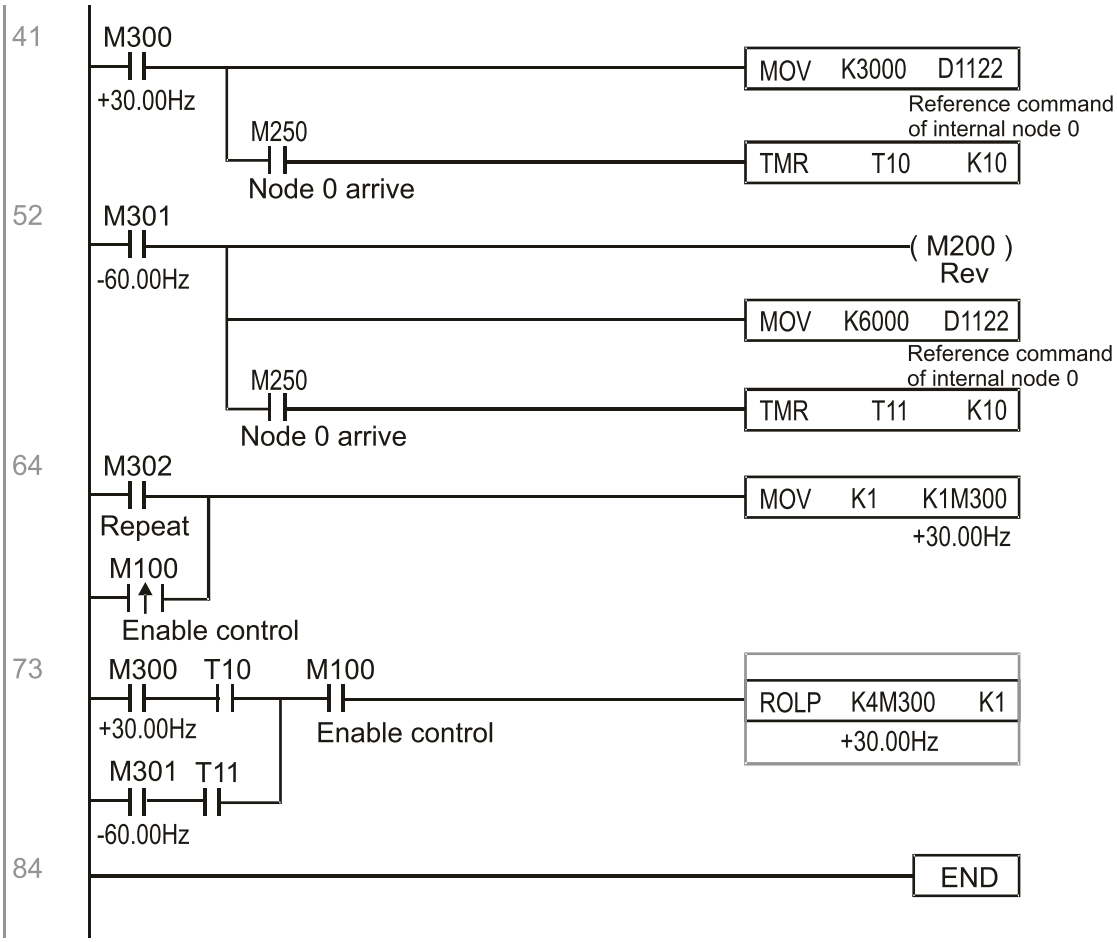

16-11 Count Function Using MI8

16-11-1 High-speed count function

The CH2000's MI8 supports one-way pulse counting, and the maximum speed is 100K. The starting method is very simple, and only requires setting M1038 to begin counting. The 32 bit count value is stored on D1054 and D1055 in non-numerical form. M1039 can reset the count value to 0.

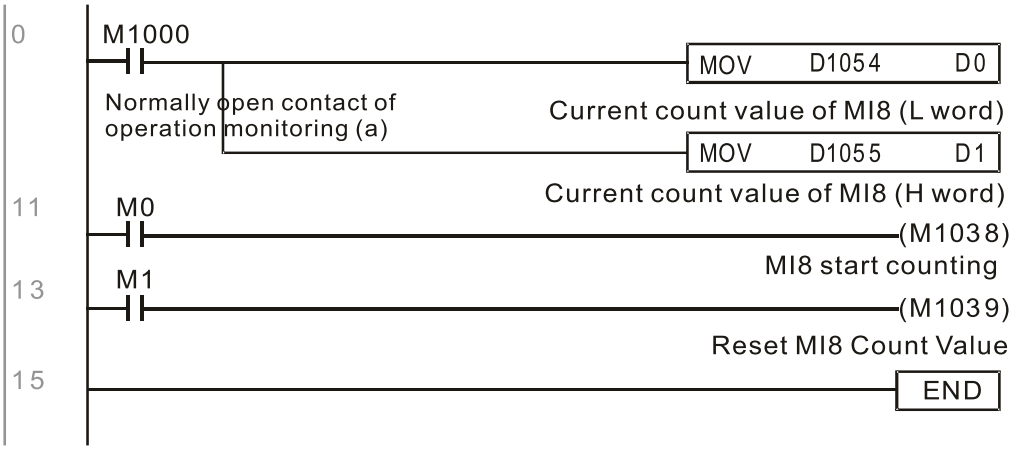

NOTE: When the PLC program defines MI8 for use as a high-speed counter, and also for use in PLC procedures, it must be written to M1038 or M1039, and the original MI8 functions will be disabled.

16-11-2 Frequency calculation function

Apart from high-speed counting, the CH2000's MI8 can also convert a received pulse to frequency. The following figure shows that there is no conflict between frequency conversion and count calculations, which can be performed simultaneously.

PLC speed calculation formula

D1057 Speed

D1058 Interval between calculations

D1059 Decimal places

Assuming that there are 5 input pulses each second, (see figure below) we set D1058 = 1000 ms = 1.0 sec. as the calculation interval. This enables five pulses to be sent to the converter each second.

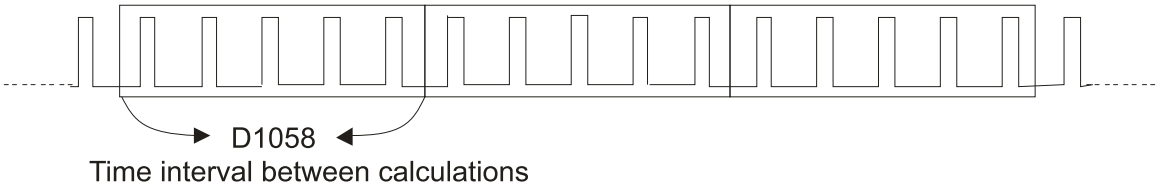

Assuming that each 5 pulses correspond to 1Hz, we set D1057 = 5.

Assuming that we wish to display numbers to two decimal places, we set D1059 = 2, which is also 1.00 Hz. The numerical value displayed at D1056 is 100. For simplicity, the D1056 conversion formula can be expressed as in the following table:

$$D1056 = \frac{\text{Pulses per second}}{D1057} \times \frac{1000}{D1058} \times 10^{D1059}$$

16-12 Modbus Remote IO Control Applications (use MODRW)

The CH2000's internal PLC supports 485 read / write functions, which can be realized using the MODRW command. However, the 485 serial port must be defined as available for the PLC's 485 use before writing a program, and the Pr.09-31 must be set as -12. After completing settings, the standard functions defined by 485 can be used to implement read/write commands at other stations. Communications speed is defined by Pr.09-01, the communications format is defined by Pr.09-04, and the PLC's current station number is defined by Pr.09-35. The CH2000 currently supports the functions read coil (0x01), read input (0x02), read register (0x03), write to single register (0x06), write to several coils (0x0F), and write to several registers (0x10). Explanations and the usage of these functions are provided as follows:

MODRW command					General Meaning	Slave Device is Delta's PLC Meaning	Slave Device is Delta's Converter Meaning
S1	S2	S3	S4	S5			
Node ID	Command	Address	Return: D area	Length			
K3	H01	H500	D0	K18	Read coil (bit)	Read 18 bits of data corresponding to slave station 3 PLC Y0 to Y21. This data is stored by bit 0 to 15 of the station's D0 and bit 0 to bit 3 of D1.	Does not support this function
K3	H02	H400	D10	K10	Read input (bit)	Read 10 bits of data corresponding to slave station 3 PLC X0 to X11. This data is stored by bit 0 to 9 of this station's D10.	Does not support this function
K3	H03	H600	D20	K3	Read register (word)	Read 3 words of data corresponding to slave station 3 PLC T0 to T2. This data is stored by D20 to D22.	Read 3 words of data corresponding to slave station 3 converter parameters 06-00 to 06-02. This data is stored by D20 to D22
K3	H06	H610	D30	XX	Write to single register (word)	Write slave station 3 PLC's T16 to this station's D30 value	Write slave station 3 converter 06 to 16 parameter to this station's D30 value
K3	H0F	H509	D40	K10	Write to multiple coils (Bit)	Write slave station 3 PLC's Y11 to Y22 to bit 0 to 9 of D40.	Does not support this function
K3	H10	H602	D50	K4	Write to multiple registers (word)	Write slave station 3 PLC's T2 to T5 to D50 to D53	Write slave station 3 converter 06-02 to 06-05 parameters to this station's D50 to D53

NOTE: XX indicates doesn't matter

After implementing MODRW, the status will be displayed in M1077 (485 read/write complete), M1078 (485 read / write error), and M1079 (485 read/write time out). M1077 is defined so as to immediately revert to 0 after the MODRW command has been implemented. However, any of three situations—a report of no error, a data error report, or time out with no report—will cause the status of M1077 to change to ON.

Example program: Testing of various functions

At the start, will cause the transmitted time sequence to switch to the first data unit.

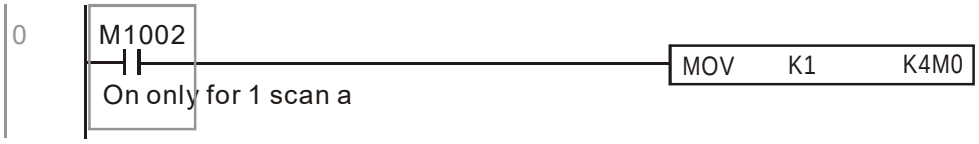

When the reported message indicates no error, it will switch to the next transmitted command

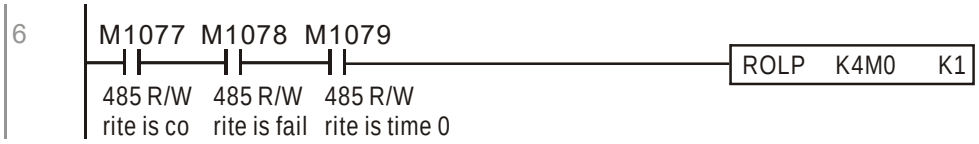

If time out occurs or an error is reported, the M1077 will change to On. At this time, after a delay of 30 scanning cycles, it will re-issue the original command once

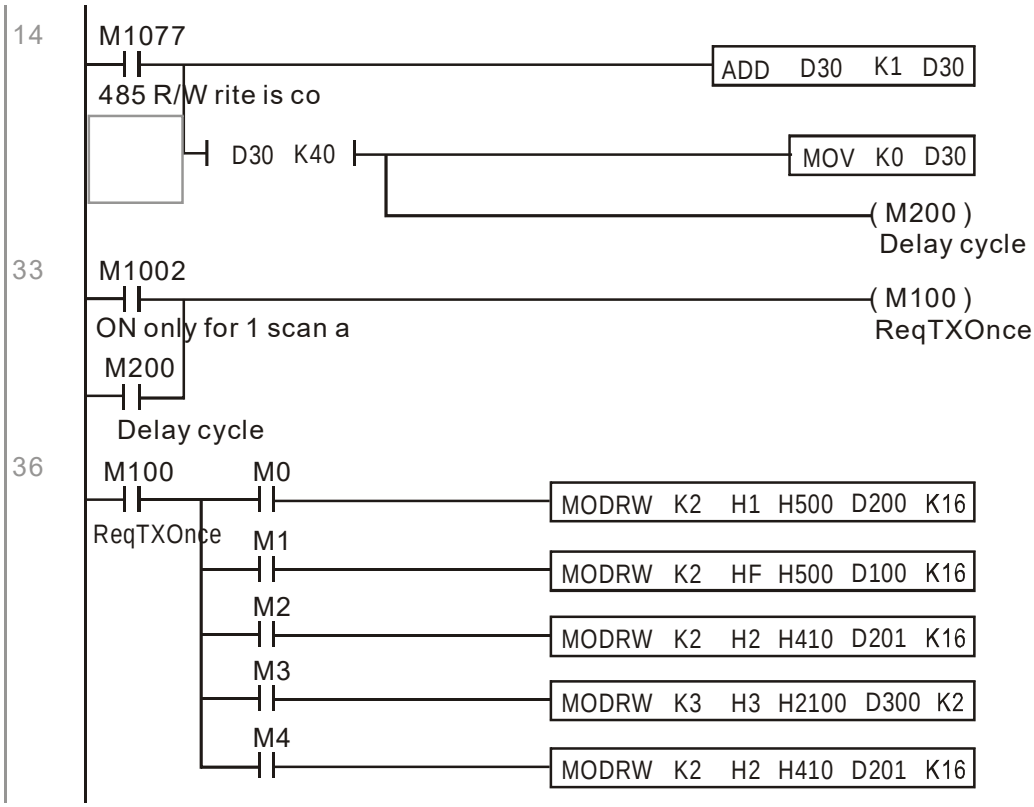

It will repeat after sending all commands

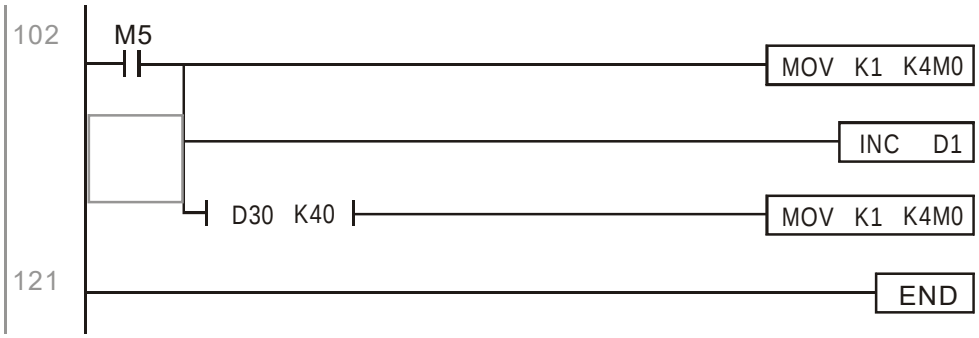

Practical applications:
Actual use to control the RTU-485 module.

Step 1: Set the communications format. Assume that the communications format is 115200, 8,N,2, RTU
CH2000: The default PLC station number is set as 2 (Pr.09-35)
Pr.09-31 = -12 (COM1 is controlled by the PLC), Pr.09-01 = 115.2 (The communications speed is 115200) Pr.09-04 = 13 (The format is 8,N,2, RTU)

RTU-485: The station number = 8 (give example)

ID7	ID6	ID5	ID4	ID3	ID2	ID1	ID0
0	0	0	0	1	0	0	0

PA3	PA2	PA1	PA0	DR2	DR1	DR0	A/R
1	**0**	**0**	**0**	**1**	**1**	**1**	**0**

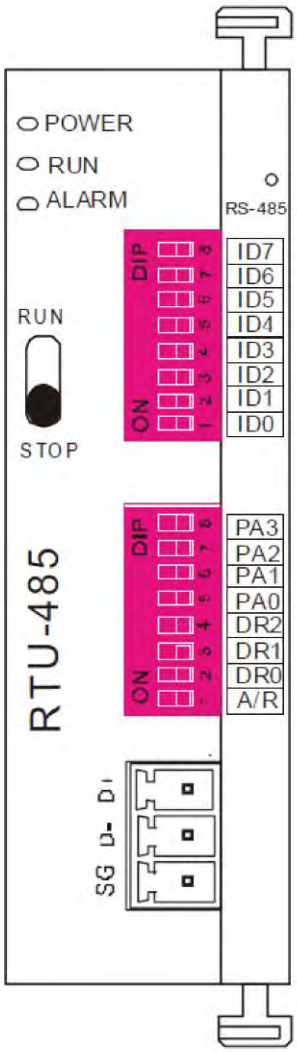

Communication station #:
ID0~ ID7 are defined as 2^0, 2^1, 2^2...2^6, 2^7

Communication protocol

PA3	PA2	PA1	PA0	A/R	Communication Protocol
OFF	OFF	OFF	OFF	ON	7,E,1 · ASCII
OFF	OFF	OFF	ON	ON	7,O,1 · ASCII
OFF	OFF	ON	OFF	ON	7,E,2 · ASCII
OFF	OFF	ON	ON	ON	7,O,2 · ASCII
OFF	ON	OFF	OFF	ON	7,N,2 · ASCII
OFF	ON	OFF	ON	ON	8,E,1 · ASCII
OFF	ON	ON	OFF	ON	8,O,1 · ASCII
OFF	ON	ON	ON	ON	8,N,1 · ASCII
ON	OFF	OFF	OFF	ON	8,N,2 · ASCII
OFF	ON	OFF	ON	OFF	8,E,1 · RTU
OFF	ON	ON	OFF	OFF	8,O,1 · RTU
OFF	ON	ON	ON	OFF	8,N,1 · RTU
ON	OFF	OFF	OFF	OFF	8,N,2 · RTU

DR2	DR1	DR0	Communicaton Speed
OFF	OFF	OFF	1,200 bps
OFF	OFF	ON	2,400 bps
OFF	ON	OFF	4,800 bps
OFF	ON	ON	9,600 bps
ON	OFF	OFF	19,200 bps
ON	OFF	ON	38,400 bps
ON	ON	OFF	57,600 bps
ON	ON	ON	115,200 bps

Step 2: Install control equipment. We sequentially connect a DVP16-SP (8 IN 8 OUT), DVP-04AD (4 channels AD), DVP02DA (2 channels DA), and DVP-08ST (8 switches) to the RTU-485.

The following corresponding locations can be obtained from the RTU-485's configuration definitions:

Module	Terminals	485 Address
DVP16-SP	X0–X7	0400H–0407H
	Y0–Y7	0500H–0507H
DVP-04AD	AD0–AD3	1600H–1603H
DVP02DA	DA0–DA1	1640H–1641H
DVP-08ST	Switch 0–7	0408H–040FH

Step 3: Physical configuration

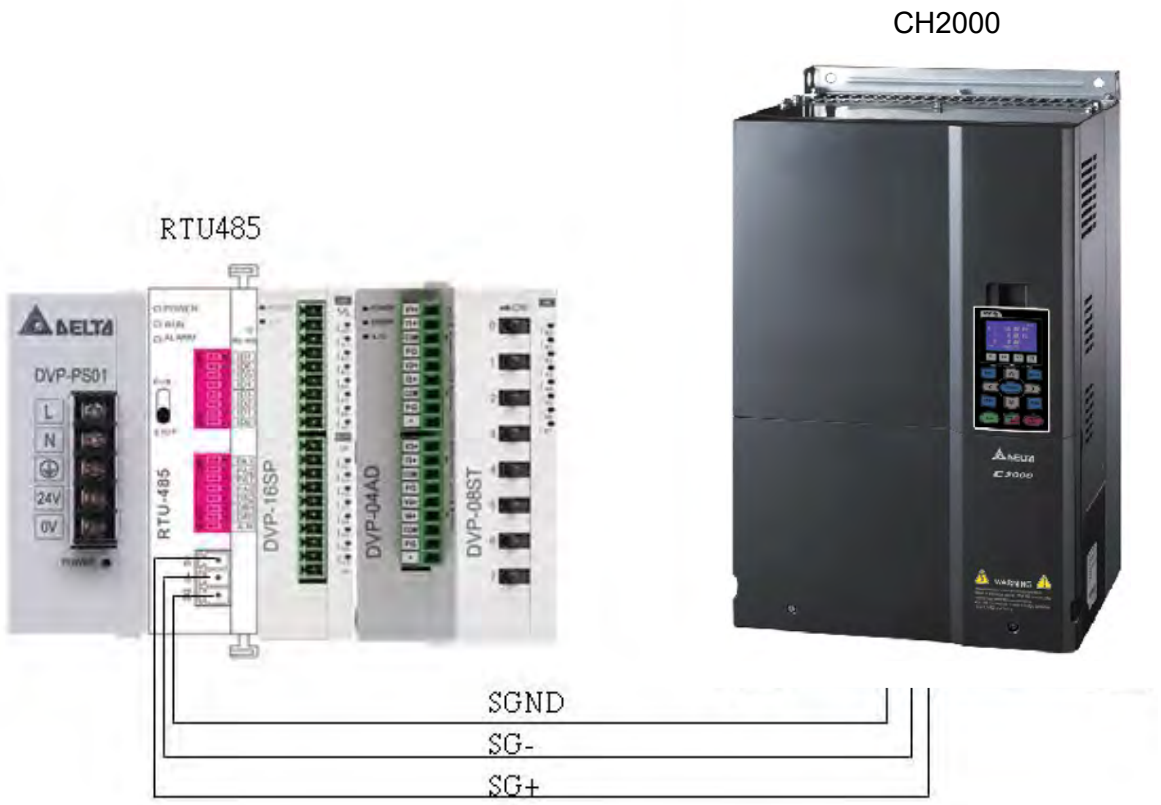

Step 4: Write to PLC program

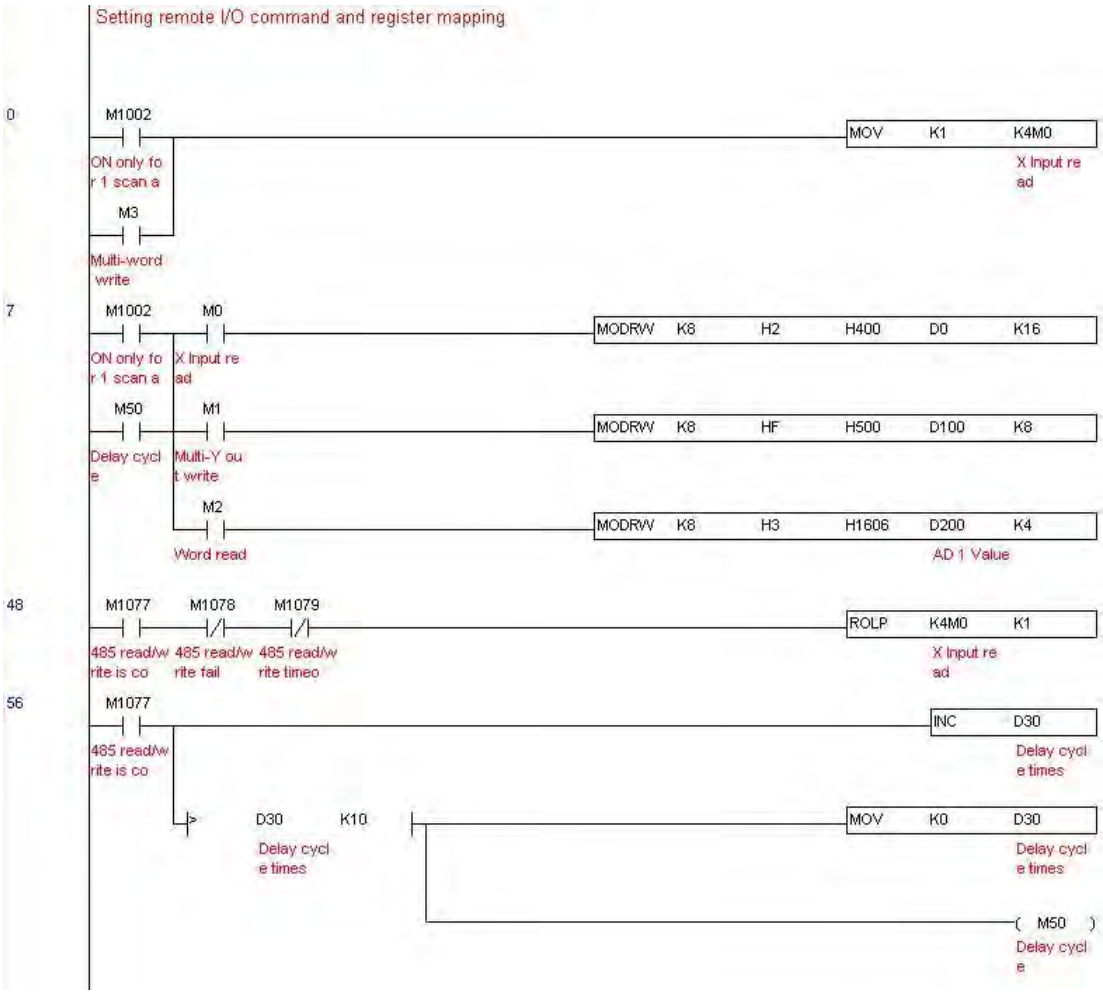

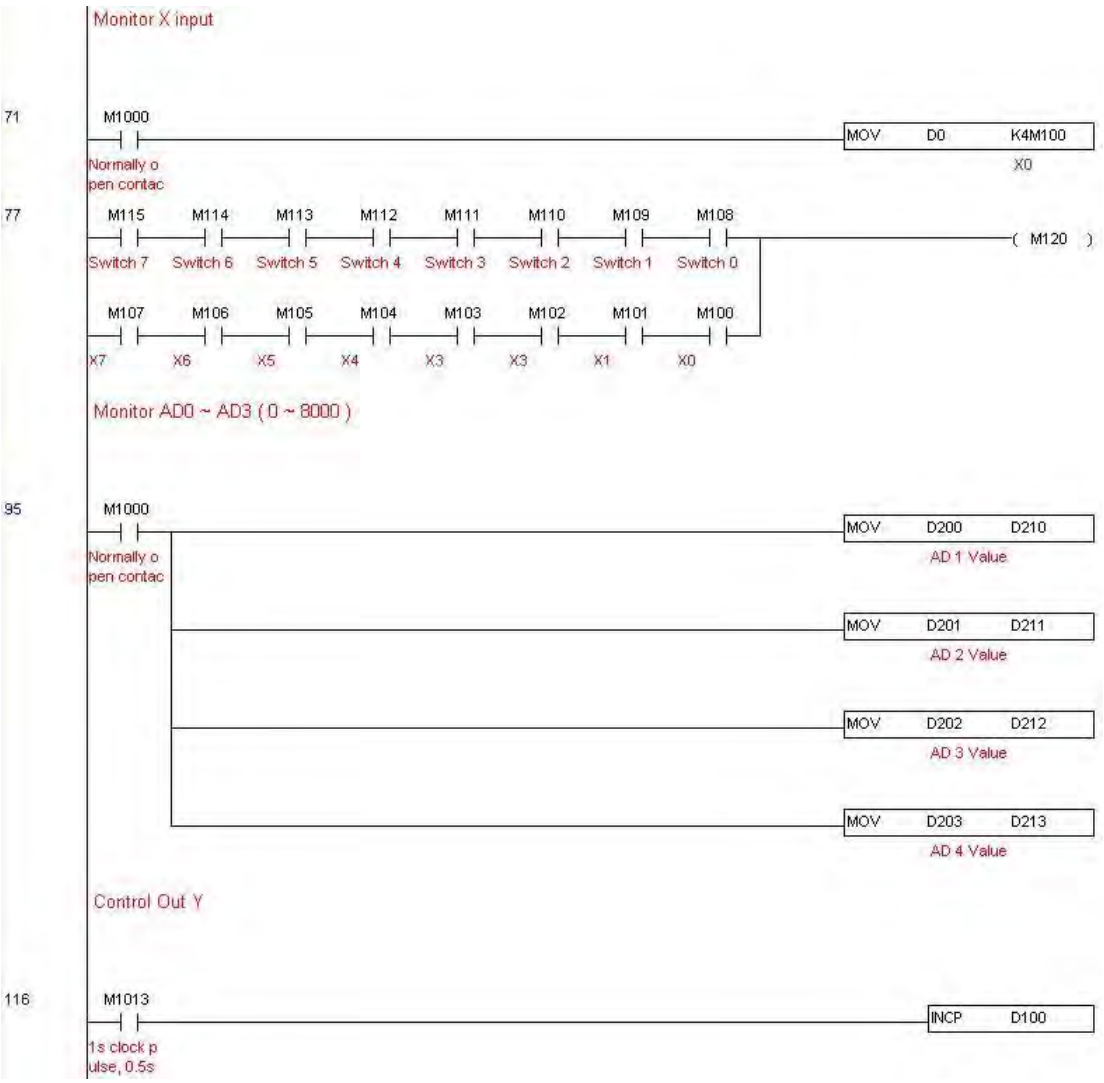
Monitor X input
71
M1000
Normally o
pen contac
MOV D0 K4M100
X0
77
M115 M114 M113 M112 M111 M110 M109 M108
Switch 7 Switch 6 Switch 5 Switch 4 Switch 3 Switch 2 Switch 1 Switch 0
(M120)
M107 M106 M105 M104 M103 M102 M101 M100
X7 X6 X5 X4 X3 X3 X1 X0
Monitor AD0 ~ AD3 (0 ~ 8000)
95
M1000
Normally o
pen contac
MOV D200 D210
AD 1 Value
MOV D201 D211
AD 2 Value
MOV D202 D212
AD 3 Value
MOV D203 D213
AD 4 Value
Control Out Y
116
M1013
1s clock p
ulse, 0.5s
INCP D100

Control DA Value (0 ~ 4000)
120
M1011
10ms clock
pulse, 5m
INCP K3M200
MOV K4M200 D300
DA 1
DECP K3M220
MOV K4M220 D301
DA 2
137
END

Step 5: Actual testing situation:

I/O testing: When the switch is activated, it can be discovered that the display corresponds to M115–M108. Furthermore, it can be seen that one output point light is added every 1 sec. (the display uses a binary format)

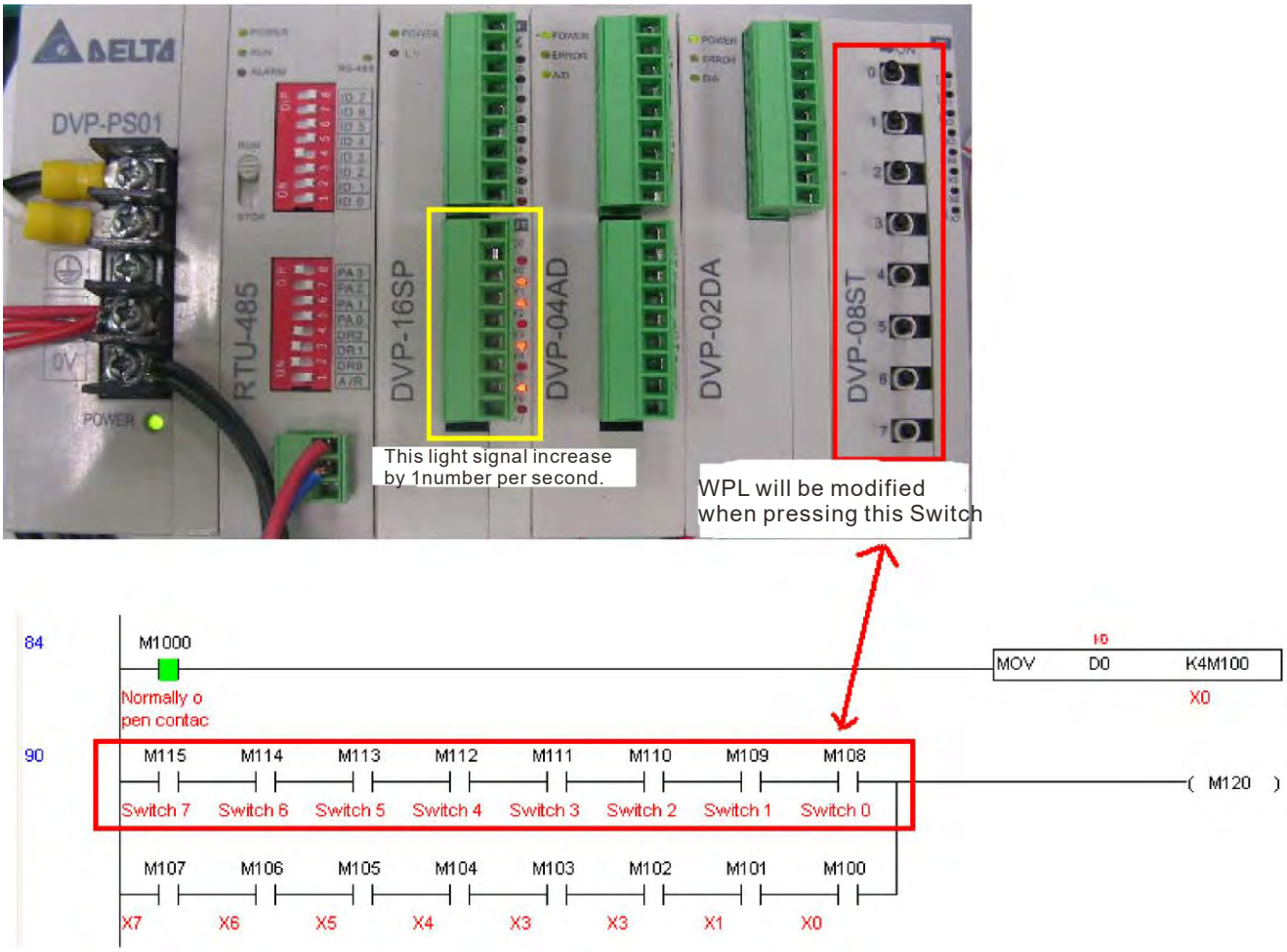

AD DA testing: It can be discovered that D200 and D201 are roughly twice the D300, and continue to increase progressively. For their part, the D202 and D203 are roughly twice the D301, and continue to decrease progressively.

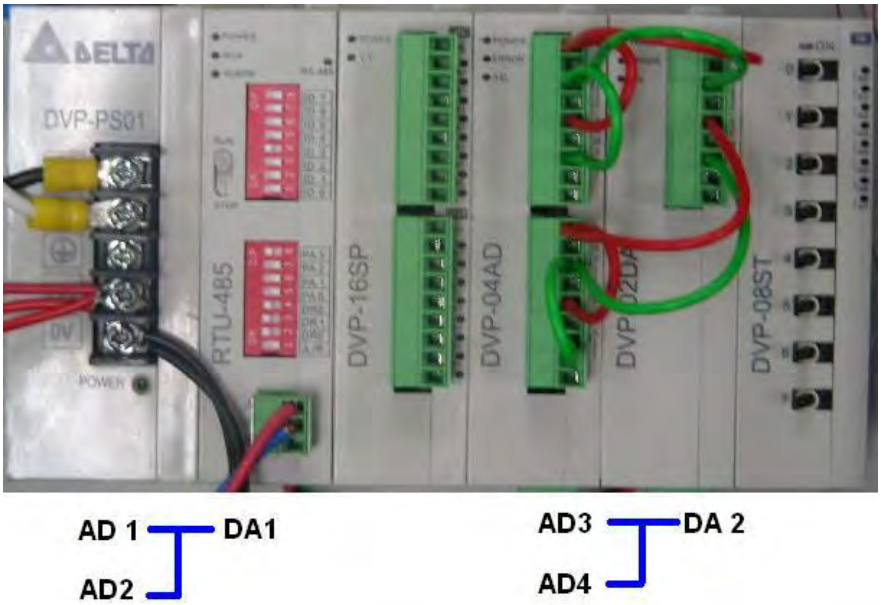

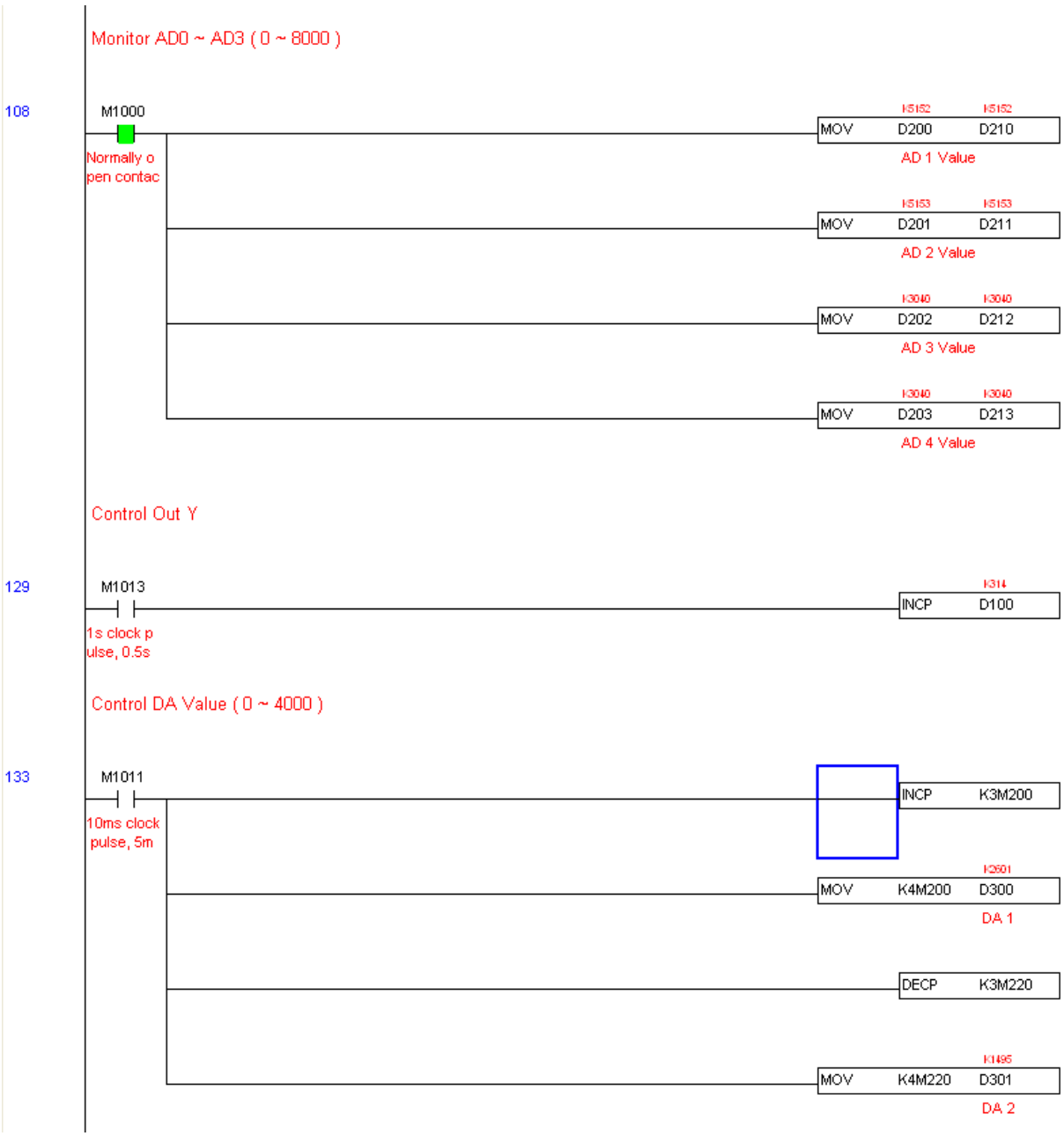
Monitor AD0 ~ AD3 (0 ~ 8000)
108
M1000
Normally o
pen contac
K5152 K5152
MOV D200 D210
AD 1 Value
K5153 K5153
MOV D201 D211
AD 2 Value
K3040 K3040
MOV D202 D212
AD 3 Value
K3040 K3040
MOV D203 D213
AD 4 Value
Control Out Y
129
M1013
1s clock p
ulse, 0.5s
K314
INCP D100
Control DA Value (0 ~ 4000)
133
M1011
10ms clock
pulse, 5m
INCP K3M200
K2601
MOV K4M200 D300
DA 1
DECP K3M220
K1495
MOV K4M220 D301
DA 2

16-13 Calendar Functions

The CH2000's internal PLC includes calendar functions, but these may only be used when a keypad (KPC-CC01) is connected, otherwise the function cannot be used. Currently-supported commands include TCMP (comparison of calendar data), TZCP (calendar data range comparison), TADD (calendar data addition), TSUB (calendar data subtraction), and TRD (calendar reading). Please refer to the explanation of relevant commands and functions for the usage of these commands.
In real applications, the internal PLC can judge whether calendar function have been activated; if they have been activated, calendar warning codes may be displayed in some situations. The basis for whether a calendar function has been activated is whether the program has written the calendar time (D1063 to D1069) in connection with the foregoing calendar commands or programs.

The calendar's time display is currently assigned to D1063 to D1069, and is defined as follows:

Special D	Item	Content	Attributes
D1063	Year (Western)	20xx (2000–2099)	RO
D1064	Weeks	1–7	RO
D1065	Month	1–12	RO
D1066	Day	1–31	RO
D1067	Hour	0–23	RO
D1068	Minute	0–59	RO
D1069	Second	0–59	RO

Calendar-related special M items are defined as follows:

Special D	Item	Attributes
M1068	Calendar time error	RO
M1076	Calendar time error or refresh time out	RO
M1036	Ignore calendar warning	RW

NOTE:

1. When a program writes to the commands TCMP, TZCP, TADD, or TSUB, if it is discovered that a value exceeds the reasonable range, M1026 will be 1.
2. When the keypad display is PLra (RTC correction warning) or PLrt (RTC time out warning), M1076 will be ON.
3. When M1036 is 1, the PLC will ignore the calendar warning.

Calendar trigger warning code is defined as follows:

Warning	Description	Reset Approach	Whether it Affects PLC Operation
PLra	Calendar time correction	Requires power restart	Will not have any effect
PLrt	Calendar time refresh time out	Requires power restart	Will not have any effect

NOTE:

1. When the PLC's calendar functions are operating, if the keypad is replaced with another keypad, it will jump to PLra.
2. When it is discovered at startup that the keypad has not been powered for more than 7 days, or the time is wrong, PLra will be triggered.

3. When it is discovered that the CH2000 has no keypad in 10 sec. after startup, PLrt will be triggered.
4. If the keypad is suddenly pulled out while the calendar is operating normally, and is not reconnected for more than 1 minute, PLrt will be triggered.

Practical applications:

We will perform a demo of simple applications.

We first correct the keypad time. After pressing Menu on the keypad, select the 9th time setting option. After selection, set the current time.

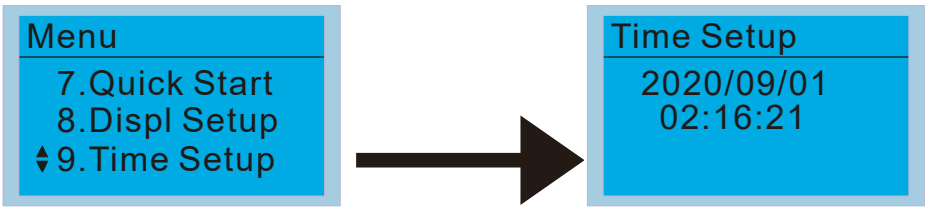

We set converter on during the period of 8:00–17:20, which allows us to write the following example

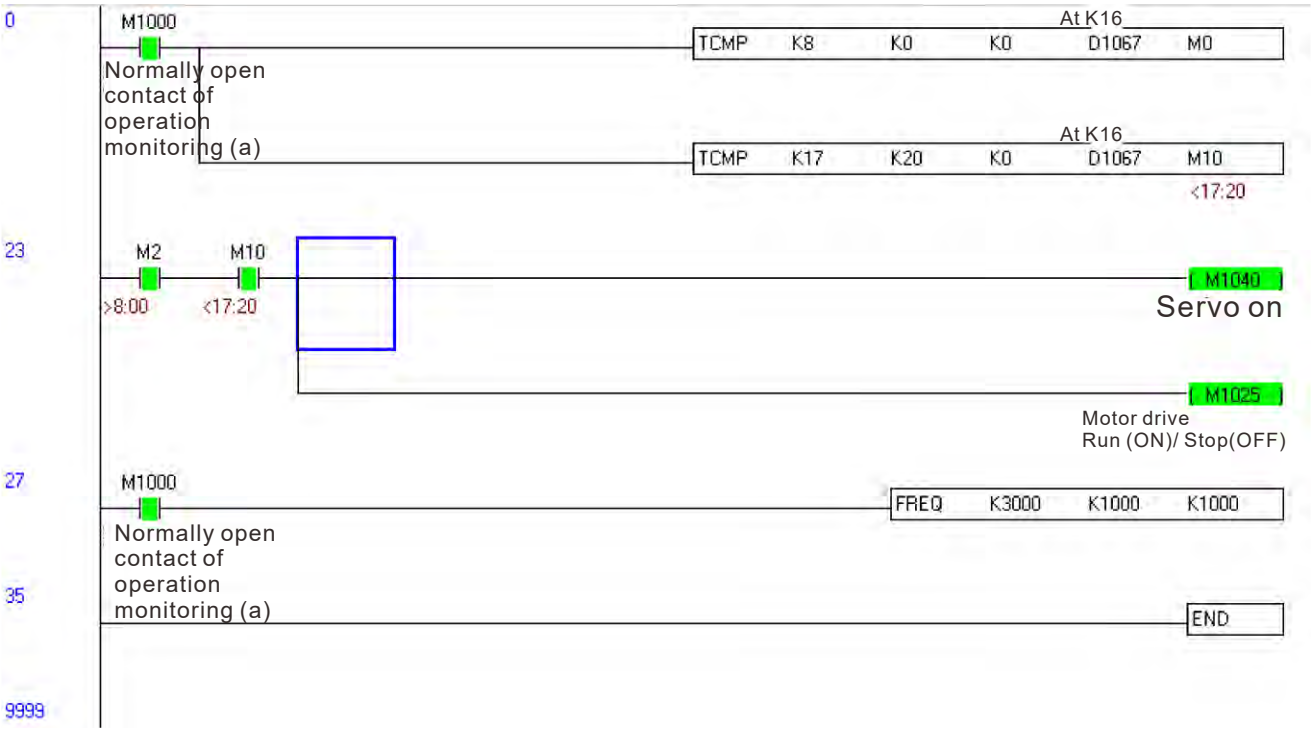

[This page intentionaly left blank]

Chapter 17 Safe Torque Off Function

17-1 The Drive Safety Function Failure Rate

17-2 Safety Torque Off Terminal Function Description

17-3 Wiring Diagram

17-4 Parameters

17-5 Operating Sequence Description

17-6 New Error Code for STO Function

17-1 The Drive Safety Function Failure Rate

Item	Definition	Standard	Performance
SFF	Safe Failure Fraction	IEC61508	Channel 1: 80.08% Channel 2: 68.91%
HFT (Type A subsystem)	Hardware Fault Tolerance	IEC61508	1
SIL	Safety Integrity Level	IEC61508	SIL 2
		IEC62061	SILCL 2
PFH	Average frequency of dangerous failure [h-1]	IEC61508	9.56×10^{-10}
PFD_{av}	Probability of Dangerous Failure on Demand	IEC61508	4.18×10^{-6}
Category	Category	ISO13849-1	Category 3
PL	Performance level	ISO13849-1	d
$MTTF_d$	Mean time to dangerous failure	ISO13849-1	High
DC	Diagnostic coverage	ISO13849-1	Low

17-2 Safety Torque Off Terminal Function Description

The Safe Torque Off function (STO) is to cut off the power supply to motor through the hardware, thereby the motor could not produce torque.
The STO function controls the motor current driving signal through two hardware circuits respectively and thus cut off the inverter power module output in order to achieve the status of safety stop.

Operation principle Description as following table 1:
Table 1: Terminal operation description

Signal	Channel	Photo-coupler Status			
STO signal	STO1–SCM1	ON (High)	ON (High)	OFF (Low)	OFF (Low)
	STO2–SCM2	ON (High)	OFF (Low)	ON (Low)	OFF (Low)
Driver Output status		Ready	STL2 mode (Torque output off)	STL1 mode (Torque output off)	STO mode (Torque output off)

- STO means Safe Torque Off
- STL1–STL3 means Safe Torque Off hardware abnormal.
- STL3 means STO1–SCM1 and STO2–SCM2 internal circuit detected abnormal.
- STO1–SCM1 ON (High): means STO1–SCM1 has connection to a +24 V_{DC} power supply.
- STO2–SCM2 ON (High): means STO2–SCM2 has connection to a +24 V_{DC} power supply.
- STO1–SCM1 OFF (Low): means STO1–SCM1hasn’t connection to a +24 V_{DC} power supply.
- STO2–SCM2 OFF (Low): means STO2–SCM2hasn’t connection to a +24 V_{DC} power supply.

17-3 Wiring Diagram

17-3-1 Internal STO circuit

Internal STO circuit is as below:

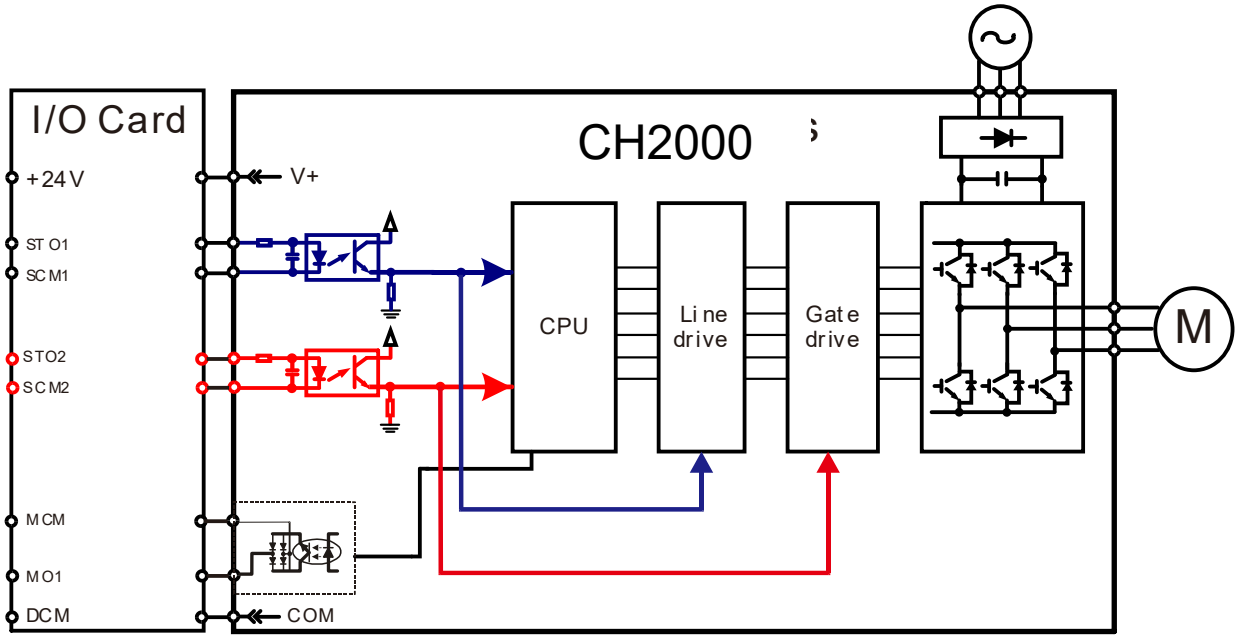

17-3-2 +24V-STO1-STO2 and SCM1-SCM2-DCM

In the figure below, the default setting for +24V-STO1-STO2 and SCM1-SCM2-DCM is short-circuited:

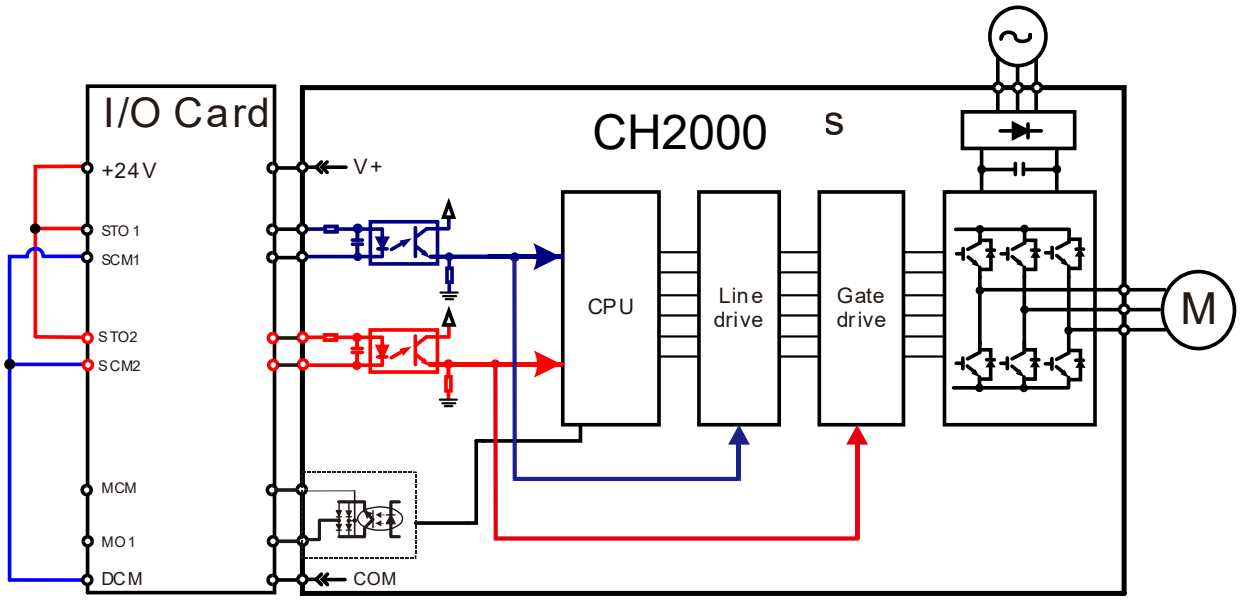

17-3-3 The control loop wiring diagram

1. Remove the short-circuit of +24V-STO1-STO2 and DCM-SCM1-SCM2.
2. The wiring as below diagram. The ESTOP switch must be at Close status in normal situation, and the drive will be able to RUN.
3. STO mode, switch ESTOP open. The drive output stops and keypad displays STO.

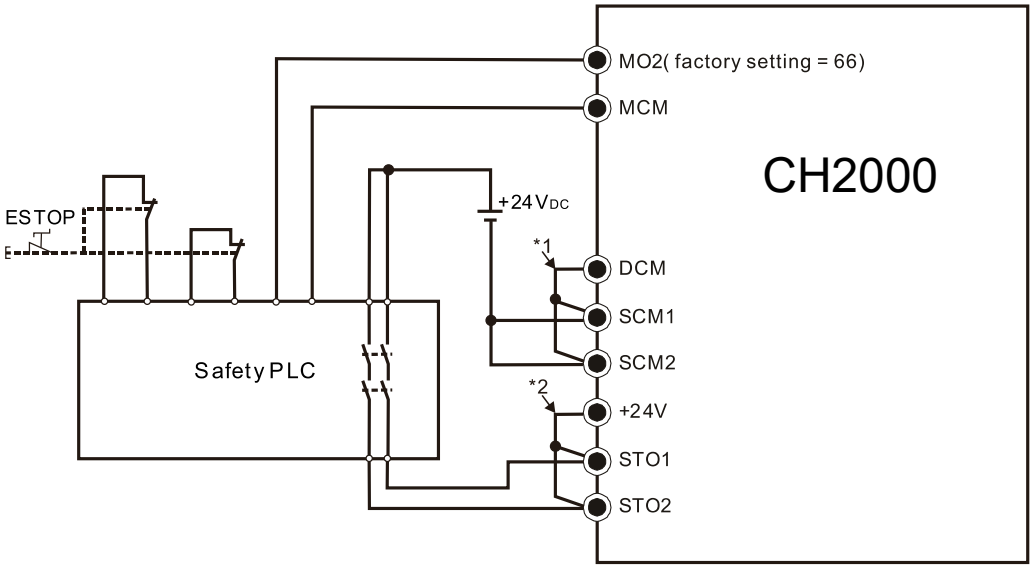

NOTE:

*1. Default short-circuit of DCM-SCM1-SCM2. Remove the short-circuit to use the Safety function.

*2. Default short-circuit of +24V-STO1-STO2. Remove the short-circuit to use the Safety function.

17-4 Parameters

06-44 STO Alarm Latch

Default: 0

Settings 0: STO Alarm Latch
1: STO Alarm no Latch

Pr.06-44 = 0 STO Alarm Latch: after the reason of STO Alarm is cleared, a Reset command is needed to clear the STO Alarm.

Pr.06-44 = 1 STO Alarm no Latch: after the reason of STO Alarm is cleared, the STO Alarm will be cleared automatically.

The STL1–STL3 error are all “Alarm latch” mode (in STL1–STL3 mode, the Pr.06-44 function is no effective).

02-13 Multi-function Output 1 (Relay 1)

Default: 11

02-14 Multi-function Output 2 (Relay 2)

Default: 1

02-16 Multi-function Output 3 (MO1)

Default: 0

02-17 Multi-function Output 4 (MO2)

Default: 66

Settings 66: SO N.O. output
68: SO N.C. output

Settings	Functions	Descriptions
66	SO Logic A output	Safety Output Normal Open
68	SO Logic B output	Safety Output Normal Close

CH2000 default setting Pr.02-17 (MO2) = 66 (N.O.) and multi-function output setting adds two new functions: 66 and 68.

Drive Status	Safety Output Status	
	N.O. (MO = 66)	N.C. (MO = 68)
Normal run	Open	Close
STO	Close	Open
STL1–STL3	Close	Open

00-04 Content of Multi-function Display

Default: 3

Settings 45: Hardware version

17-5 Operating Sequence Description

17-5-1 Normal operation Status

As shown in Figure 3: When the STO1–SCM1 and STO2–SCM2=ON (no STO function is needed), the drive will execute “Operating” or “Output Stop” according to RUN/STOP command.

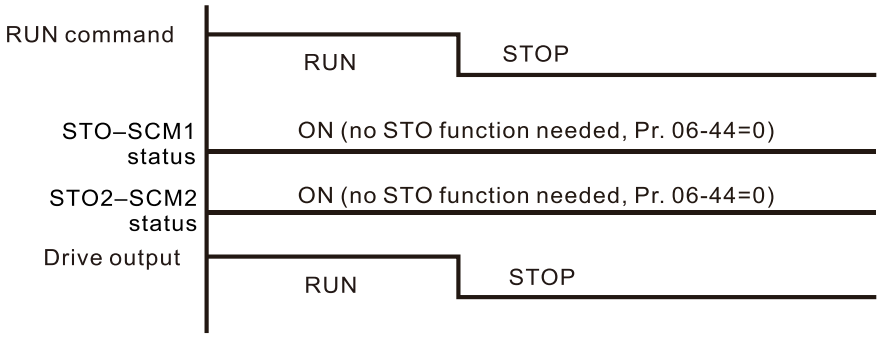

Figure 3

17-5-2 STO

17-5-2-1 STO, Pr.06-44 = 0, Pr.02-35 = 0

As shown in Figure 4: When both of STO1–SCM1 and STO2–SCM2 channel has turned off during operating, the STO function enabling and the drive will stop output regardless of Run command is ON or OFF status.

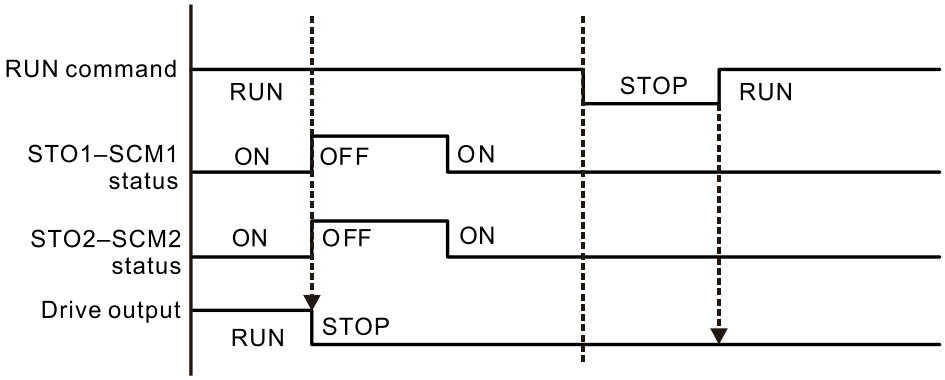

Figure 4

17-5-2-2 STO, Pr.06-44 = 0, Pr.02-35 = 1

As shown in Figure 5: As same as the figure 4. Because the Pr.02-35 = 1, after the Reset command, if the operating command still exists, then the drive will immediately execute the run command again.

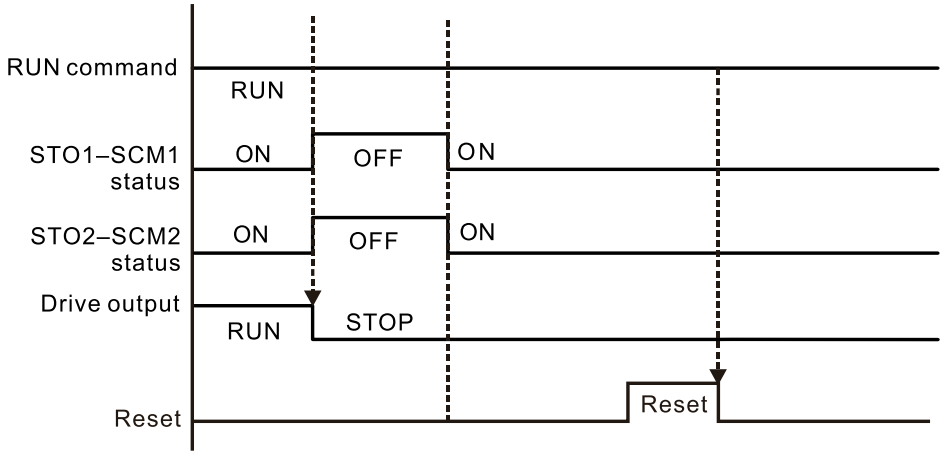

Figure 5

17-5-3 STO, Pr.06-44 = 1

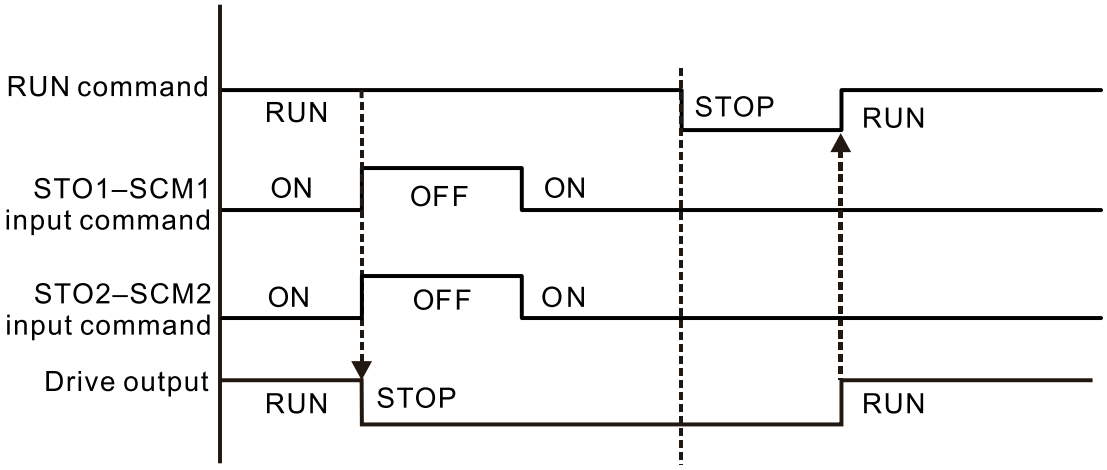

Figure 6

17-5-4 STL1

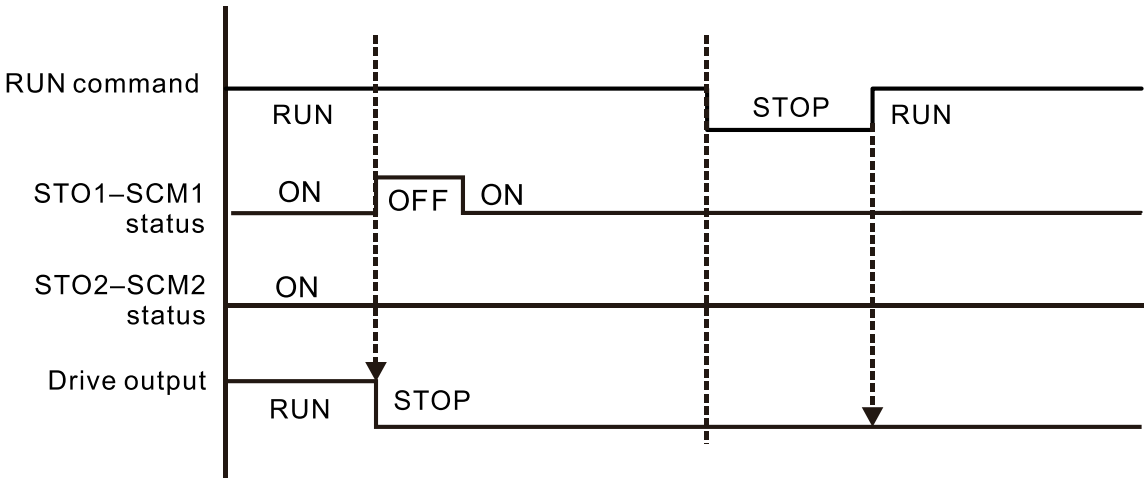

Figure 7

17-5-5 STL2

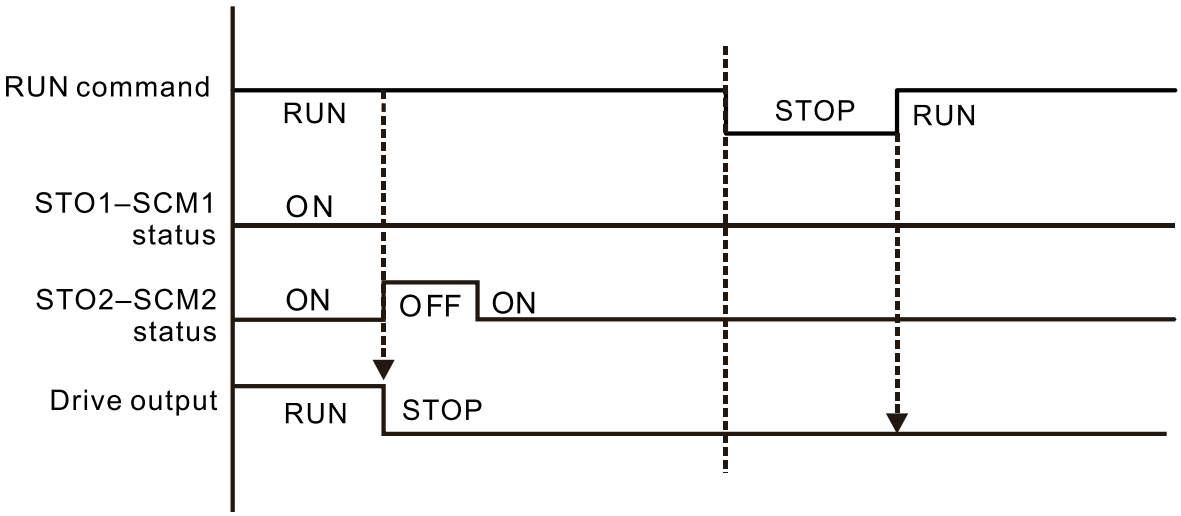

Figure 8

17-6 New Error Code for STO Function

06-17	Fault Record 1
06-18	Fault Record 2
06-19	Fault Record 3
06-20	Fault Record 4
06-21	Fault Record 5
06-22	Fault Record 6

Settings

72: Channel 1 (STO–SCM1) internal hardware error

76: STO (Safe Torque Off)

77: Channel 2 (STO2–SCM2) internal hardware error

78: Channel 1 and Channel 2 internal hardware error

Error Code	Name	Description
76 (STO)	STO	Safe Torque Off function active
72 (STL1)	STL1 (STO1–SCM1)	STO1–SCM1 internal hardware detect error
77 (STL2)	STL2 (STO2–SCM2)	STO2–SCM2 internal hardware detect error
78 (STL3)	STL3	STO1–SCM1 and STO2–SCM2 internal hardware detect error

The old / new control board and old / new I/O card:

CH2000	v1.12 firmware	v1.20 firmware
v1.12 control board + old I/O card (no STO function)	OK	OK
v1.12 control board + new I/O card (with STO function)	Error	Error
v1.20 control board + old I/O card (no STO function)	Error	Error
v1.20 control board + new I/O card (with STO function)	Error	OK

[This page intentionally left blank]

Appendix A. Modbus Protocol

A-1 Code Description

A-2 Data Format

A-3 Communication Protocol

A-4 Address List

A-5 Exception Response

- This appendix helps users to control by computers and monitor drive parameters and status through Modbus by using RS-485 serial communication interface
- When using the communication interface, the diagram on the right shows the communication port pin definitions. It is recommended that you connect the AC motor drive to your PC by using Delta IFD6530 or IFD6500 as a communication converter.

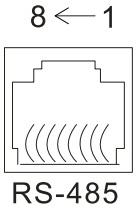

Modbus RS-485
Pin 1–2,7,8: Reserved
Pin 3, 6: SGND
Pin 4: SG-
Pin 5: SG+

- The default communication formats for communication port:
  1. Modbus ASCII mode
  2. 9600 bps bps serial communication baud rates
  3. 7-bit data character
  4. No calibration
  5. 2 stop bit
- Modbus ASCII (American Standard Code for Information Interchange): Each byte of data is the combination of two ASCII characters. For example, one byte of data: 64 Hex, shown as ‘64’ in ASCII, consists of ‘6’ (36Hex) and ‘4’ (34Hex)

A-1 Code description

The communication protocol is in hexadecimal, ASCII: “0”…“9”, “A”…“F”, every hexadecimal value represents an ASCII code. The following table shows some examples.

Character	‘0’	‘1’	‘2’	‘3’	‘4’	‘5’	‘6’	‘7’
ASCII code	30H	31H	32H	33H	34H	35H	36H	37H

Character	‘8’	‘9’	‘A’	‘B’	‘C’	‘D’	‘E’	‘F’
ASCII code	38H	39H	41H	42H	43H	44H	45H	46H

A-2 Data format

10-bit character frame (For ASCII):

(7, N, 2)

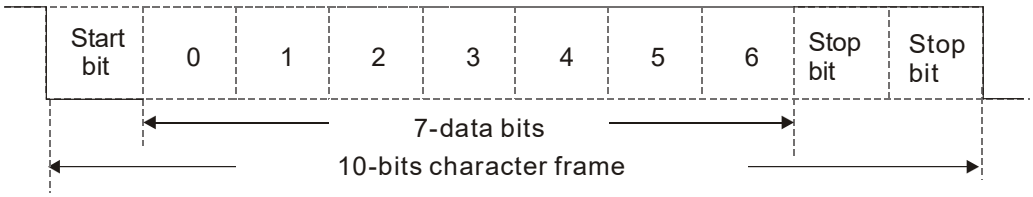

(7, E, 1)

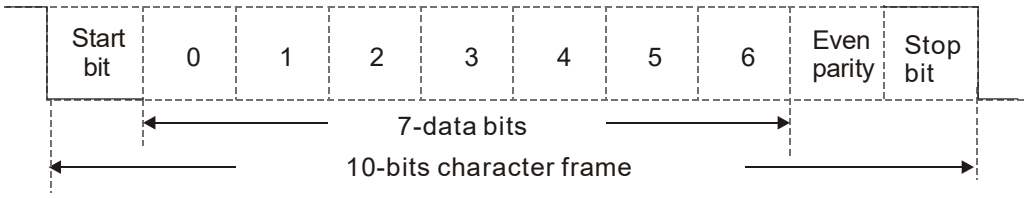

(7, O, 1)

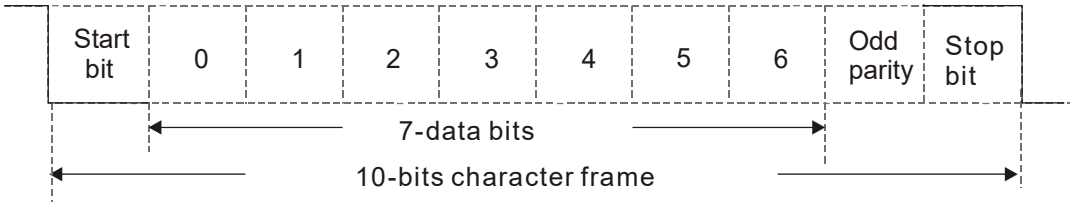

11-bit character frame (For RTU):

(8, N, 2)

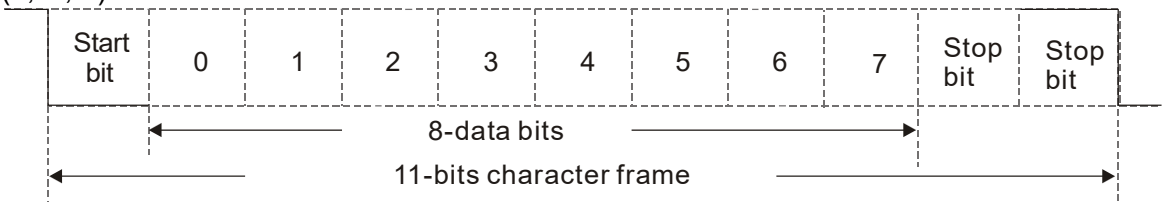

(8, E, 1)

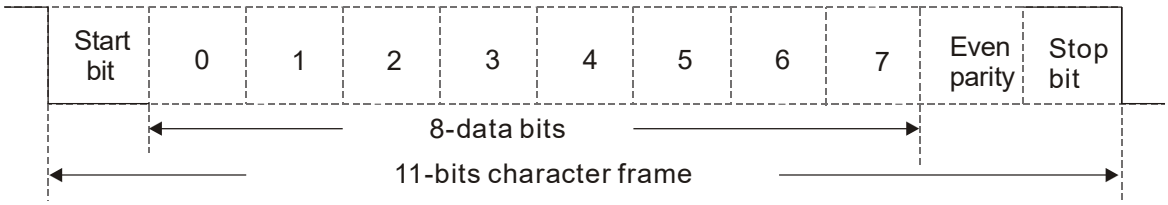

(8, O, 1)

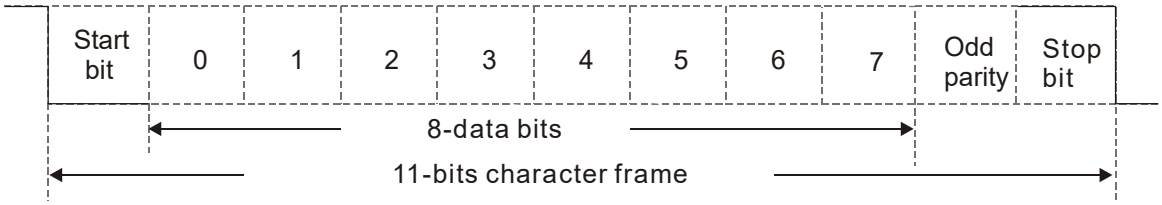

A-3 Communication Protocol

1. Communication data frame

ASCII mode:

STX	Start character = ':' (3AH)
Address High	Communication address:
Address Low	one 8-bit address consists of 2 ASCII codes
Function High	Command code:
Function Low	one 8-bit command consists of 2 ASCII codes
DATA (n-1)	Contents of data:
…….	n x 8-bit data consists of 2n ASCII codes
DATA 0	n ≤ 16, maximum of 32 ASCII codes (20 sets of data)
LRC Check High	LRC checksum:
LRC Check Low	one 8-bit checksum consists of 2 ASCII codes
END High	End characters:
END Low	END1= CR (0DH), END0= LF(0AH)

RTU mode:

START	Defined by a silent interval of larger than / equal to 3.5 char
Address	Communication address: 8-bit binary address
Function	Command code: 8-bit binary command
DATA (n-1)	Contents of data: N × 8-bit data, n ≤ 16
…….	
DATA 0	
CRC Check Low	CRC checksum: one 16-bit CRC checksum consists of 2 8-bit binary characters
CRC Check High	
END	Defined by a silent interval of larger than / equal to 10 ms

2. Communication address (Address)

00H: broadcast to all AC motor drives

01H: AC motor drive of address 01

0FH: AC motor drive of address 15

10H: AC motor drive of address 16

:

FEH: AC motor drive of address 254

Function (function code) and data (data characters)

03H: read data from a register

Example: Reading two continuous data from register address 2102H, AMD address is 01H.

ASCII mode:

Command Message

STX	‘:’
Address	‘0’
	‘1’
Function	‘0’
	‘3’
Starting register	‘2’
	‘1’
	‘0’
	‘2’
Number of register (count by word)	‘0’
	‘0’
	‘0’
	‘2’
LRC Check	‘D’
	‘7’
END	CR
	LF

Response Message

STX	‘:’
Address	‘0’
	‘1’
Function	‘0’
	‘3’
Number of register (count by byte)	‘0’
	‘4’
Content of starting register 2102H	‘1’
	‘7’
	‘7’
	‘0’
Content of register 2103H	‘0’
	‘0’
	‘0’
	‘0’
LRC Check	‘7’
	‘1’
END	CR
	LF

RTU mode:

Command Message

Address	01H
Function	03H
Starting data register	21H
	02H
Number of register (count by word)	00H
	02H
CRC Check Low	6FH
CRC Check High	F7H

Response Message

Address	01H
Function	03H
Number of register (count by byte)	04H
Content of register address 2102H	17H
	70H
Content of register address 2103H	00H
	00H
CRC Check Low	FEH
CRC Check High	5CH

3. 06H: single write, write single data to a register.

Example: Writing data 6000 (1770H) to register 0100H. AMD address is 01H.

ASCII mode:

Command Message

STX	':'
Address	'0'
	'1'
Function	'0'
	'6'
Target register	'0'
	'1'
	'0'
	'0'
Register content	'1'
	'7'
	'7'
	'0'
LRC Check	'7'
	'1'
END	CR
	LF

Response Message

STX	':'
Address	'0'
	'1'
Function	'0'
	'6'
Target register	'0'
	'1'
	'0'
	'0'
Register content	'1'
	'7'
	'7'
	'0'
LRC Check	'7'
	'1'
END	CR
	LF

RTU mode:

Command Message

Address	01H
Function	06H
Target register	01H
	00H
Register content	17H
	70H
CRC Check Low	86H
CRC Check High	22H

Response Message

Address	01H
Function	06H
Target register	01H
	00H
Register content	17H
	70H
CRC Check Low	86H
CRC Check High	22H

4. 10H: write multiple registers (can write at most 20 sets of data simultaneously).
   Example: Set the multi-step speed of an AC motor drive (address is 01H),
   Pr.04-00 = 50.00 (1388H), Pr.04-01 = 40.00 (0FA0H.)

ASCII mode:

Command Message

STX	':'
ADR 1	'0'
ADR 0	'1'
CMD 1	'1'
CMD 0	'0'
Target register	'0'
	'4'
	'0'
	'0'
Number of register (count by word)	'0'
	'0'
	'0'
	'2'
Number of register (count by byte)	'0'
	'4'
The first data content	'1'
	'3'
	'8'
	'8'
The second data content	'0'
	'F'
	'A'
	'0'
LRC Check	'9'
	'A'
END	CR
	LF

Response Message

STX	':'
ADR 1	'0'
ADR 0	'1'
CMD 1	'1'
CMD 0	'0'
Target register	'0'
	'4'
	'0'
	'0'
Number of register (count by word)	'0'
	'0'
	'0'
	'2'
LRC Check	'E'
	'8'
END	CR
	LF

RTU mode:

Command Message

ADR	01H
CMD	10H
Target register	04H
	00H
Number of register (Count by word)	00H
	02H
Quantity of data (byte)	04
The first data content	13H
	88H
The second data content	0FH
	A0H
CRC Check Low	'9'
CRC Check High	'A'

Response Message

ADR	01H
CMD	10H
Target register	04H
	00H
Number of register (Count by word)	00H
	02H
CRC Check Low	41H
CRC Check High	04H

5. Checksum
   1. ASCII mode (LRC Check):
      LRC (Longitudinal Redundancy Check) is calculated by summing up the values of the bytes from ADR1 to last data character then calculating the hexadecimal representation of the 2's-complement negation of the sum.
      Example:
      01H + 03H + 21H + 02H + 00H + 02H = 29H, the 2's-complement negation of 29H is D7H.
   2. RTU mode (CRC Check):
      CRC (Cyclical Redundancy Check) is calculated by the following steps:
      Step 1: Load a 16-bit register (called CRC register) with FFFFh.
      Step 2: Exclusive OR the first 8-bit byte of the command message with the low order byte of the 16-bit CRC register, putting the result in the CRC register.
      Step 3: Examine the LSB of CRC register.
      Step 4: If the LSB of CRC register is 0, shift the CRC register one bit to the right, fill MSB with zero, then repeat step 3. If the LSB of CRC register is 1, shift the CRC register one bit to the right, fill MSB with zero, Exclusive OR the CRC register with the polynomial value A001H, then repeat step 3.
      Step 5: Repeat step 3 and 4 until you perform eight shifts. This processes a complete 8-bit byte.
      Step 6: Repeat step 2 through 5 for the next 8-bit byte of the command message. Continue doing this until all bytes are processed. The final contents of the CRC register are the CRC value. When transmitting the CRC value in the message, the upper and lower bytes of the CRC value must be swapped, that is, the lower order byte is transmitted first.
6. The following is an example of CRC generation using C language.

Unsigned char* data ← a pointer to the message buffer

Unsigned char length ← the quantity of bytes in the message buffer

```
unsigned int crc_chk(unsigned char* data, unsigned char length)
 {
        int j;
        unsigned int reg_crc=0xffff;
        while(length--){
              reg_crc ^= *data++;
              for(j=0;j<8;j++){
                    if(reg_crc & 0x01){   /* LSB(b0)=1 */
                          reg_crc=(reg_crc>>1) ^ 0xa001;
                    }else{
                          reg_crc=reg_crc >>1;
                    }
              }
        }
        return reg_crc;                    // return register CRC
  }
```

A-4 Address list

1. ASCII
   (1) Reads one or more parameter values: 3Ah (start bit‘ : ’) + 30h 31h (station address 01) + 30h 33h (function code 03h) + 30h 30h xxh xxh–32h 36h xxh xxh (Modbus address 00xxh–26xxh) + xxh xxh xxh xxh (reading length 1) + LRC (checksum) + CR/LF
   (2) Writes one parameter value: 3Ah (start bit‘ : ’) + 30h 31h (station address 01) + 30h 36h (function code 06h) + 30h 30h xxh xxh–32h 36h xxh xxh(Modbus address 00xxh–26xxh) + xxh xxh xxh xxh (writing value) + LRC (checksum) + CR/LF
   (3) Writes 20 parameter values: 3Ah (start bit‘ : ’) + 30h 31h (station address 01) + 31h 30h (function code 10h) + 30h 30h xxh xxh–32h 36h xxh xxh (Modbus address 00xxh–26xxh) + 30h 30h 31h 34h (word data length) + 32h 38h (byte data length) + xxh xxh xxh xxh (the first writing value) + ... + xxh xxh xxh xxh (the 20th writing value) + LRC (checksum) + CR/LF
2. RTU
   (1) Reads one or more parameter values: 01h (station address 01) + 03h (function code 03h) + 00xxh–26xxh (Modbus address) + xxxxh (reading length) + CRC (checksum)
   (2) Writes one parameter value: 01h (station address 01) + 06h (function code 06h) + 00xxh–26xxh (Modbus address) + xxxxh (writing value) + CRC (checksum)
   (3) Writes 20 parameter values: 01h (station address 01) + 10h (function code 10h) + 00xxh–26xxh (Modbus address) + 0014h (data length, count by word) + 28h (data length, count by byte) + xxxxh (the first writing value) + ... + xxxxh (the 20th writing value) + CRC (checksum)

3. AC motor drive parameters (GGnnH): communication station address is Pr.09-00 setting value

Modbus Address	Attribute (Function Code)	Description
GGnnH	R(03H) / W(06H, 10H)	GG means parameter group, nn means parameter number. For example, the Modbus address of Pr.04-10 is 040AH when reading by Delta VFDsoft.

4. Control command (20xx): communication station address is Pr.09-00 setting value

Function Name	Modbus Address	Attribute (Function Code)	Size	Description		
Operation command	2000H	R (03H) / W (06H, 10H)	U16	bit1–0	00B: No function	1. Remains the status specified by a first command until a second command is received. 2. Valid only when operation command source is set to communication (Pr.00-03=2).
					01B: Stop	
					10B: Run	
					11B: JOG + Run	
			U16	bit3–2	Reserved	
				bit5–4	00B: No function	
					01B: FWD	
					10B: REV	
					11B: Change direction	
				bit7–6	00B: 1st accel. / decel.	1. Valid only when 2000h bit12 is set to 1. 2. Obtain the current running speed by reading 2107h.
					01B: 2nd accel. / decel.	
					10B: 3rd accel. / decel.	
					11B: 4th accel. / decel.	
				bit11–8	0000B: zero step speed	

Function Name	Modbus Address	Attribute (Function Code)	Size	Description		
					0001B: 1st step speed	
					0010B: 2nd step speed	
					0011B: 3rd step speed	
					0100B: 4th step speed	
					0101B: 5th step speed	
					0110B: 6th step speed	
					0111B: 7th step speed	
					1000B: 8th step speed	
					1001B: 9th step speed	
					1010B: 10th step speed	
					1011B: 11th step speed	
					1100B: 12th step speed	
					1101B: 13th step speed	
					1110B: 14th step speed	
					1111B: 15th step speed	
				bit12	1: Enable bit06–11 function	
				bit15–13	Reserved	
Frequency command	2001H	R (03H) / W (06H, 10H)		Frequency command (XXX.XX Hz). There are two decimal places for general-purpose drives.		
Fault / control command source	2002H	R (03H) / W (06H, 10H)		bit0	1: External Fault (E.F.) ON	To trigger an external fault to the drive to make it stop running. Drive's stop method can be set through drive parameters.
				bit1	1: Reset	To clear the fault status
				bit2	1: Base block (B.B) ON	To trigger an external base block to the drive to suspend the operation. When bit = 0 and clear BB situation, the drive returns to the previous operation.
				bit15–3	Reserved	

5. Status monitor read only (21xx): communication station address is Pr.09-00 setting value

Function Name	Modbus Address	Attribute (Function Code)	Size	Description
Fault status	2100H	R(03H)	U16	bit7–0: Fault code bit15–8: Warning code

Function Name	Modbus Address	Attribute (Function Code)	Size	Description	
Drive operation status	2101H	R(03H)	U16	bit1–0	Status of RUN / STOP 00B: Drive fully stops (RUN indicator is OFF / STOP indicator is ON) 01B: Drive is stopping (RUN indicator flashes / STOP indicator is ON) 10B: Drive is in standby status (RUN indicator is ON / STOP indicator flashes) 11B: Drive is running (RUN indicator is ON / STOP indicator is OFF)
				bit2	1: JOG command
				bit4–3	Operation direction 00B: FWD (REV indicator is OFF / FWD indicator is ON) 01B: from REV to FWD (REV indicator flashes / FWD indicator is ON) 10B: from FWD to REV (REV indicator is ON / FWD indicator flashes) 11B: REV (REV indicator is ON / FWD indicator is OFF)
				bit7	Reserve
				bit8	1: Master frequency controlled by communication interface
				bit9	1: Master frequency controlled by analog / external terminal signal
				bit10	1: Operation command controlled by communication interface
				bit11	1: Parameter locked
				bit12	Reserved
				bit15–13	The status of HOA and LOC / REM 000b (0): HOA mode OFF 001b (1): HOA mode HAND-ON 010b (2): HOA mode AUTO-ON 011b (3): LOC/REM mode LOC-ON 100b (4): LOC/REM mode REM-ON
Frequency command	2102H	R(03H)		Drive's frequency command (XXX.XX Hz) 1: Speed mode→Speed command 2: Torque mode→Speed limit	

Function Name	Modbus Address	Attribute (Function Code)	Size	Description
Output frequency	2103H	R(03H)		Drive's output frequency (XXX.XX Hz)
Output current	2104H	R(03H)		Drive's output current (XX.XX A). Decimal places can be referred by the high byte of 211F
DC bus voltage	2105H	R(03H)	U16	Drive's DC bus voltage (XXX.X V)
Output voltage	2106H	R(03H)		Drive's output voltage (XXX.X V)
Multi-step speed status	2107H	R(03H)		Drive's current running speed step given by multi-step speed command (0 is main speed)
Counter value	2109H	R(03H)		The present value of MI
Output power factor angle	210AH	R(03H)		Drive's output power factor angle (XXX.X°) (0.0–180.0°)
Output torque	210BH	R(03H)		Output torque (XXX.X %)
Motor actual speed	210CH	R(03H)		Actual motor speed (XXXXX rpm)
Number of PG feedback pulses	210DH	R(03H)		Number of PG feedback pulses (0~65535)
Number of pulse commands	210EH	R(03H)		Number of PG2 pulse commands (0~65535)
Power output	210FH	R(03H)		Drive's output power (X.XXX kW)
Multi-function display	2116H	R(03H)		Display the low word value (Pr.00-04) of user-defined items, the value is low 16 bits data.

Function Name	Modbus Address	Attribute (Function Code)	Size	Description
Maximum user-defined value	211BH	R(03H)		Maximum Operation Frequency (Pr.01-00) or Maximum User-defined Value (Pr.00-26) ● When Pr.00-26 is 0, this value is equal to Pr.01-00 setting ● When Pr.00-26 is not 0, and the command source is keypad, this value = Pr.00-24 × Pr.00-26 / Pr.01-00 ● When Pr.00-26 is not 0, and the command source is 485, this value = Pr.09-10 × Pr.00-26 / Pr.01-00
Keypad output current display (A page) attribute	211FH	R(03H)	U16	bit7–0: Reserve bit9–8: Decimal point of A page bit15–10: Reserve

6. Status monitor read only (22xx): communication station address is Pr.09-00 setting value

Function Name	Modbus Address	Attribute (Function Code)	Size	Description
Output current	2200H	R(03H)	U16	Display output current (A). When current is higher than 655.35, it shifts the decimal as (XXX.X A). The decimal can refer to High byte of 211F.
Counter value	2201H	R(03H)		Display counter value (c)
Output frequency	2202H	R(03H)		Actual output frequency (XXXXX Hz)
DC bus voltage	2203H	R(03H)		DC bus voltage (XXX.X V)
Output voltage	2204H	R(03H)		Output voltage (XXX.X V)
Power factor angle	2205H	R(03H)		Power angle (XXX.X)
Power output	2206H	R(03H)		Display actual motor speed kW of U, V, W (XXXX.X kW)
Motor actual speed	2207H	R(03H)		Display motor speed in rpm estimated by the drive or encoder feedback (XXXXX rpm)
Output torque	2208H	R(03H)		Display positive/negative output torque in %, estimated by the drive (t0.0: positive torque, -0.0: negative torque) (XXX.X %)
Feedback position	2209H	R(03H)		Display PG feedback (see NOTE 1 in Pr.00-04)
PID feedback value	220AH	R(03H)		PID feedback value after enabling PID function (XXX.XX %)

Function Name	Modbus Address	Attribute (Function Code)	Size	Description
AVI analog input	220BH	R(03H)		Display signal of AVI analog input terminal, 0–10 V corresponds to 0.00–100.00% (1.) (see NOTE 2 in Pr.00-04)
ACI analog input	220CH	R(03H)		Display signal of ACI analog input terminal, 4–20 mA / 0–10 V corresponds to 0.00–100.00% (2.) (see NOTE 2 in Pr.00-04)
AUI analog input	220DH	R(03H)		Display signal of AUI analog input terminal, -10 V–10 V corresponds to -100.00–100% (3.) (see NOTE 2 in Pr.00-04)
IGBT temperature	220EH	R(03H)		IGBT temperature of drive power module (XXX.XºC)
Drive capacitance temperature	220FH	R(03H)		The temperature of capacitance (XXX.XºC)
Digital input status	2210H	R(03H)		The status of digital input (ON/OFF), refer to Pr.02-12 (see NOTE 3 in Pr.00-04)
Digital output status	2211H	R(03H)		The status of digital output (ON/OFF), refer to Pr.02-18 (see NOTE 4 in Pr.00-04)
Multi-step speed	2212H	R(03H)		The multi-step speed that is executing (S)
The co-rresponding CPU pin status of digital input	2213H	R(03H)		The corresponding CPU pin status of digital input (d.) (see NOTE 3 in Pr.00-04)
The co-rresponding CPU pin status of digital output	2214H	R(03H)		The corresponding CPU pin status of digital output (O.) (see NOTE 4 in Pr.00-04)
Actual motor position	2215H	R(03H)	U16	Number of actual motor revolution (PG1 of PG card) (P.) it starts from 9 when the actual operation direction is changed or the keypad displays at stop is 0. The maximum is 65535
Pulse input frequency	2216H	R(03H)		Pulse input frequency (PG2 of PG card) (XXX.XX Hz)
Pulse input position	2217H	R(03H)		Pulse input position (PG card PG2), the maximum setting is 65535.
Tracing error of pulse command in position control	2218H	R(03H)		Position command tracing error
Overload counter	2219H	R(03H)		Display times of counter overload (XXX.XX %)
GFF	221AH	R(03H)		GFF (XXX.XX%)

Function Name	Modbus Address	Attribute (Function Code)	Size	Description	
DC bus voltage ripples	221BH	R(03H)		DCBUS voltage ripples (XXX.X V)	
PLC register	221CH	R(03H)		PLC register D1043 data (C)	
Magnetic pole zone	221DH	R(03H)		Number of poles of a permanent magnet motor	
Display of user-defined output	221EH	R(03H)		User page displays the value in physical measure	
Pr.00-05 gain value	221FH	R(03H)		Output frequency × Pr.00-05 (XXX.XX Hz)	
Number of motor runs	2220H	R(03H)		Number of motor runs when drive operates (saves when drive stops, and resets to zero when operating)	
Operating position of the motor	2221H	R(03H)		Operating position of the motor (saves when drive stops, and resets to zero when operating)	
Running speed of fan	2222H	R(03H)		Fan speed of the drive (XXX%)	
Control mode	2223H	R(03H)		Control mode of the drive 0: speed mode 1: torque mode	
Frequency of carrier wave	2224H	R(03H)		Carrier frequency of the drive (XX kHz)	
Drive status	2226H	R(03H)	U16	Drive status	
				bit1~0	00b: No direction 01b: Forward 10b: Reverse
				bit3~2	01b: Drive ready 10b: Error
				bit4	0b: Motor drive did not output 1b: Motor drive did output
				bit5	0b: No alarm 1b: Alarm
Positive / negative torque	2227H	R(03H)		Drive's estimated output torque (positive or negative direction) (XXXX Nt-m)	
Torque command	2228H	R(03H)		Torque command (XXX.X%)	
kWh	2229H	R(03H)		kWh display (XXXX.X)	
PG2 pulse input (L)	222AH	R(03H)		PG2 pulse input in Low Word	

Function Name	Modbus Address	Attribute (Function Code)	Size	Description
PG2 pulse input (H)	222BH	R(03H)		PG2 pulse input in High Word
Motor actual position (L)	222CH	R(03H)		Motor actual position in Low Word
Motor actual position (H)	222DH	R(03H)		Motor actual position in High Word
PID reference	222EH	R(03H)		PID reference (XXX.XX%)
PID offset	222FH	R(03H)		PID offset (XXX.XX%)
PID output frequency	2230H	R(03H)		PID output frequency (XXX.XX Hz)
Hardware ID of control board	2231H	R(03H)		Hardware ID
Auxiliary frequency	2232H	R(03H)		Display the value of auxiliary frequency (XXX.XX Hz)
Master frequency	2233H	R(03H)		Display the value of master frequency (XXX.XX Hz)
Frequency after addition and subtraction of master and auxiliary frequencies	2234H	R(03H)		Display the frequency value after addition and subtraction of master and auxiliary frequencies (XXX.XX Hz)
Motor temperature	2235H	R(03H)		Display the motor temperature (only supports KTY84-130) (XX.X°C)
PM back EMF	223FH	R(03H)		Estimated Ke value (V/Krpm)
d-axis current command	224AH	R(03H)	U16	Id Reference (XXX.XX A)
q-axis current command	224BH	R(03H)		Iq Reference (XXX.XX A)
d-axis current feedback	224CH	R(03H)		Id feedback value (XXX.XX A)
q-axis current feedback	224DH	R(03H)		Iq feedback value (XXX.XX A)

7. Remote IO (26xx): communication station address is Pr.09-00 setting value

Function Name	Modbus Address	Attribute (Function Code)	Size	Description
Digital input terminal MI16–MI1 status	2600H	R(03H)	U16	AUI proportional value
Digital output terminal MI16–MI1 status	2640H	R(03H) / W(06H, 10H)		Extension card AI10, 0.0–100.0% (EMC-A22A)
AVI proportional value	2660H	R(03H)		Extension card AI11, 0.0–100.0% (EMC-A22A)
ACI proportional value	2661H	R(03H)		AFM1 output proportional value
AUI proportional value	2662H	R(03H)		AFM2 output proportional value
Percentage of analog input signal AI10	266AH	R(03H)		Extension card AO10, 0.0–100.0% (EMC-A22A)
Percentage of analog input signal AI11	266BH	R(03H)		Extension card AO11, 0.0–100.0% (EMC-A22A)
AFM1 output proportional value	26A0H	R(03H) / W(06H, 10H)		AUI proportional value
AFM2 output proportional value	26A1H	R(03H) / W(06H, 10H)	U16	Extension card AI10, 0.0–100.0% (EMC-A22A)
Percentage of analog output signal AI10	26AAH	R(03H) / W(06H, 10H)		Extension card AI11, 0.0–100.0% (EMC-A22A)
Percentage of analog output signal AI11	26ABH	R(03H) / W(06H, 10H)		AFM1 output proportional value

A-5 Exception response

When the drive is using the communication connection, if an error occurs, the drive responds to the error code and sets the highest bit (bit 7) of the command code to 1 (function code AND 80H) then responds to the control system to signal that an error occurred.

If the keypad displays “CE-XX” as a warning message, “XX” is the error code at that time. Refer to the table of error codes for communication error for reference.

ASCII mode

STX	‘:’
Address	‘0’
	‘1’
Function	‘8’
	‘6’
Exception code	‘0’
	‘2’
LRC Check	‘7’
	‘7’
END	CR
	LF

RTU mode

Address	01H
Function	86H
Exception code	02H
CRC Check Low	C3H
CRC Check High	A1H

The explanation of exception codes:

Error code	Explanation
1	Function code is not supported or unrecognized.
2	Address is not supported or unrecognized.
3	Data is not correct or unrecognized.
4	Failure to execute this function code

[This page intentionally left blank]

Appendix B. Revision History

Add Information	
Description	Related Chapter
Add information of CMC-EIP02	Chapter 08
Add Master-Auxiliary function in parameters: ● Parameter Group 00: 00-04, 00-35, 00-36 ● Parameter Group 02: 02-01 ● Parameter Group 03: 03-00 Add parameter functions: ● Parameter Group 00: 00-20, 00-30 ● Parameter Group 02: 02-76, 02-77 ● Parameter Group 05: 05-51 ● Parameter Group 06: 06-86, 06-88 ● Parameter Group 08: 08-26, 08-66 ● Parameter Group 09: 09-29, 09-32 ● Parameter Group 11: 11-60, 11-42	Chapter 11, 12
Add Fault and Warning Code (DDUE, DDTO)	Chapter 13, 14
Add CANopen object 0x6041 (Software/ Hardware Limit Active bit)	Chapter 15
Add Modbus address	Appendix A

Modified Information	
Description	Related Chapter
Revise Warning prior to installation safety	Foreword
Revise description of isolating main power from ground	Chapter 01
Update specification of main circuit terminals	Chapter 05
Update the installation distance information of brake units	Chapter 07
Revise THDi contents	Chapter 07
Revise EMC model information	Chapter 07
Revise protocol of CMC-EIP01 and CMC-EIP02, and revise specification of EMC-COP01	Chapter 08
Update parameter settings and descriptions: ● Parameter Group 01: 01-34 ● Parameter Group 02: 02-12, 02-75 ● Parameter Group 05: 05-28–05-30 ● Parameter Group 09: 09-30, 09-31	Chapter 11, 12
Revise description of Fault code EcNP	Chapter 14
Revise description of DS402 object 606CH, 6044H	Chapter 15
Revise description of API141 (FPID)	Chapter 16
Revise description of communication format	Appendix A

Smarter. Greener. Together.

Industrial Automation Headquarters

Delta Electronics, Inc.
Taoyuan Technology Center
No.18, Xinglong Rd., Taoyuan District,
Taoyuan City 330477, Taiwan
TEL: +886-3-362-6301 / FAX: +886-3-371-6301

Asia

Delta Electronics (Shanghai) Co., Ltd.
No.182 Minyu Rd., Pudong Shanghai, P.R.C.
Post code : 201209
TEL: +86-21-6872-3988 / FAX: +86-21-6872-3996
Customer Service: 400-820-9595

Delta Electronics (Japan), Inc.
Industrial Automation Sales Department
2-1-14 Shibadaimon, Minato-ku
Tokyo, Japan 105-0012
TEL: +81-3-5733-1155 / FAX: +81-3-5733-1255

Delta Electronics (Korea), Inc.
1511, 219, Gasan Digital 1-Ro., Geumcheon-gu,
Seoul, 08501 South Korea
TEL: +82-2-515-5305 / FAX: +82-2-515-5302

Delta Energy Systems (Singapore) Pte Ltd.
4 Kaki Bukit Avenue 1, #05-04, Singapore 417939
TEL: +65-6747-5155 / FAX: +65-6744-9228

Delta Electronics (India) Pvt. Ltd.
Plot No.43, Sector 35, HSIIDC Gurgaon,
PIN 122001, Haryana, India
TEL: +91-124-4874900 / FAX: +91-124-4874945

Delta Electronics (Thailand) PCL.
909 Soi 9, Moo 4, Bangpoo Industrial Estate (E.P.Z),
Pattana 1 Rd., T.Phraksa, A.Muang,
Samutprakarn 10280, Thailand
TEL: +66-2709-2800 / FAX: +66-2709-2827

Delta Electronics (Australia) Pty Ltd.
Unit 2, Building A, 18-24 Ricketts Road,
Mount Waverley, Victoria 3149 Australia
Mail: IA.au@deltaww.com
TEL: +61-1300-335-823 / +61-3-9543-3720

Americas

Delta Electronics (Americas) Ltd.
5101 Davis Drive, Research Triangle Park, NC 27709, U.S.A.
TEL: +1-919-767-3813 / FAX: +1-919-767-3969

Delta Electronics Brazil Ltd.
Estrada Velha Rio-São Paulo, 5300 Eugênio de
Melo - São José dos Campos CEP: 12247-004 - SP - Brazil
TEL: +55-12-3932-2300 / FAX: +55-12-3932-237

Delta Electronics International Mexico S.A. de C.V.
Gustavo Baz No. 309 Edificio E PB 103
Colonia La Loma, CP 54060
Tlalnepantla, Estado de México
TEL: +52-55-3603-9200

EMEA

Delta Electronics (Netherlands) B.V.
Sales: Sales.IA.EMEA@deltaww.com
Marketing: Marketing.IA.EMEA@deltaww.com
Technical Support: iatechnicalsupport@deltaww.com
Customer Support: Customer-Support@deltaww.com
Service: Service.IA.emea@deltaww.com
TEL: +31(0)40 800 3900

Delta Electronics (Netherlands) B.V.
Automotive Campus 260, 5708 JZ Helmond, The Netherlands
Mail: Sales.IA.Benelux@deltaww.com
TEL: +31(0)40 800 3900

Delta Electronics (Netherlands) B.V.
Coesterweg 45, D-59494 Soest, Germany
Mail: Sales.IA.DACH@deltaww.com
TEL: +49 2921 987 238

Delta Electronics (France) S.A.
ZI du bois Challand 2, 15 rue des Pyrénées,
Lisses, 91090 Evry Cedex, France
Mail: Sales.IA.FR@deltaww.com
TEL: +33(0)1 69 77 82 60

Delta Electronics Solutions (Spain) S.L.U
Ctra. De Villaverde a Vallecas, 265 1º Dcha Ed.
Hormigueras – P.I. de Vallecas 28031 Madrid
TEL: +34(0)91 223 74 20

Carrer Llacuna 166, 08018 Barcelona, Spain
Mail: Sales.IA.Iberia@deltaww.com

Delta Electronics (Italy) S.r.l.
Via Meda 2–22060 Novedrate(CO)
Piazza Grazioli 18 00186 Roma Italy
Mail: Sales.IA.Italy@deltaww.com
TEL: +39 039 8900365

Delta Greentech Elektronik San. Ltd. Sti. (Turkey)
Şerifali Mah. Hendem Cad. Kule Sok. No:16-A
34775 Ümraniye – İstanbul
Mail: Sales.IA.Turkey@deltaww.com
TEL: + 90 216 499 9910

Eltek Dubai (Eltek MEA DMCC)
OFFICE 2504, 25th Floor, Saba Tower 1,
Jumeirah Lakes Towers, Dubai, UAE
Mail: Sales.IA.MEA@deltaww.com
TEL: +971(0)4 2690148

*We reserve the right to change the information in this manual without prior notice.

DELTA_IA-MDS_CH2000_UM_EN_20240401